PNEUMAX

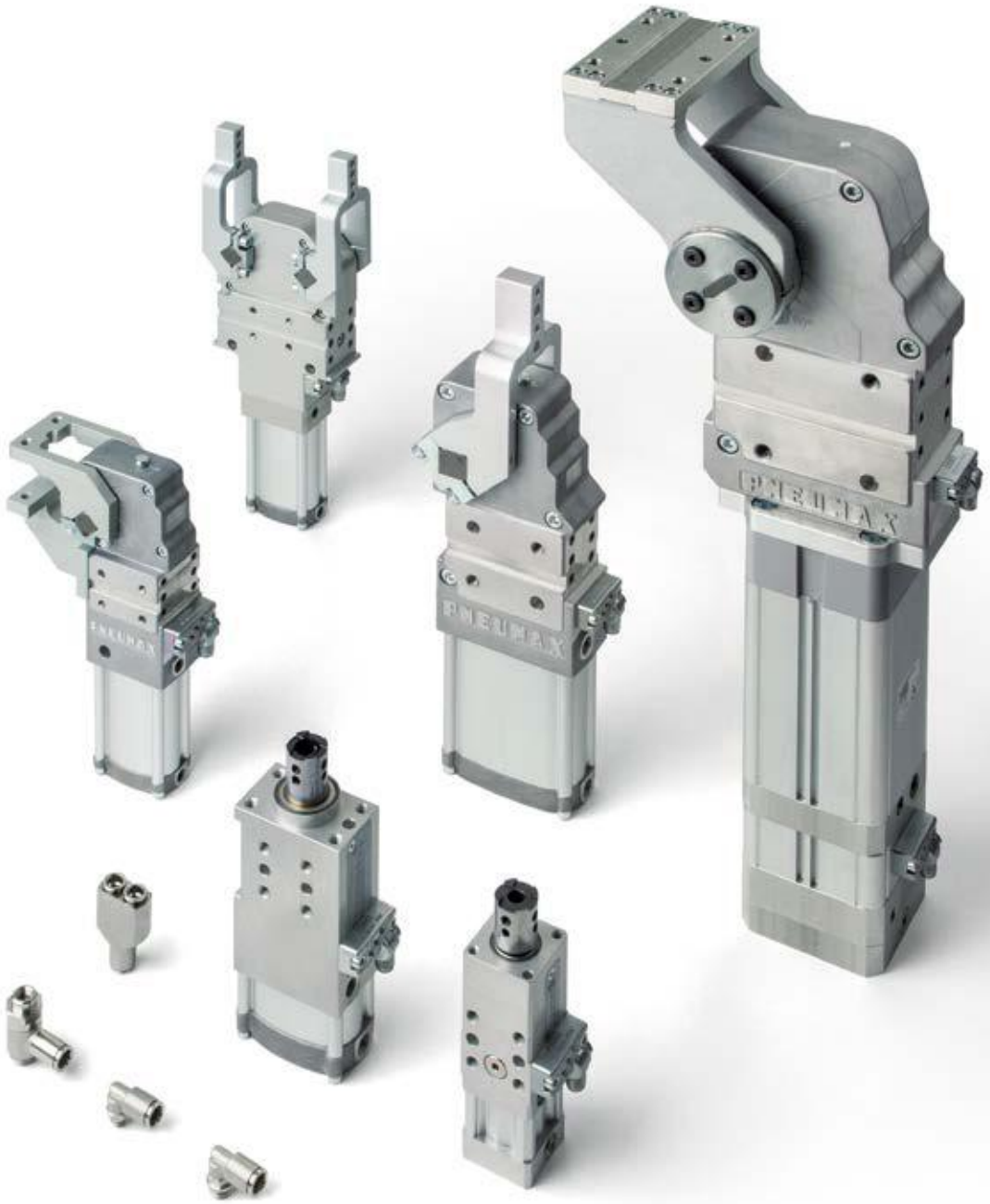

AUTOMOTIVE
CATALOGUE

Automotive Catalogue

The ultimate clamping technology

Innovation begins with Research and Development and extends to industrial processes and business activities, with the ultimate aim of total customer satisfaction.

Pneumax

Smart Technologies and Human Competence

Founded in 1976, **PNEUMAX S.p.A.** is today one of the leading, international manufacturers of components and systems for industrial automation. It is at the fore front of a group of 23 companies, with over 730 employees worldwide.

Ongoing investment in research and development has allowed **Pneumax** to continually expand its range of standard products and customised solutions, adding to the well-established pneumatic technology, a range of electric drive actuators and fluid control components.

Pneumatic Technology

Electric Actuation

Fluid Control

INDUSTRIAL AUTOMATION

Technical information are provided for informative purpose only and can be subject to change without prior notice

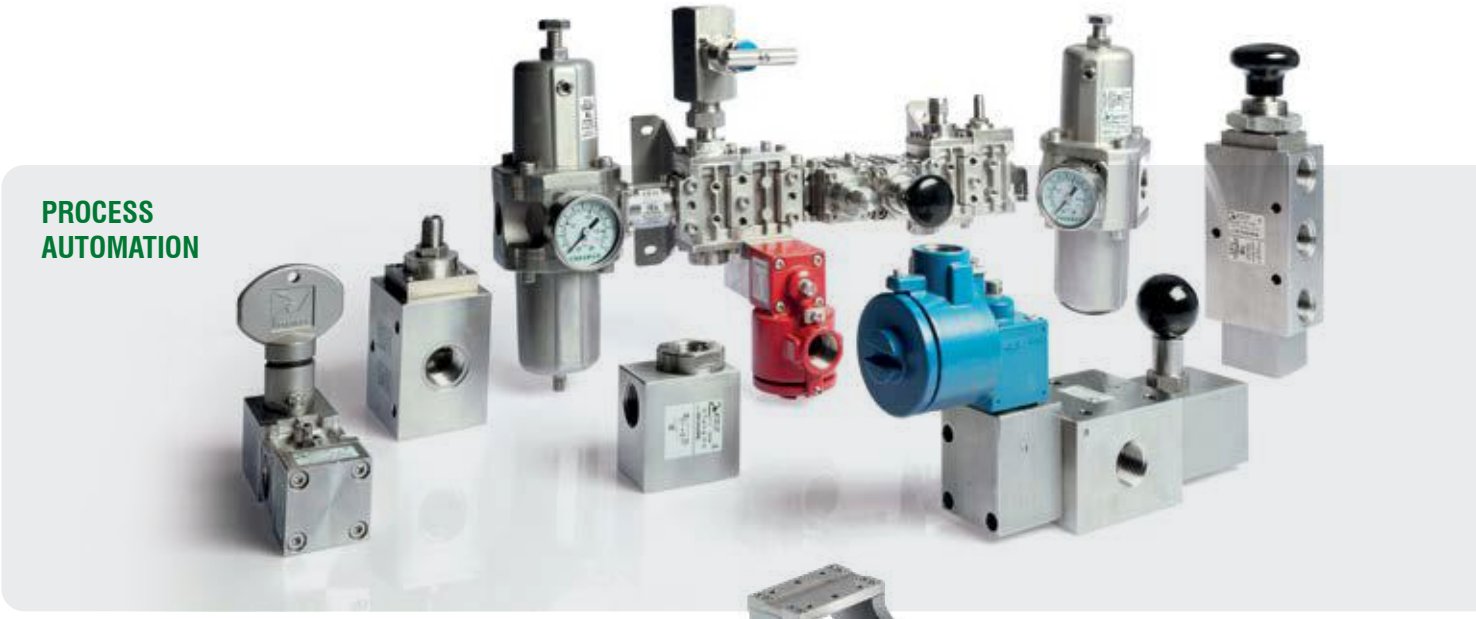

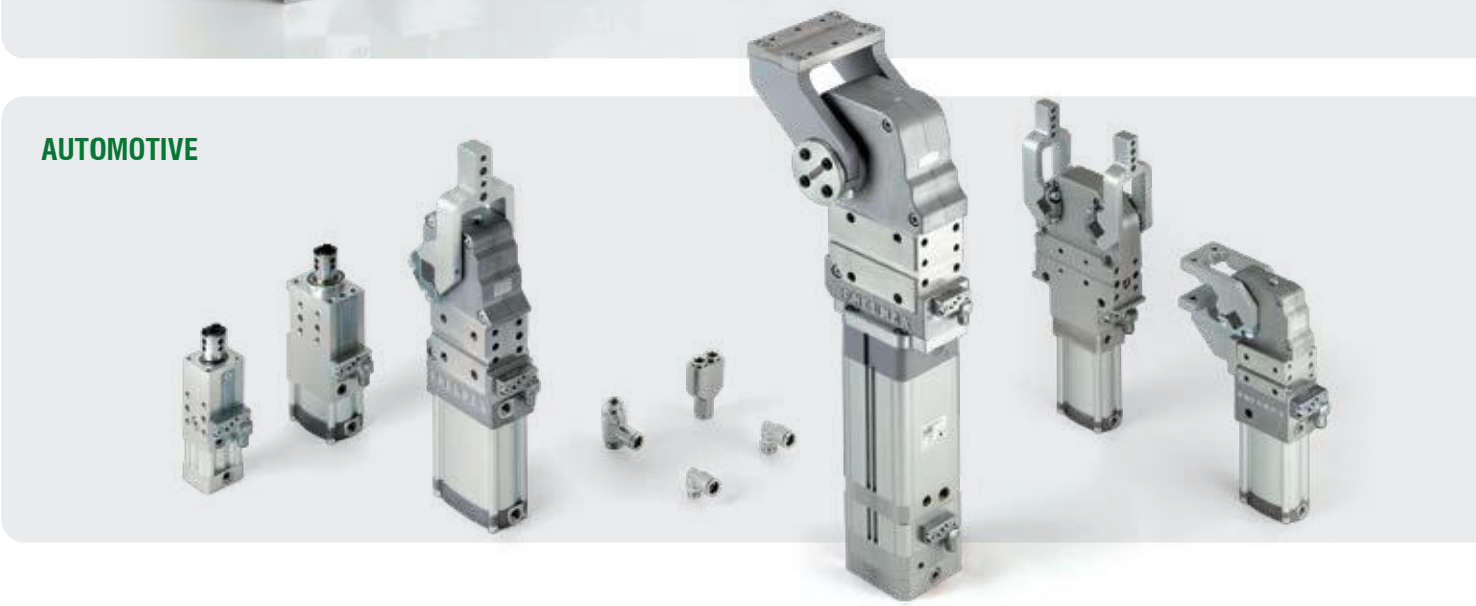

The ability to provide various technologies and solutions for our clients' applications is the main objective of our company, making us the ideal strategic partner.

What defines us is "**Pneumax Business Attitude**", born out of the capacity to combine industry sectors, technology and our application skills via client collaboration with our business sector and product sector specialists. This represents the main distinguishing factor of what Pneumax offers.

The Automotive division

Product development

The Automotive division of Pneumax **designs and manufactures a complete range of products dedicated to the production lines of the automotive field, focusing on Body in White applications**.

Pneumax offers a comprehensive range of clamping units, pivot units, pin packages as well as grippers and complete multi-axis positioning systems.

Developed by a team of specialized technicians, the product is designed to ensure maximum reliability, precision and repeatability in compliance with the latest international mounting standards.

Particular attention has been paid to energy efficiency which through patented designs provides the largest energy saving solutions available in this market.

Every stage of manufacturing and product testing is carried within our specially equipped departments at our headquarters in Lurano (BG).

The worldwide presence of Pneumax ensures optimized and coordinated project management: the highest level of service is provided to all of our international customers.

Market requirement evaluation and product specs definition by product management. The project team analyzes the technical feasibility and sets a general timeline.

1 **CONCEPT**

2 **PROTOTYPING**

After a **structural mechanics simulation analysis**, the R&D team prepares a CAD model which is used with a **3 axis printing-moulding machine** to manufacture the first prototypal batches.

Electronic components are developed and manufactured **in-house** by Pneumax to be integrated in any system or as interface to any protocol.

3 **ELECTRONICS INTEGRATION**

4 **FMEA**

The first close-to-series samples are machined, using the **latest generation machinery**. The first **FMEA** is prepared.

Technical information are provided for informative purpose only and can be subject to change without prior notice

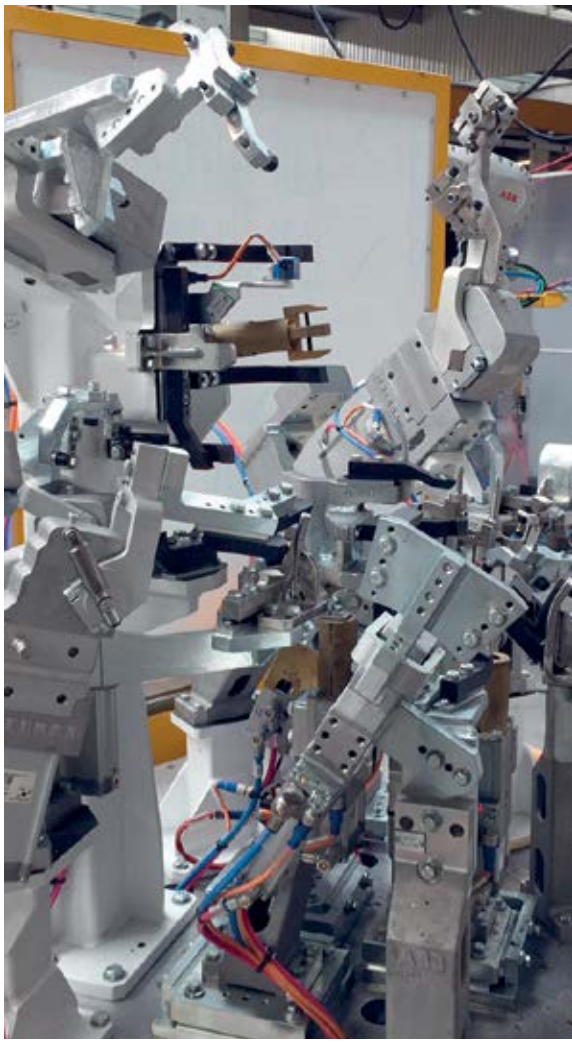

Life test and approval. The products are subjected to **functional**, **performance**, **temperature tests** for millions of cycles.

5 EVALUATION AND INSPECTION

6 ENGINEERING

The engineering department evaluates and adopts the most suitable manufacturing technology and assembly procedure to implement, using **3D simulation programs**.

The industrialization team together with the technical department develop any **specific equipment and tool required**. Suppliers' evaluation is accomplished.

7 PRODUCT INDUSTRIALIZATION

8 PILOT SERIES RELEASE AND PRODUCT AUDIT

Verification and validation that the product meets the requirements.

Product range

Automotive series

Our clamping series features the widest range in clamping moment & stepless adjustable opening in the industry.

Extensive Product Range covering **Clamping**, **Locating**, **Handling**, **Pivoting** functions, with all options required in the **BIW** production lines.

Clamping

C1P25

C1P32

C1P40

C1P45

C1P50

C1P63

C1P80

CB40

CB63

C1D25

C5D32

C1D40

C1D50

C1D63

C1D80

C1M50

C1M63

C5M32

CL25

HC1

C2P50

NAAMS

C2P63

NAAMS

C2P80

NAAMS

C2D50

NAAMS

C2D63

NAAMS

C2D80

NAAMS

HE1P0

HE1P1

HE1P2

HE1P3

HE1P4

HE2P1

NAAMS

HE2P2

NAAMS

HE2P3

NAAMS

C1X40E

C1X50E

C1X63E

C2X50E

NAAMS

C2X63E

NAAMS

ADWI14

ADWI18

Special Clamping products:

Sealed > **Product Series+S**
Example: C1S...,C2S...HE1S...,HE2S...

Technical information are provided for informative purpose only and can be subject to change without prior notice

Locating

RP32 | RA32 | RP50 | RP63 | RT40 | RTD40 | RC50 | RC63 | RCD

CNOMO | CNOMO | CNOMO

RD50 | RM50 | HP50 | FP40 | FP63 | FD63 | FT50 | FTD50

Handling

JP40 | JD40

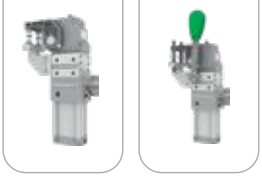

Pivoting

P63 | P80 | P100 | P125

Complementary products

Fittings | Tubes | ISO 15592 cylinders | Compact guided cylinders | Special design product

Accessories

Sensors | Sensor cables | Auto-retaining devices | Shims | Spacers

Technical information are provided for informative purpose only and can be subject to change without prior notice

Index

Automotive series

CLAMPING **10**
- **C1-Series – International mount** 12
- **C2-Series – NAAMS Standard** 37
- **HE1-Series – International mount** 46
- **HE2-Series – NAAMS Standard** 56
- **CX-Series – International and NAAMS mount** 66
- **CS/HES-Series – Sealed clamps International and NAAMS mount** 72
- **CB-Series – Double arm clamps** 73
- **CL-Series – Pneumatic clamp** 79
- **HC-Series – Hydraulic clamps** 82

LOCATING **87**
- **R-Series** 90
- **RT-Series** 108
- **RC-Series** 112
- **HP-Series** 118
- **F-Series** 122
- **FT-Series** 128

HANDLING **134**
- **J-Series** 136

PIVOTING **140**
- **P-Series** 143

MLGA NC LOCATORS **156**

COMPLEMENTARY PRODUCTS **160**
- **Tubes** 161
- **Fittings** 162
- **1390-Series – ISO 15592 cylinders with rodscrapers** 192
- **6110-Series – Compact guided cylinders** 194
- **Special design products** 197

ACCESSORIES **198**
- **Sensor** 199
- **Sensor cable** 201
- **AR-Series – Auto-retaining devices** 202
- **Shims** 208
- **Spacers** 208

ATEX **210**

COMPONENTS FOR THE AUTOMOTIVE INDUSTRY **214**

CLAMPING

Clamping

Stepless adjustment of the opening angle with the quickest set-up time in the market.

The lightest and most compact

Patented

The lightest and most compact

An internal hard stop and a rigid linkage secure **a precise and backlash-free positioning thus enhancing the repeatability of the closed position**.
The toggle mechanism is fully encapsulated within the lightweight aluminum body construction.
Superior needle roller bearings with joints for high load capacity and protection. Protection against any contamination of weld spatter, welding debris and coolants enabling clamps to operate continuously in extreme environments.

3 MLN CYCLES

Maximum structural resistance and fatigue strength.

AR system to maintain the load in the open position without air supply.

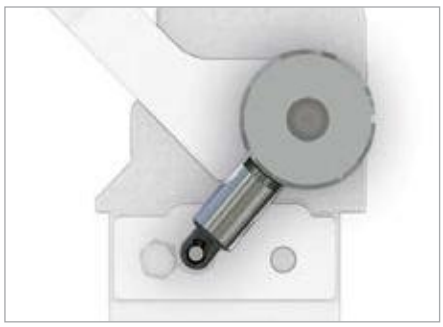

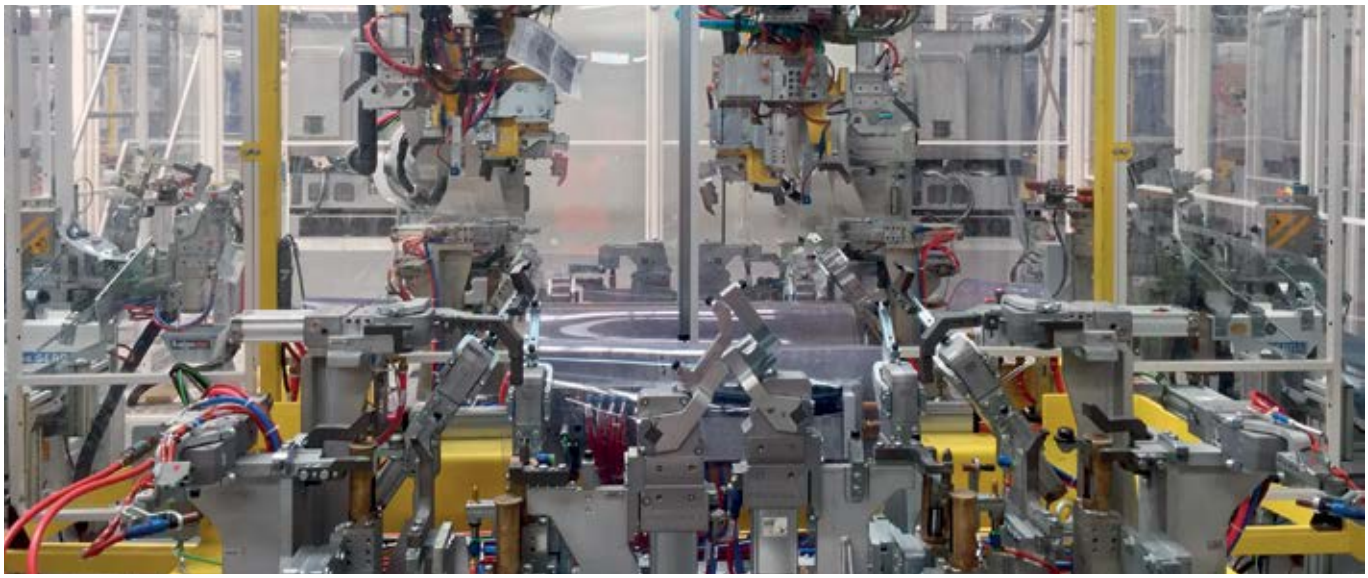

Technical information are provided for informative purpose only and can be subject to change without prior notice

Stepless opening angle adjustment

Easily accessible and simple field adjustment from the rear or front side of the device, with an Allen wrench or a screw gun. A built-in, single-touch opening adjustment, with external access through a recessed detent: no disassembly is ever required.

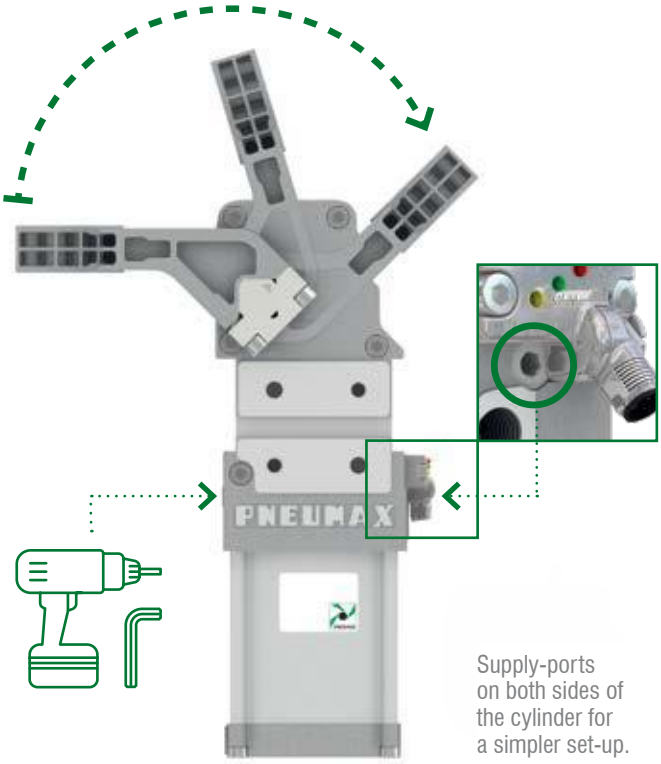

Supply-ports on both sides of the cylinder for a simpler set-up.

Reliable opening adjustment

The opening position is repeatable thanks to an **anti-rotation device** integrated in the piston. The arm selection remains secure. A **retain mechanism** secures the adjustment tool in its seat and prevents the Allen wrench to fall down during the adjustment procedure.

Electronic sensor

One only sensor is used for all products, all sizes and series. EMC compliance to EN 60947-5-2:2007+A1:2012. Swivel connector 0°-90°

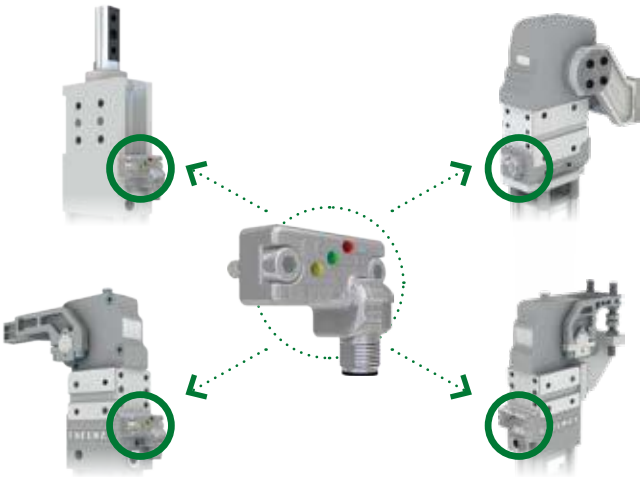

Efficient cushioning system

- **Shorter cycle time**
- **Longer lifetime**
- **Less noise**
- **Less abrupt movements no slamming - no shocks**
- **Less impact forces generated by dynamic stress factor**

Robust & versatile hand lever

Dual shaft output

Sturdy & durable solution with extremely compact and flat dimensions. The integrated manual operation guarantees that the toggle joint is engaged and requires a very low force to reach the irreversible condition.

Patented

Optimal clamping arm-shaft connection and arm structure

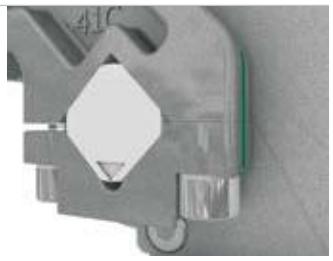

CLAMPING

C1-Series

Pneumatic and manual power clamps
International mount

INTERNATIONAL MOUNT

Pneumax clamps' series have all been developed with a modern and compact design which goes towards **enhancing the operational performances**, such as the cycle time, combined with a very limited total weight without compromising their **strength** and **resistance**.
Thanks to the material chosen for the housings and the clamping arms, a high quality aluminum alloy, as well as due to the compact design of the cylinder and the housings, to minimize any interfering contours, Pneumax devices are **the lightest and most compact power clamps in the market**.

Technical features

Manual release button to open the linkage when air pressure is removed during setup. **Pneumatic ports on both sides** of the cylinder.

Operating features	
Operating pressure	from 2 to 8 bar / from 30 to 115 psi
Lubrication	all the devices are lubricated for life at the factory. Inline air lubrication isn't required

Functional charts

Size 25 mm

- **Air consumption**
  Air consumption for complete cycle (opening and closing)
  REV. 00 - 17/06/2015

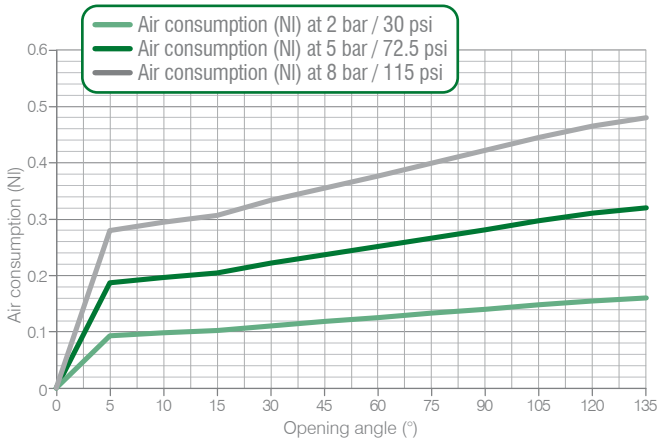

- **Tooling weight chart**
  5 bar operating pressure – 135° opening angle
  REV. 00 - 18/11/2016

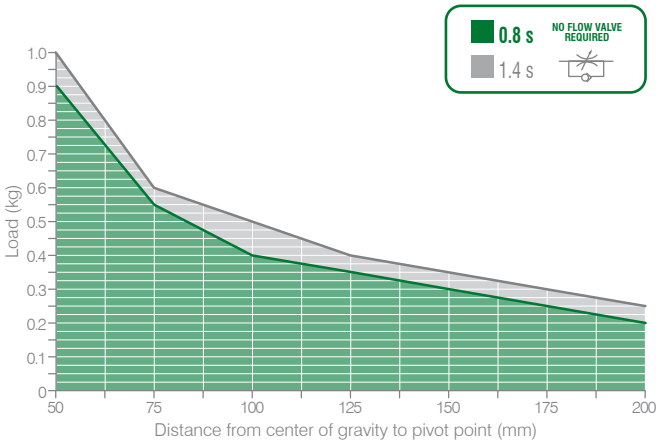

- **Clamping moment (at 5 bar / 72.5 psi)**
  50 N m / 36,87 lb·ft
- **Holding moment**
  75 N m / 55,31 lb·ft
- **Cycle time for max opening angle**
  < 0.8 s

The above data are meant for correct working conditions of the clamp with the same performance level during its life time.
For applications which exceed the above data, please contact our sales representatives.

Technical information are provided for informative purpose only and can be subject to change without prior notice

Size 32 mm

- **Air consumption**
  Air consumption for complete cycle (opening and closing)
  REV. 00 - 17/06/2015

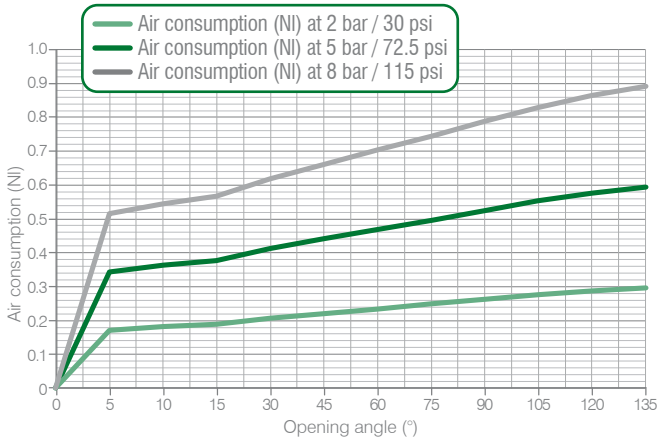

- **Tooling weight chart**
  5 bar operating pressure – 135° opening angle
  REV. 00 - 18/11/2016

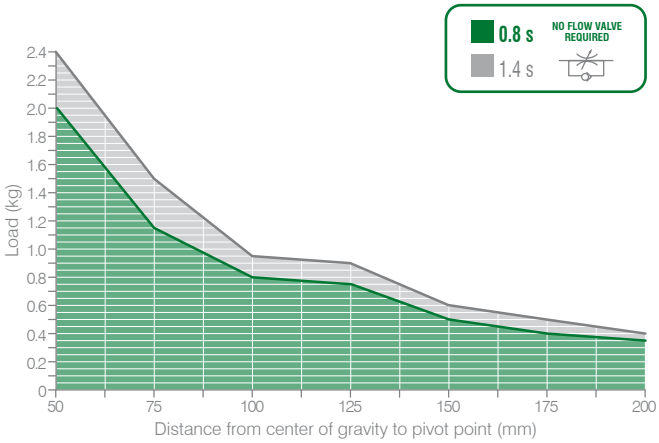

- **Clamping moment (at 5 bar / 72.5 psi)**
  75 N m / 55,31 lb·ft
- **Holding moment**
  250 N m / 184,39 lb·ft
- **Cycle time for max opening angle**
  < 0.8 s

The above data are meant for correct working conditions of the clamp with the same performance level during its life time.
For applications which exceed the above data, please contact our sales representatives.

Size 40 mm

- **Air consumption**
  Air consumption for complete cycle (opening and closing)
  REV. 00 - 17/06/2015

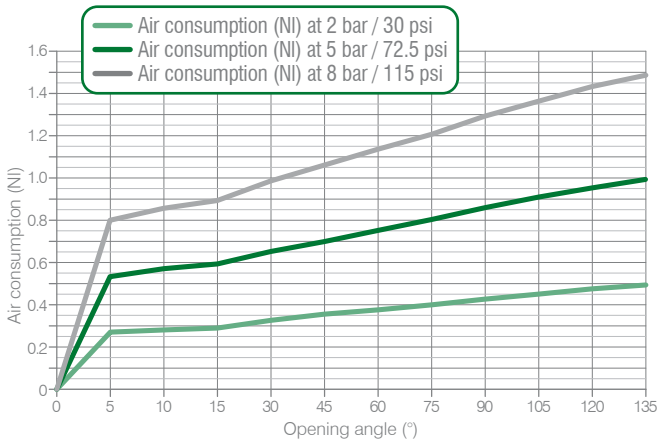

- **Tooling weight chart**
  5 bar operating pressure – 135° opening angle
  REV. 00 - 17/06/2015

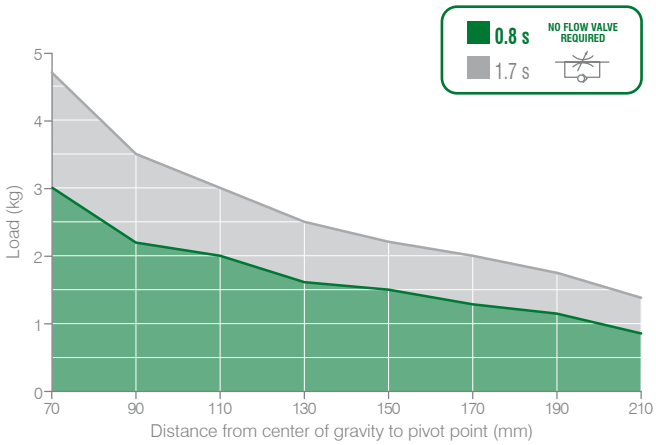

- **Clamping moment (at 5 bar / 72.5 psi)**
  130 N m / 95,88 lb·ft
- **Holding moment**
  380 N m / 280,27 lb·ft

The above data are meant for correct working conditions of the clamp with the same performance level during its life time.
For applications which exceed the above data, please contact our sales representatives.

C1-Series / Functional charts (continued)

Series 45 - size 40 interchangeable to size 50 and 63 mm

- **Air consumption**
  Air consumption for complete cycle (opening and closing)
  REV. 00 - 16/06/2015

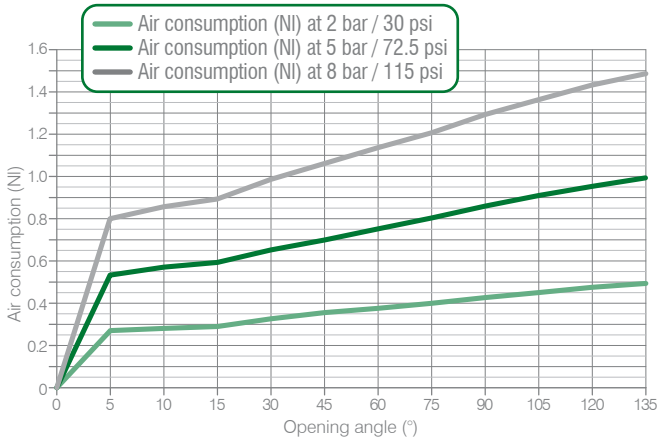

- **Tooling weight chart**
  5 bar operating pressure – 135° opening angle
  REV. 00 - 16/06/2015

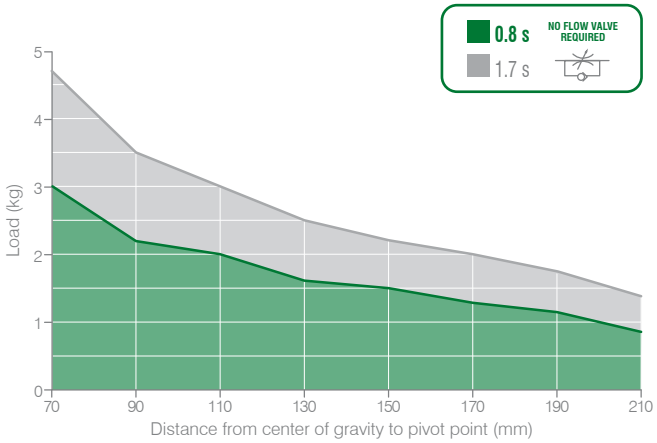

- **Clamping moment (at 5 bar / 72.5 psi)**
  130 N m/ 95,88 lb·ft

- **Holding moment**
  380 N m/ 280,25 lb·ft

The above data are meant for correct working conditions of the clamp with the same performance level during its life time.
For applications which exceed the above data, please contact our sales representatives.

Size 50 mm

- **Air consumption**
  Air consumption for complete cycle (opening and closing)
  REV. 00 - 16/06/2015

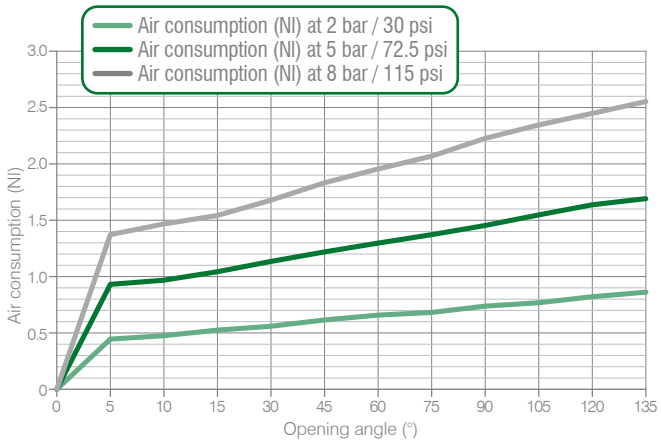

- **Tooling weight chart**
  5 bar operating pressure – 135° opening angle
  REV. 00 - 16/06/2015

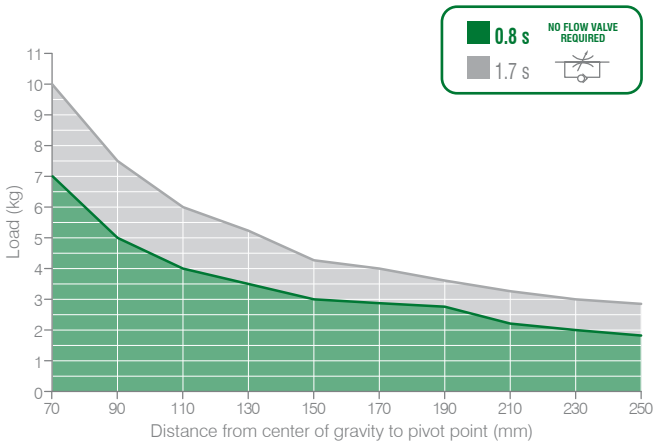

- **Clamping moment (at 5 bar / 72.5 psi)**
  185 N m / 136,44 lb·ft

- **Holding moment**
  800 N m / 590,04 lb·ft

The above data are meant for correct working conditions of the clamp with the same performance level during its life time.
For applications which exceed the above data, please contact our sales representatives.

Technical information are provided for informative purpose only and can be subject to change without prior notice

Size 63 mm

- **Air consumption**
  Air consumption for complete cycle (opening and closing)
  REV. 00 - 17/06/2015

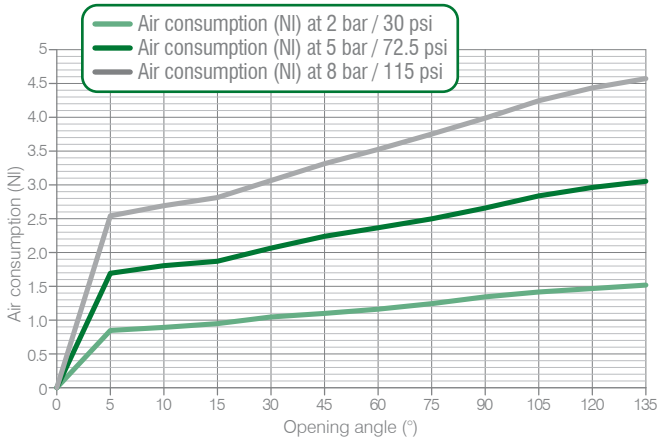

- **Tooling weight chart**
  5 bar operating pressure – 135° opening angle
  REV. 00 - 17/06/2015

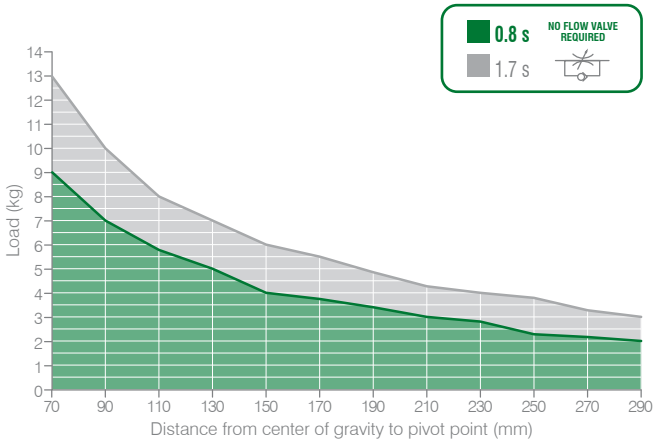

- **Clamping moment (at 5 bar / 72.5 psi)**
  390 N m / 287,64 lb·ft

- **Holding moment**
  1.500 N m / 1.106,34 lb·ft

The above data are meant for correct working conditions of the clamp with the same performance level during its life time.
For applications which exceed the above data, please contact our sales representatives.

Size 80 mm

- **Air consumption**
  Air consumption for complete cycle (opening and closing)
  REV. 00 - 29/05/2015

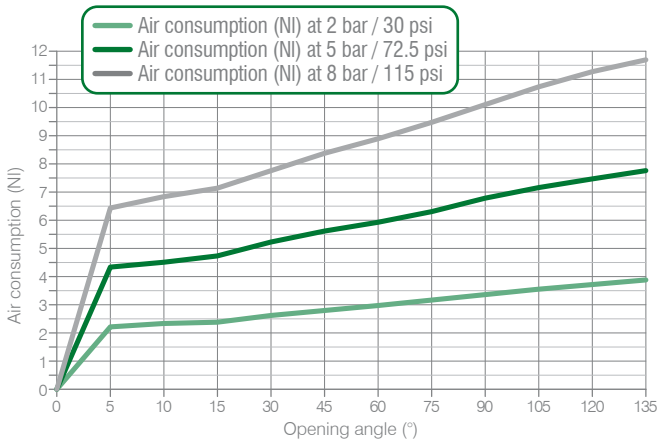

- **Tooling weight chart**
  5 bar operating pressure – 135° opening angle
  REV. 00 - 29/05/2016

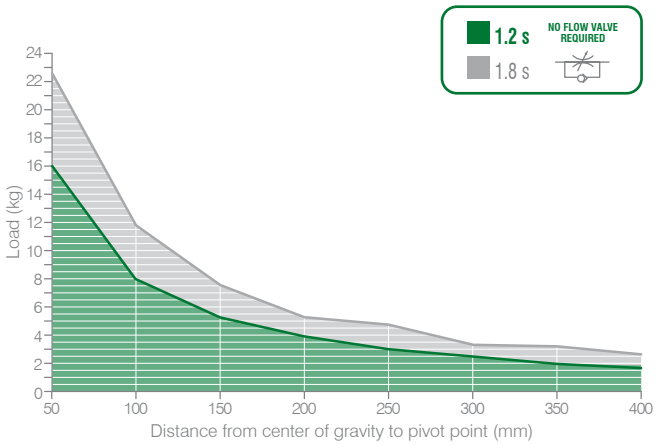

- **Clamping moment (at 5 bar / 72.5 psi)**
  850 N m / 626,92 lb·ft

- **Holding moment**
  2.500 N m / 1.843,90 lb·ft

The above data are meant for correct working conditions of the clamp with the same performance level during its life time.
For applications which exceed the above data, please contact our sales representatives.

CLAMPING

C1-Series / Ordering string

Nano Power Clamps

C	1	P	25	E	G	1	A	01

C	VERSION	**C** = clamp
1	MOUNTING PATTERN	**1** = international mount
P	OPERATION	**P** = pneumatic **D2** = pneumatic with manual operation (size 32 mm please see C5 Series) **D0** = output shaft for manual operation - no lever and no handle included (size 32 mm please see C5 Series)
25	SIZE	**25** = Ø 25 mm **32** = Ø 32 mm
E	SENSOR	**E** = electronic sensor with M12 swivel connector - PNP **A** = electronic sensor with M12 swivel connector - NPN **N** = no sensor **B** = electronic sensor with M8 swivel connector - PNP
G	PORTS	**G** = G thread – BSPP
1	ARM MOUNT	**1** = **2** = **3** = **4** =
A	ARM MATERIAL	**A** = aluminum
01	CLAMP ARM TYPE	**01** = wishbone, central, 0 mm offset **04** = wishbone, central, 10 mm offset **13** = H, 0 mm offset **14** = H, 10 mm offset

C5-Series

C	5	D2	32	E	4	1	A	01

C	VERSION	**C** = clamp
5	MOUNTING PATTERN	**5** = heavy duty style
D2	OPERATION	**M2** = manual Ø 32 **D2** = pneumatic with manual operation
32	SIZE	**32** = size 32 mm
E	SENSOR	**E** = electronic sensor with M12 swivel connector - PNP **A** = electronic sensor with M12 swivel connector - NPN **N** = no sensor **B** = electronic sensor with M8 swivel connector - PNP
4	FIXED OPENING ANGLE	**1** = 135° **2** = 120° **5** = 55° **7** = 20°
1	ARM MOUNT	**1** = **2** = **3** = **4** =
A	ARM MATERIAL	**A** = aluminum
01	CLAMP ARM TYPE	**01** = wishbone, central, 0 mm offset **04** = wishbone, central, 10 mm offset **13** = H, 0 mm offset **14** = H, 10 mm offset

Technical information are provided for informative purpose only and can be subject to change without prior notice

Please see the charts in the datasheets for arm position as well as for max. opening angle

C1-Series

C	1	P	40	E	G	4	A	01

C	**VERSION**	**C** = clamp
1	**MOUNTING PATTERN**	**1** = International mount
P	**OPERATION**	**P** = pneumatic **D_** = pneumatic with manual operation **D0** = output shaft for manual operation - no lever and no handle included
40	**SIZE**	**40** = Ø 40 mm **63** = Ø 63 mm **50** = Ø 50 mm **80** = Ø 80 mm
E	**SENSOR**	**E** = electronic sensor with M12 swivel connector - PNP **A** = electronic sensor with M12 swivel connector - NPN **N** = no sensor **B** = electronic sensor with M8 swivel connector - PNP
G	**PORTS**	**G** = G thread – BSPP **N** = NPT
4	**ARM MOUNT**	**1** = **2** = **3** = **4** =
A	**ARM MATERIAL**	**A** = aluminum **S** = steel
01	**CLAMP ARM TYPE** * for size 80 mm = 20 mm offset	**01** = wishbone, central, 15 mm offset* **04** = wishbone, central, 45 mm offset **02** = wishbone, right, 15 mm offset* **05** = wishbone, right, 45 mm offset **03** = wishbone, left, 15 mm offset* **06** = wishbone, left, 45 mm offset

C1P45-Series

C	1	P	45	E	G	1	A	54

C	**VERSION**	**C** = clamp
1	**MOUNTING PATTERN**	**1** = International mount
P	**OPERATION**	**P** = pneumatic
45	**SIZE**	**45** = Ø 40 mm Mounting pattern interchangeable to 50 and 63 mm bore clamps
E	**SENSOR**	**E** = electronic sensor with M12 swivel connector - PNP **A** = electronic sensor with M12 swivel connector - NPN **N** = no sensor **B** = electronic sensor with M8 swivel connector - PNP
G	**PORTS**	**G** = G thread – BSPP
1	**ARM MOUNT**	**1** = **2** = **4** =
A	**ARM MATERIAL**	**A** = aluminum
54	**CLAMP ARM TYPE**	**54** = wishbone, central, 45 mm offset **55** = wishbone, right, 45 mm offset **56** = wishbone, left, 45 mm offset

CLAMPING

C1M-Series

C	1	M2	50	E	4	1	A	1

C	**VERSION**	**C** = clamp
1	**MOUNTING PATTERN**	**1** = international mount
M2	**OPERATION**	**M1** = manual with straight handle **M2** = manual with “D2” handle
50	**SIZE**	**50** = size 50 mm **63** = size 63 mm
E	**SENSOR**	**E** = electronic sensor with M12 swivel connector - PNP **A** = electronic sensor with M12 swivel connector - NPN **N** = no sensor **B** = electronic sensor with M8 swivel connector - PNP
4	**FIXED OPENING ANGLE**	**1** = 135° **2** = 120° **3** = 90° **4** = 60° **5** = 45° **6** = 55° **7** = 20°
1	**ARM MOUNT**	**1** = **2** = **3** = **4** =
A	**ARM MATERIAL**	**A** = aluminum
1	**CLAMP ARM TYPE**	**01** = wishbone, central, 15 mm offset **04** = wishbone, central, 45 mm offset For the other arm types, see ordering string of C1 series

Technical information are provided for informative purpose only and can be subject to change without prior notice

CLAMPING

C1P25E / **Nano Power clamp** - International mount - 25 mm bore

WEIGHT 0.75 kg

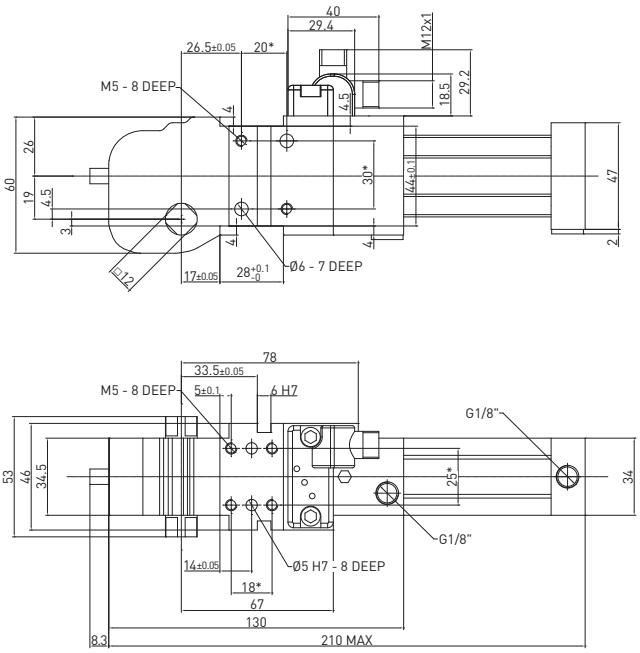

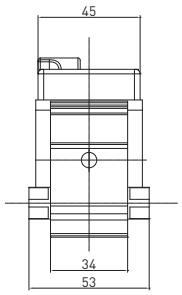

* DIMENSIONAL TOLERANCE
FOR DOWEL HOLES: ±0.02

DIMENSIONAL TOLERANCE
FOR THREADED HOLES: ±0.1

REV. 01 - 30/03/2021

C1D225E / **Nano Power clamp** - International mount - 25 mm bore with manual operation

WEIGHT 0.987 kg
D2 handle included

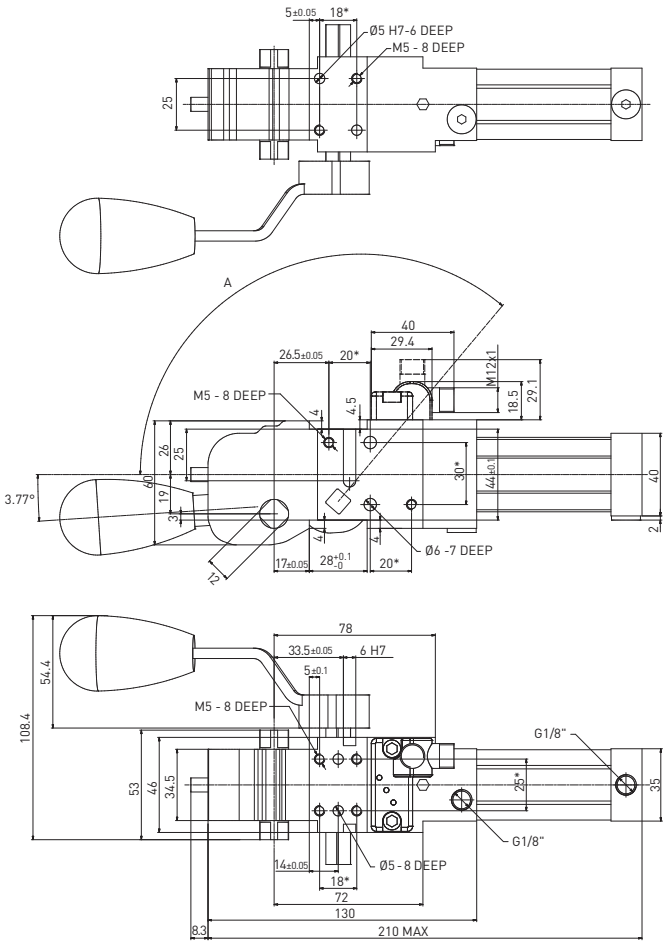

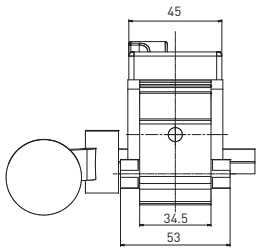

Handle swivel angle

Arm opening angle	A Handle swivel angle
0°	-3,77°
15°	19°
30°	35°
45°	53°
60°	74°
75°	94°
90°	109,5°
105°	120°
120°	126°
135°	130°

Max Hand Force: 200 N

* DIMENSIONAL TOLERANCE
FOR DOWEL HOLES: ±0.02

DIMENSIONAL TOLERANCE
FOR THREADED HOLES: ±0.1

REV. 03 - 27/10/2021

Clamping arms / 12 mm shaft for clamps' size 25 mm

REV. 02 - 07/10/2015

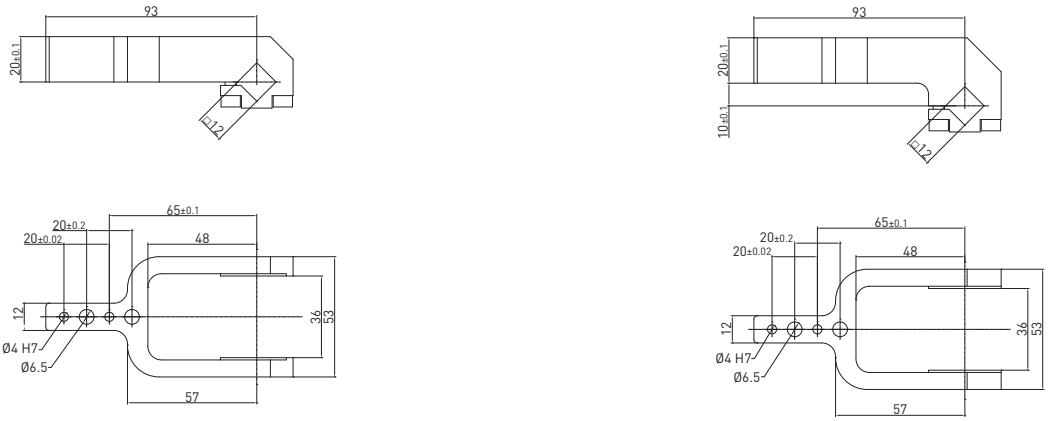

12 mm shaft – 0 mm offset

Part no.	Material	Version	Weight (kg)	Max op. angle pos. 1	Max op. angle pos. 2	Max op. angle pos. 3	Max op. angle pos. 4
B12012	**Aluminum**	**Central**	**0.127**	**135°**	**105°**	**135°**	**90°**

Screws: M5x14 **Tightening torque:** 5 N m / 3.68 lb ft

12 mm shaft – 10 mm offset

Part no.	Material	Version	Weight (kg)	Max op. angle pos. 1	Max op. angle pos. 2	Max op. angle pos. 3	Max op. angle pos. 4
B12042	**Aluminum**	**Central**	**0.135**	**135°**	**120°**	**N/A**	**45°**

Screws: M5x14 **Tightening torque:** 5 N m / 3.68 lb ft

Clamping arms / 12 mm shaft for clamps' size 25 mm and size 32 mm mm - Left & right clamping surfaces

REV. 00 - 12/04/2017

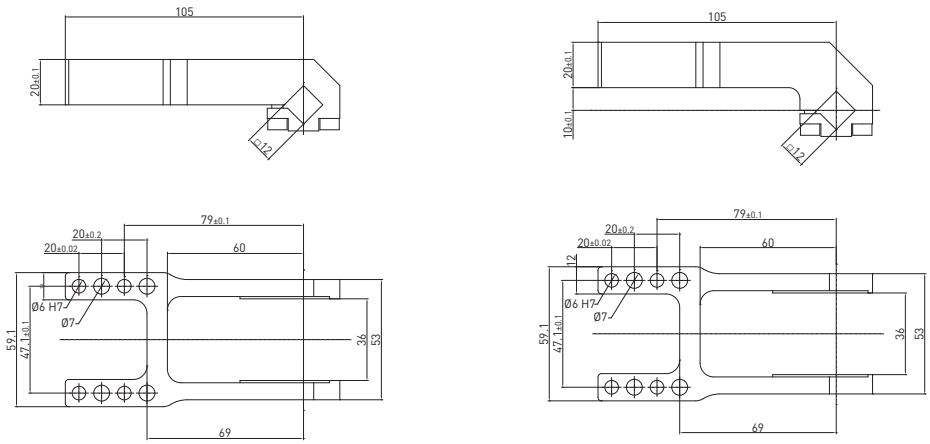

12 mm shaft – 0 mm offset

Part no.	Material	Version	Weight (kg)	Max op. angle pos. 1	Max op. angle pos. 2	Max op. angle pos. 3	Max op. angle pos. 4
B1213	**Aluminum**	**H**	**0.163**	**135°**	**115°**	**N/A**	**45°**

Screws: M5x14 **Tightening torque:** 5 N m / 3.68 lb ft

12 mm shaft – 10 mm offset

Part no.	Material	Version	Weight (kg)	Max op. angle pos. 1	Max op. angle pos. 2	Max op. angle pos. 3	Max op. angle pos. 4
B1214	**Aluminum**	**H**	**0.173**	**135°**	**115°**	**N/A**	**45°**

Screws: M5x14 **Tightening torque:** 5 N m / 3.68 lb ft

Technical information are provided for informative purpose only and can be subject to change without prior notice

Clamping arms / 12 mm shaft for clamps' size 25 mm

REV. 00 - 11/02/2022

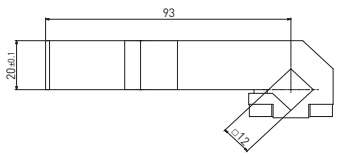

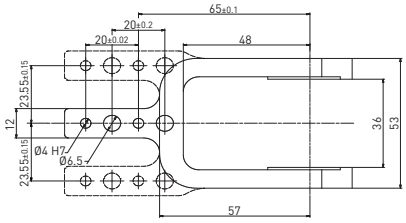

12 mm shaft – 0 mm offset

Part no.	Material	Version	Weight (kg)	Max op. angle pos. 1	Max op. angle pos. 2	Max op. angle pos. 3	Max op. angle pos. 4
B12022	Aluminum	Right	0.127	135°	105°	135°	90°
B12032	Aluminum	Left	0.127	135°	105°	135°	90°

Screws: M5x14 **Tightening torque:** 5 N m / 3.68 lb ft

Clamping arms / 12 mm shaft for clamps' size 32 mm

REV. 00 - 11/02/2022

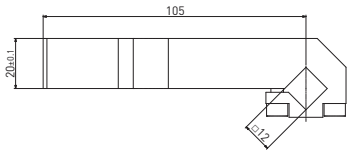

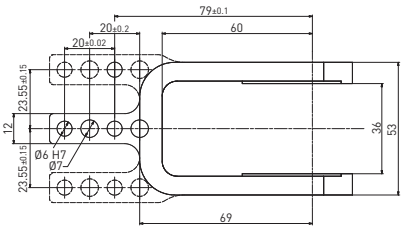

12 mm shaft – 0 mm offset

Part no.	Material	Version	Weight (kg)	Max op. angle pos. 1	Max op. angle pos. 2	Max op. angle pos. 3	Max op. angle pos. 4
B12023	Aluminum	Right	0.135	135°	112°	135°	90°
B12033	Aluminum	Left	0.135	135°	112°	135°	90°

Screws: M5x14 **Tightening torque:** 5 N m / 3.68 lb ft

C1P32E / **Nano Power clamp** - International mount - 32 mm bore

WEIGHT 0.987 kg

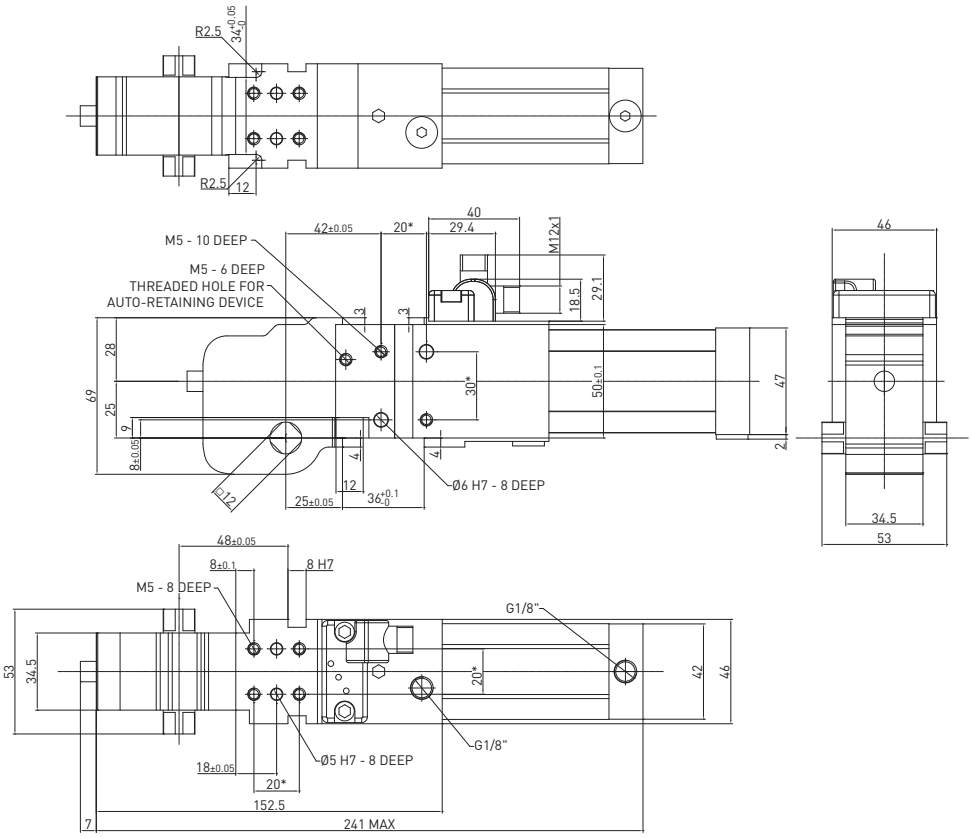

* DIMENSIONAL TOLERANCE FOR DOWEL HOLES: ±0.02

DIMENSIONAL TOLERANCE FOR THREADED HOLES: ±0.1

REV. 02 - 13/09/2017

C5D232E / **Nano Power clamp** - heavy duty style - International mount - 32 mm bore with manual operation

WEIGHT 1.36 kg

D2 handle included

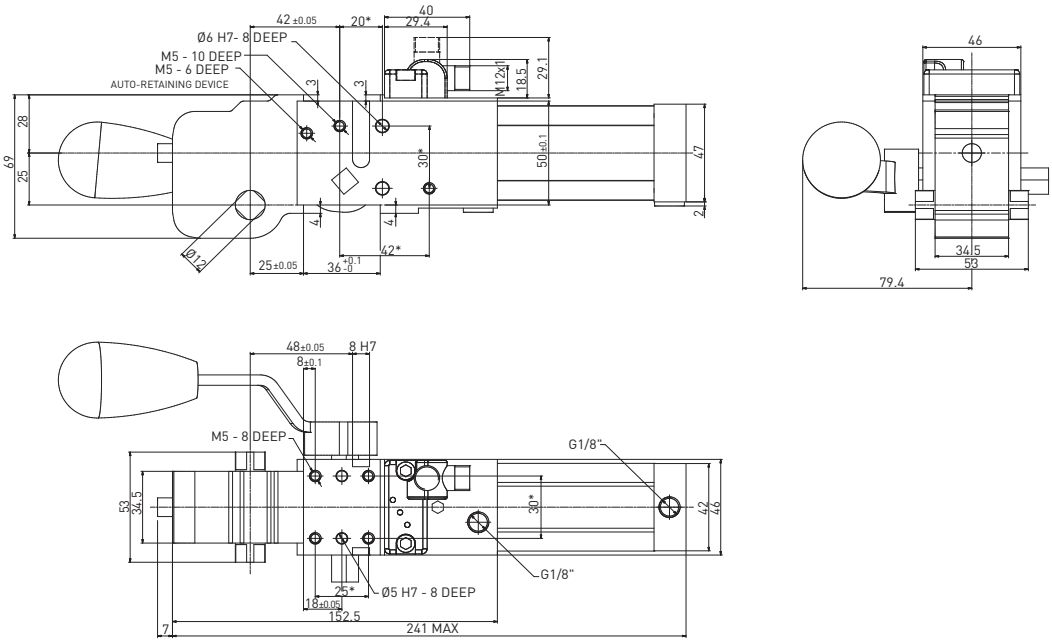

Handle swivel angle

Arm opening angle	A Handle swivel angle
0°	3.5°
15°	28.5°
30°	45°
45°	68°
60°	90.5°
75°	115.5°
90°	130°
105°	139°
120°	144°
135°	147°

Max Hand Force: 200 N

* DIMENSIONAL TOLERANCE FOR DOWEL HOLES: ±0.02

DIMENSIONAL TOLERANCE FOR THREADED HOLES: ±0.1

REV. 00 - 06/10/2020

Technical information are provided for informative purpose only and can be subject to change without prior notice

C1P32E_ _A / **Nano Power clamp** - International mount - 32 mm bore

WEIGHT 0.98 kg

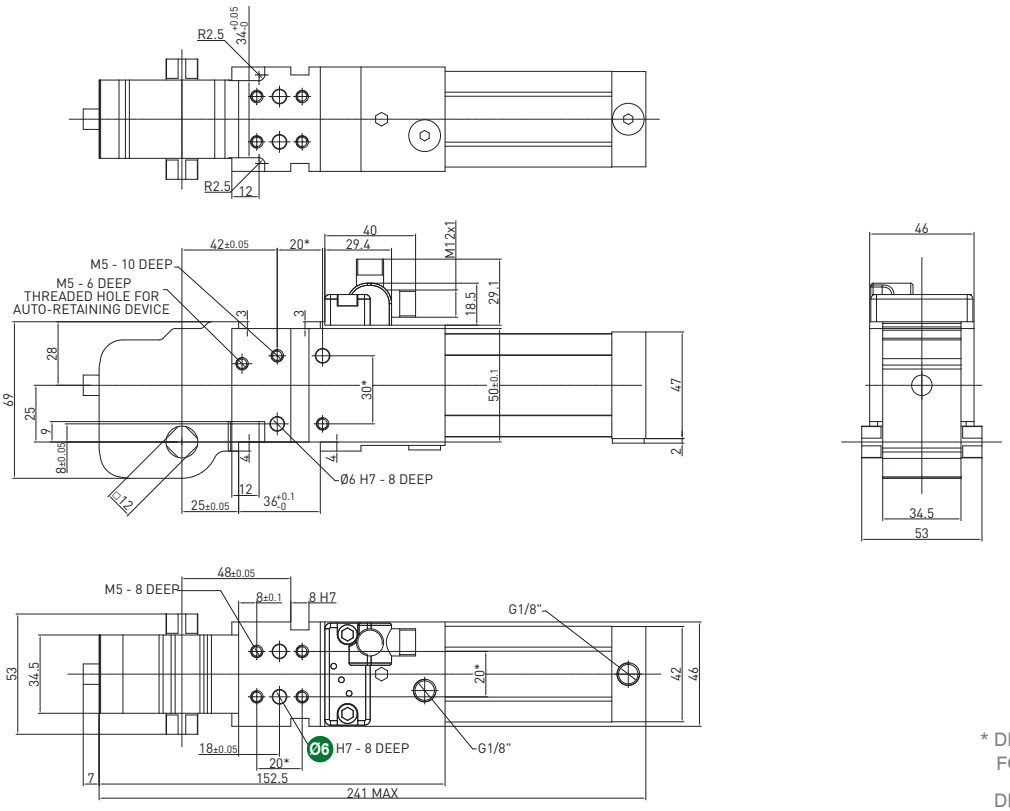

* DIMENSIONAL TOLERANCE
FOR DOWEL HOLES: ±0.02

DIMENSIONAL TOLERANCE
FOR THREADED HOLES: ±0.1

REV. 00 - 28/08/2017

C5M232E / **Nano Power clamp** - International mount - 32 mm bore

WEIGHT 1 kg
D2 handle included

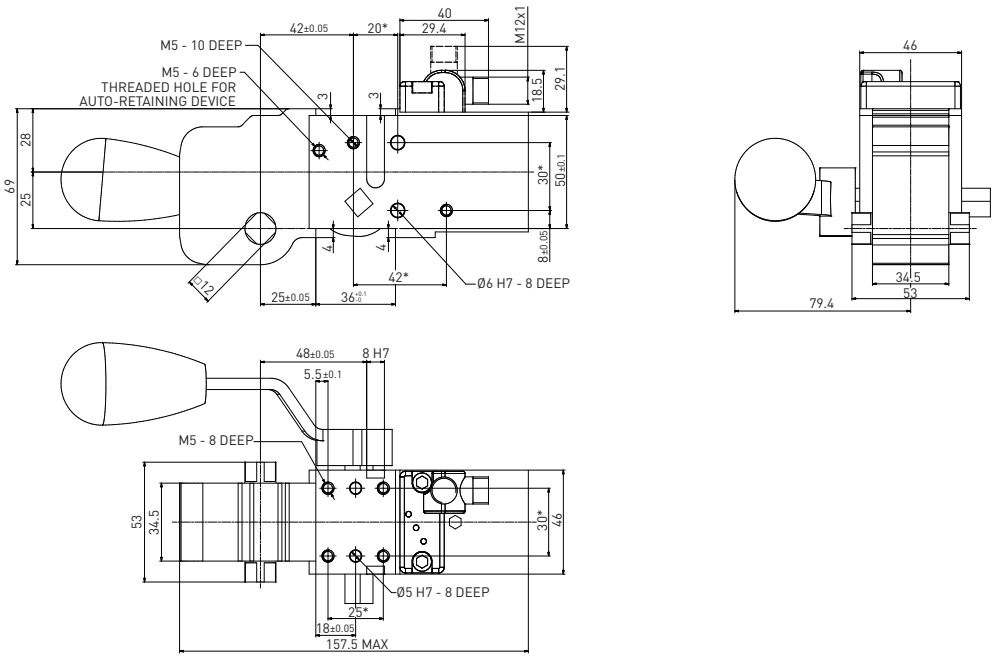

Handle swivel angle

Arm opening angle	A Handle swivel angle
0°	3.5°
15°	28.5°
30°	45°
45°	68°
60°	90.5°
75°	115.5°
90°	130°
105°	139°
120°	144°
135°	147°

Max Hand Force: 200 N

* DIMENSIONAL TOLERANCE
FOR DOWEL HOLES: ±0.02

DIMENSIONAL TOLERANCE
FOR THREADED HOLES: ±0.1

REV. 00 - 06/10/2020

Clamping arms / 12 mm shaft for clamps' size 32 mm

REV. 00 - 07/10/2015

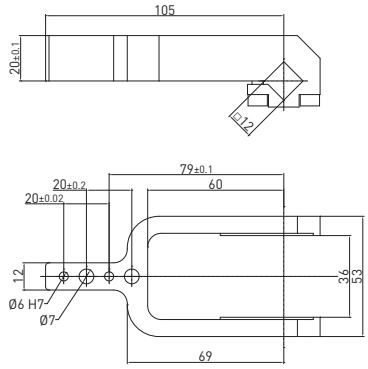

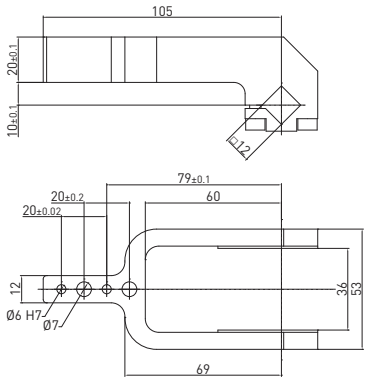

12 mm shaft – 0 mm offset

Part no.	Material	Version	Weight (kg)	Max op. angle pos. 1	Max op. angle pos. 2	Max op. angle pos. 3	Max op. angle pos. 4
B12013	**Aluminum**	**Central**	**0.135**	**135°**	**112°**	**135°**	**90°**

Screws: M5x14 **Tightening torque:** 5 N m / 3.68 lb ft

12 mm shaft – 10 mm offset

Part no.	Material	Version	Weight (kg)	Max op. angle pos. 1	Max op. angle pos. 2	Max op. angle pos. 3	Max op. angle pos. 4
B12043	**Aluminum**	**Central**	**0.144**	**135°**	**123°**	**N/A**	**45°**

Screws: M5x14 **Tightening torque:** 5 N m / 3.68 lb ft

Clamping arms / 12 mm shaft for clamps' size 25 mm and size 32 mm mm - Left & right clamping surfaces

REV. 00 - 12/04/2017

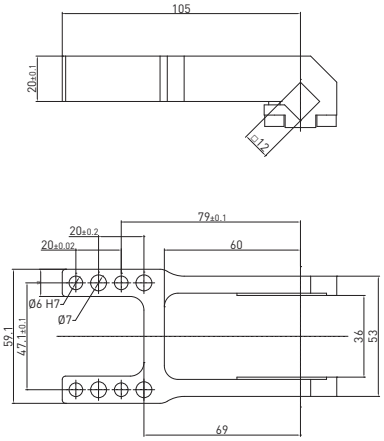

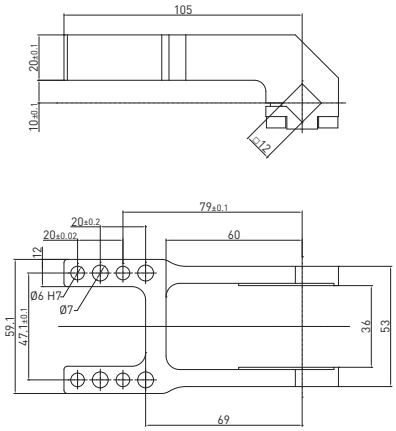

12 mm shaft – 0 mm offset

Part no.	Material	Version	Weight (kg)	Max op. angle pos. 1	Max op. angle pos. 2	Max op. angle pos. 3	Max op. angle pos. 4
B1213	**Aluminum**	**H**	**0.163**	**135°**	**115°**	**N/A**	**45°**

Screws: M5x14 **Tightening torque:** 5 N m / 3.68 lb ft

12 mm shaft – 10 mm offset

Part no.	Material	Version	Weight (kg)	Max op. angle pos. 1	Max op. angle pos. 2	Max op. angle pos. 3	Max op. angle pos. 4
B1214	**Aluminum**	**H**	**0.173**	**135°**	**115°**	**N/A**	**45°**

Screws: M5x14 **Tightening torque:** 5 N m / 3.68 lb ft

Technical information are provided for informative purpose only and can be subject to change without prior notice

CLAMPING

C1P40E / **Power clamp** - International mount - 40 mm bore

WEIGHT 1.45 kg

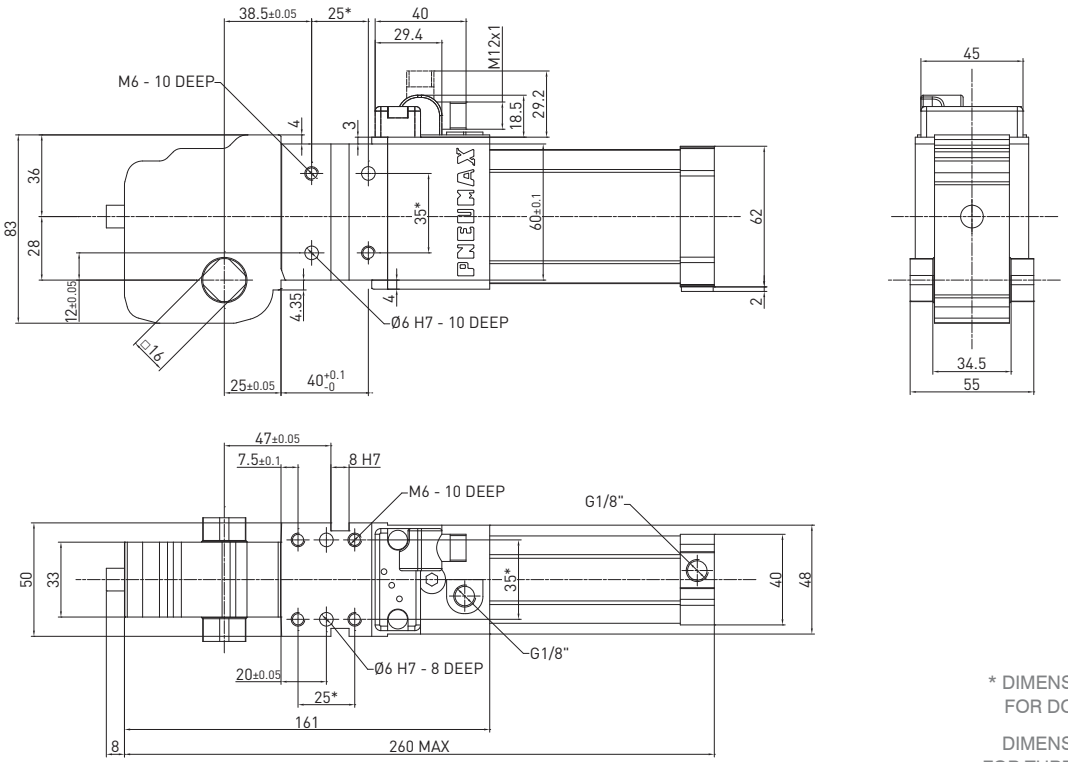

* DIMENSIONAL TOLERANCE FOR DOWEL HOLES: ±0.02

DIMENSIONAL TOLERANCE FOR THREADED HOLES: ±0.1

REV. 00 - 31/03/2015

C1D_40E / **Power clamp** - International mount - 40 mm bore with manual operation

WEIGHT 1.75 kg
D2 handle included

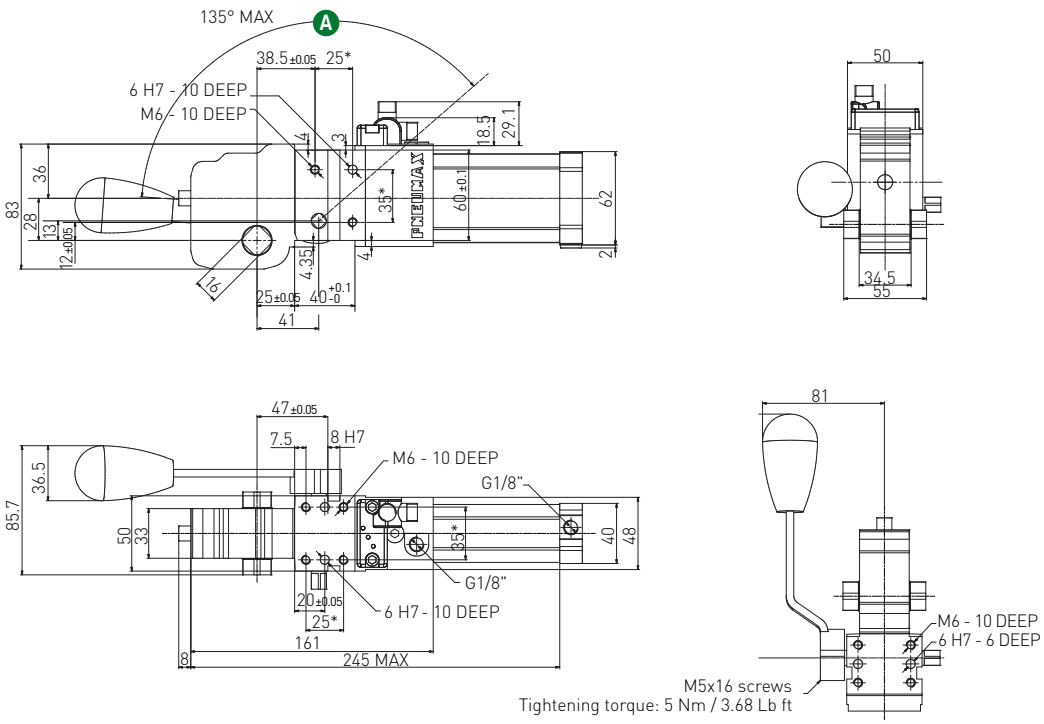

D1 version

D2 version

Handle swivel angle

Arm opening angle	A Handle swivel angle
0°	4.12°
15°	22.65°
30°	38.2°
45°	58.4°
60°	83.6°
75°	107.6°
90°	123.6°
105°	132.75°
120°	137.7°
135°	140°

Max Hand Force: 200 N

* DIMENSIONAL TOLERANCE FOR DOWEL HOLES: ±0.02

DIMENSIONAL TOLERANCE FOR THREADED HOLES: ±0.1

REV. 01 - 03/05/2022

Clamping arms / 16 mm shaft

REV. 00 - 31/03/2015

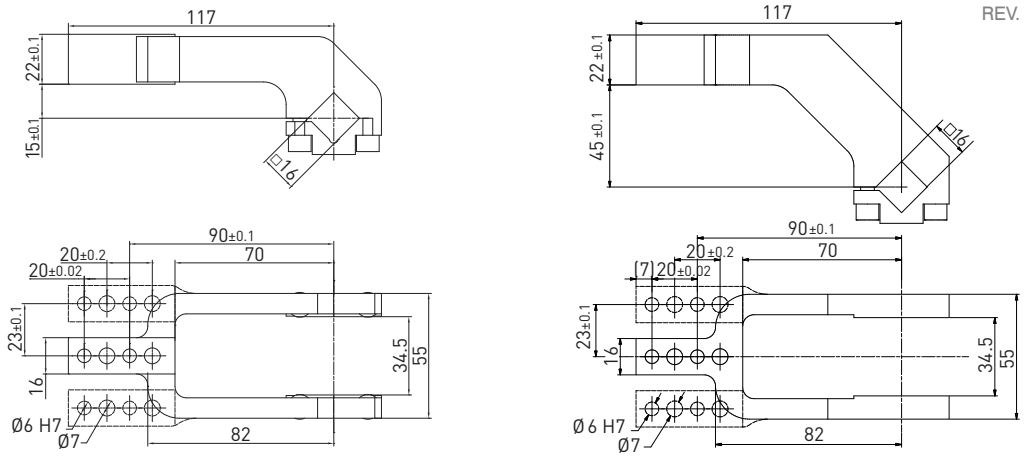

16 mm shaft – 15 mm offset

Part no.	Material	Version	Weight (kg)	Max op. angle pos. 1	Max op. angle pos. 2	Max op. angle pos. 3	Max op. angle pos. 4
B1601	Aluminum	Central	0.24	135°	125°	N/A	45°
Q1601	Steel	Central	0.44	135°	125°	N/A	45°
B1602	Aluminum	Right	0.24	135°	125°	N/A	45°
Q1602	Steel	Right	0.46	135°	125°	N/A	45°
B1603	Aluminum	Left	0.24	135°	125°	N/A	45°
Q1603	Steel	Left	0.46	135°	125°	N/A	45°

Screws: M6x20 **Tightening torque:** 10 N m / 7.37 lb ft

16 mm shaft – 45 mm offset

Part no.	Material	Version	Weight (kg)	Max op. angle pos. 1	Max op. angle pos. 2	Max op. angle pos. 3	Max op. angle pos. 4
B1604	Aluminum	Central	0.3	135°	135°	N/A	45°
Q1604	Steel	Central	0.55	135°	135°	N/A	45°
B1605	Aluminum	Right	0.3	135°	135°	N/A	45°
Q1605	Steel	Right	0.57	135°	135°	N/A	45°
B1606	Aluminum	Left	0.3	135°	135°	N/A	45°
Q1606	Steel	Left	0.57	135°	135°	N/A	45°

Screws: M6x20 **Tightening torque:** 10 N m / 7.37 lb ft

Clamping arms / 16 mm shaft

REV. 00 - 12/05/2017

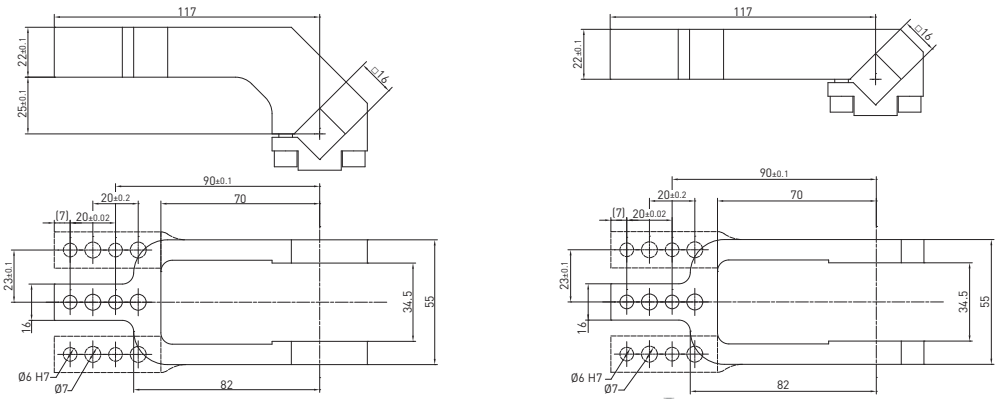

16 mm shaft – 25 mm offset

Part no.	Material	Version	Weight (kg)	Max op. angle pos. 1	Max op. angle pos. 2	Max op. angle pos. 3	Max op. angle pos. 4
B1621	Aluminum	Central	0.25	135°	135°	N/A	45°
B1622	Aluminum	Right	0.25	135°	135°	N/A	45°
B1623	Aluminum	Left	0.25	135°	135°	N/A	45°

Screws: M6x20 **Tightening torque:** 10 N m / 7.37 lb ft

16 mm shaft – 0 mm offset

Part no.	Material	Version	Weight (kg)	Max op. angle pos. 1	Max op. angle pos. 2	Max op. angle pos. 3	Max op. angle pos. 4
B1618	Aluminum	Central	0.25	135°	105°	135°	90°
B1619	Aluminum	Right	0.25	135°	105°	135°	90°
B1620	Aluminum	Left	0.25	135°	105°	135°	90°

Screws: M6x20 **Tightening torque:** 10 N m / 7.37 lb ft

Technical information are provided for informative purpose only and can be subject to change without prior notice

Clamping arms / 16 mm shaft - Left & right clamping surfaces

REV. 00 - 07/11/2019

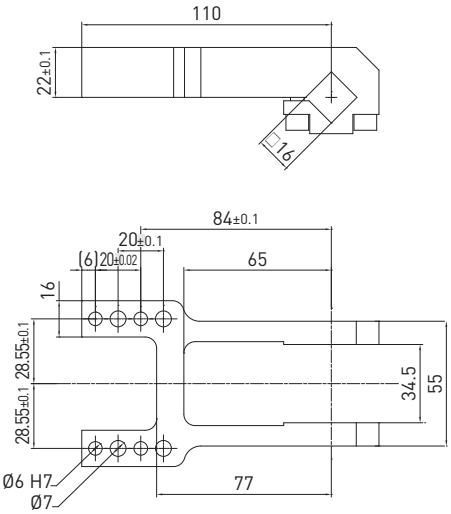

16 mm shaft – 0 mm offset

Part no.	Material	Version	Weight (kg)	Max op. angle pos. 1	Max op. angle pos. 2	Max op. angle pos. 3	Max op. angle pos. 4
B1613	**Aluminum**	**H**	**0.27**	**125°**	**45°**	**135°**	**35° MAX**

Screws: M6x20 **Tightening torque:** 10 N m / 7.37 lb ft

C1P45EG / **Power clamp** - 40 mm bore cylinder and mounting pattern interchangeable to 50 and 63 mm bore clamps

WEIGHT 1.45 kg

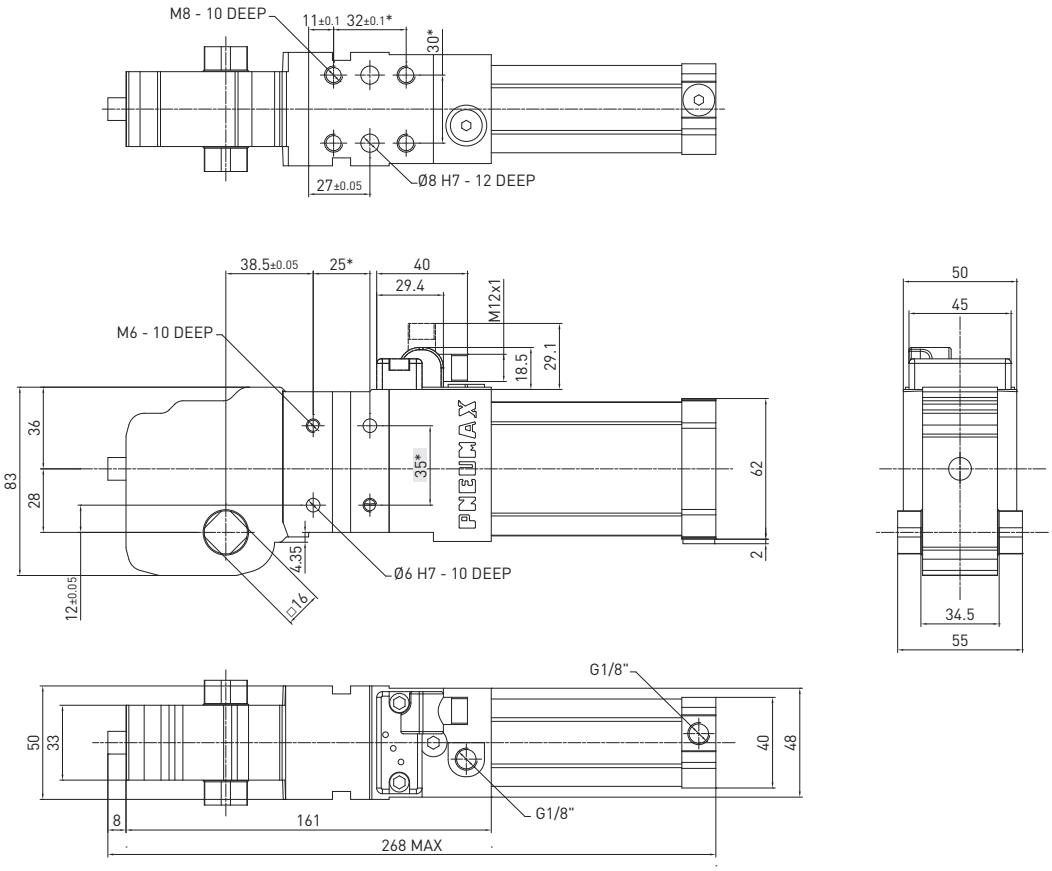

* DIMENSIONAL TOLERANCE FOR DOWEL HOLES: ±0.02

DIMENSIONAL TOLERANCE FOR THREADED HOLES: ±0.1

REV. 00 - 23/04/2019

Clamping arms / 16 mm shaft

REV. 00 - 23/04/2019

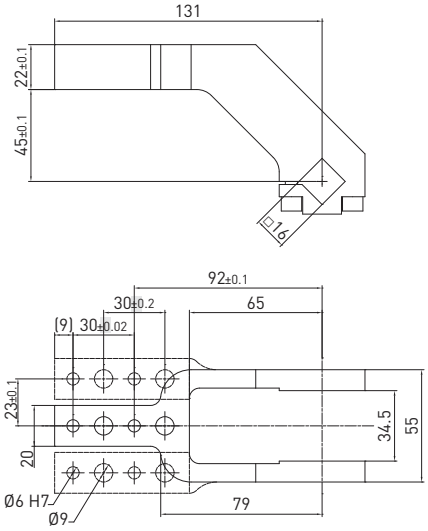

16 mm shaft – 45 mm offset

Part no.	Material	Version	Weight (kg)	Max op. angle pos. 1	Max op. angle pos. 2	Max op. angle pos. 3	Max op. angle pos. 4
B1654	Aluminum	Central	0.3	135°	135°	N/A	45°
B1655	Aluminum	Right	0.3	135°	135°	N/A	45°
B1656	Aluminum	Left	0.3	135°	135°	N/A	45°

Screws: M6x20 **Tightening torque:** 10 N m / 7.37 lb ft

C1P50E / Power clamp - International mount - 50 mm bore

WEIGHT 2.7 kg

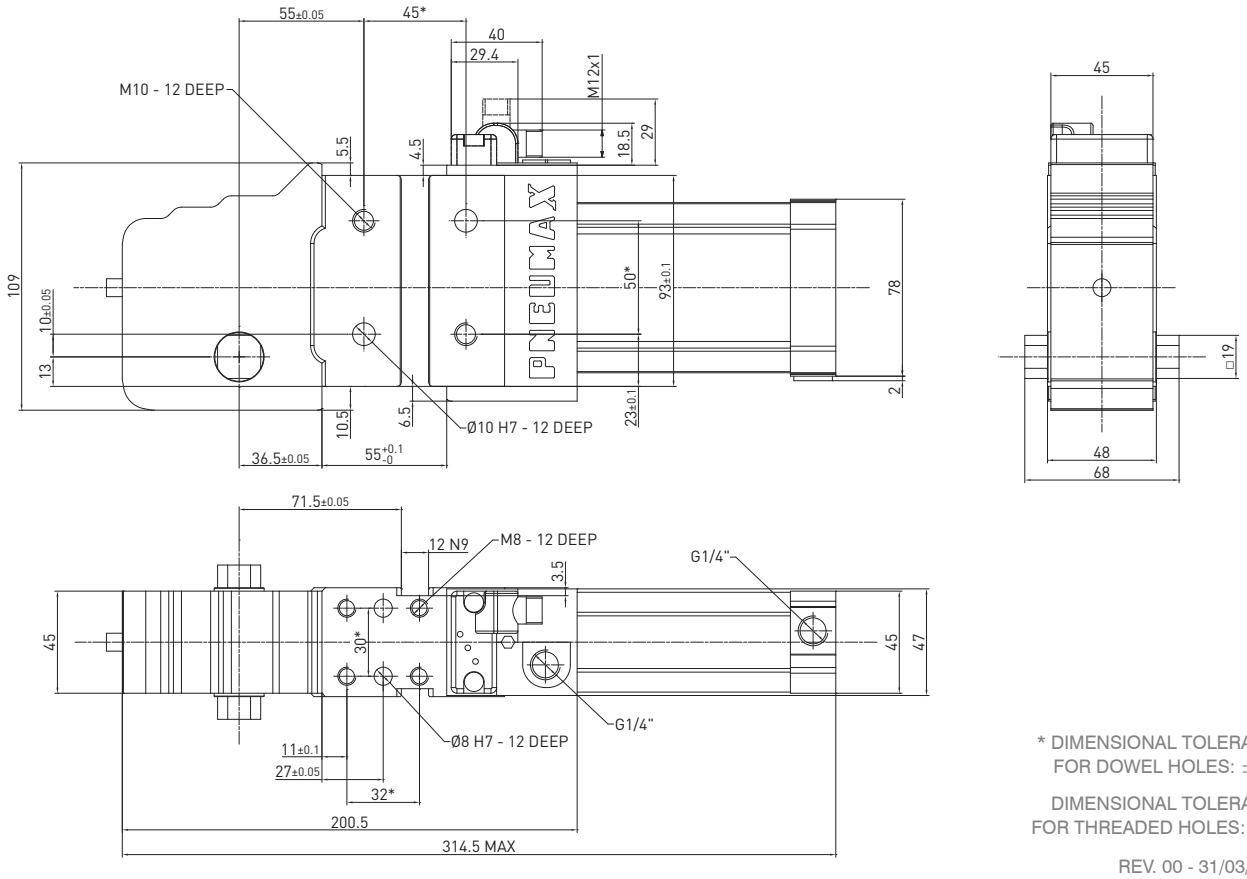

* DIMENSIONAL TOLERANCE FOR DOWEL HOLES: ±0.02

DIMENSIONAL TOLERANCE FOR THREADED HOLES: ±0.1

REV. 00 - 31/03/2015

Technical information are provided for informative purpose only and can be subject to change without prior notice

C1D_50E / **Power clamp** - International mount - 50 mm bore with manual operation

WEIGHT 3.1 kg
D2 handle included

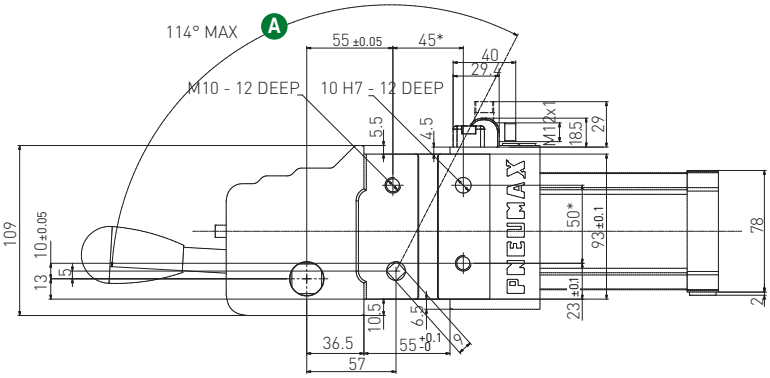

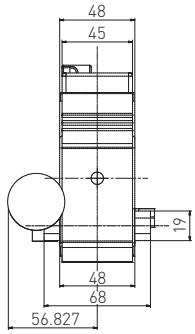

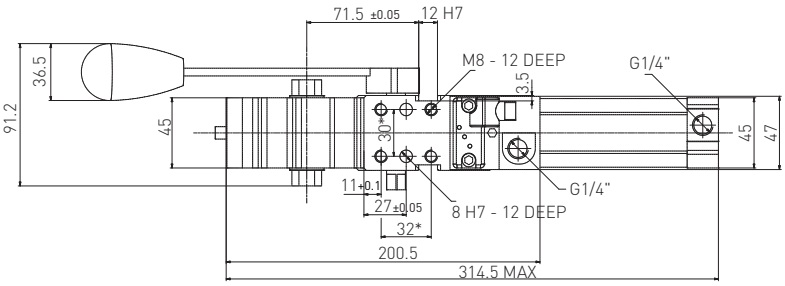

D1 version

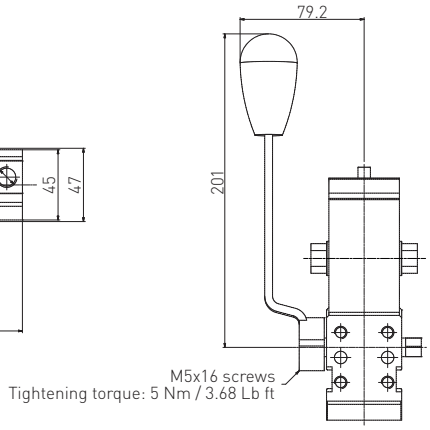

D2 version

Handle swivel angle

Arm opening angle	A Handle swivel angle
0°	3.25°
15°	27°
30°	43°
45°	59.3°
60°	75.4°
75°	89.75°
90°	101°
105°	109°
120°	114.25°
135°	117.2°

Max Hand Force: 200 N

* DIMENSIONAL TOLERANCE
FOR DOWEL HOLES: ±0.02

DIMENSIONAL TOLERANCE
FOR THREADED HOLES: ±0.1

REV. 00 - 29/08/2017

CLAMPING

C1M_50E / Manual power clamp - International mount

WEIGHT 2.9 kg
D2 handle included

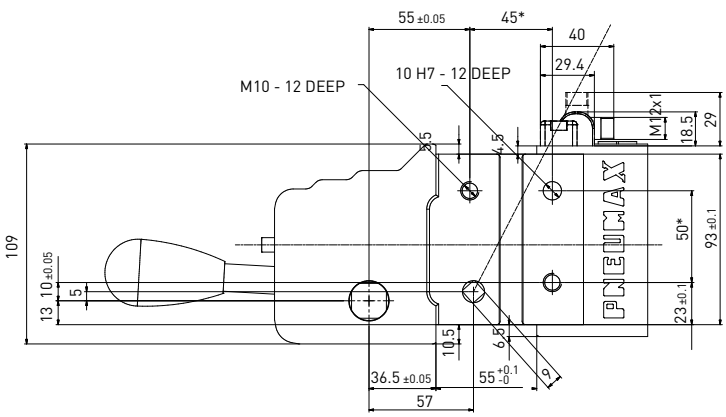

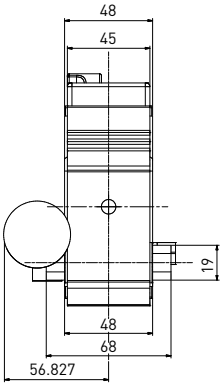

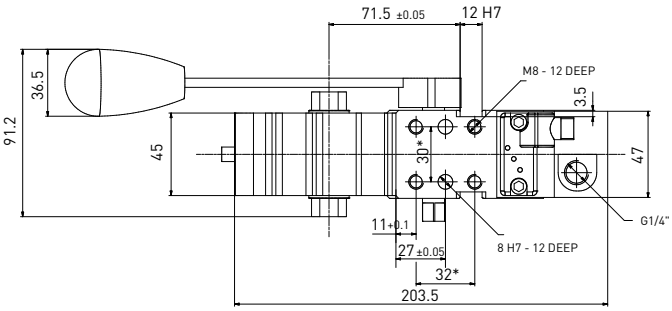

D1 version

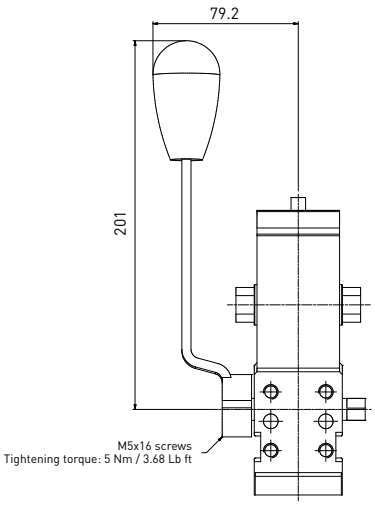

D2 version

Handle swivel angle

Arm opening angle	A Handle swivel angle
0°	3.25°
15°	27°
30°	43°
45°	59.3°
60°	75.4°
75°	89.75°
90°	101°
105°	109°
120°	114.25°
135°	117.2°

Max Hand Force: 200 N

* DIMENSIONAL TOLERANCE FOR DOWEL HOLES: ±0.02

DIMENSIONAL TOLERANCE FOR THREADED HOLES: ±0.1

REV. 00 - 29/08/2017

Technical information are provided for informative purpose only and can be subject to change without prior notice

Clamping arms / 19 mm shaft

REV. 01 - 08/02/2019

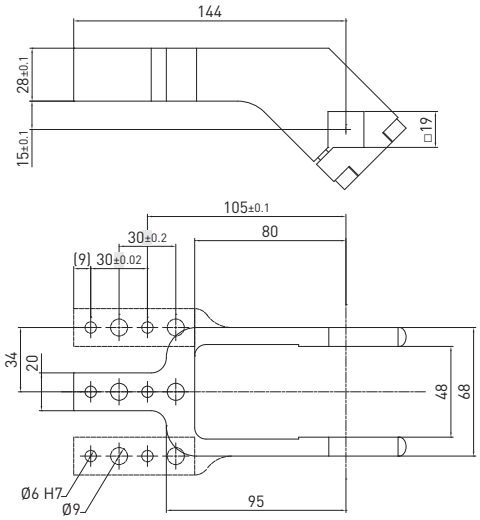

19 mm shaft – 15 mm offset

Part no.	Material	Version	Weight (kg)	Max op. angle pos. 1	Max op. angle pos. 2	Max op. angle pos. 3	Max op. angle pos. 4
B1901	Aluminum	Central	0.41	135°	115°	135°	80°
Q1901	Steel	Central	0.71	135°	115°	135°	80°
B1902	Aluminum	Right	0.43	135°	115°	135°	80°
Q1902	Steel	Right	0.79	135°	115°	135°	80°
B1903	Aluminum	Left	0.43	135°	115°	135°	80°
Q1903	Steel	Left	0.79	135°	115°	135°	80°
B1907	Aluminum	Central	0.41	135°	115°	135°	80°
B1908	Aluminum	Right	0.43	135°	115°	135°	80°
B1909	Aluminum	Left	0.43	135°	115°	135°	80°

Screws: M6x25 **Tightening torque:** 10 N m / 7.37 lb ft

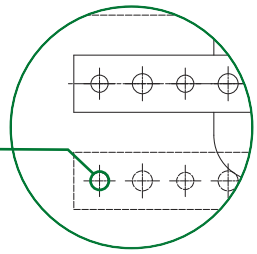

Ø 8 H7
Mount pattern for
B1907 - B1908 - B1909

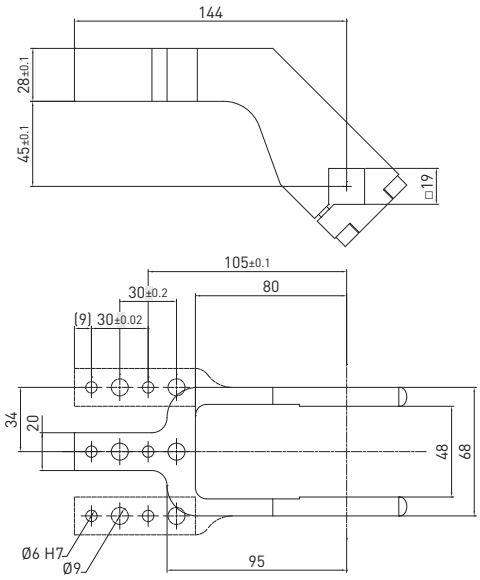

19 mm shaft – 45 mm offset

Part no.	Material	Version	Weight (kg)	Max op. angle pos. 1	Max op. angle pos. 2	Max op. angle pos. 3	Max op. angle pos. 4
B1904	Aluminum	Central	0.45	135°	135°	135°	80°
Q1904	Steel	Central	0.77	135°	135°	135°	80°
B1905	Aluminum	Right	0.46	135°	135°	135°	80°
Q1905	Steel	Right	0.81	135°	135°	135°	80°
B1906	Aluminum	Left	0.46	135°	135°	135°	80°
Q1906	Steel	Left	0.81	135°	135°	135°	80°

Screws: M6x25 **Tightening torque:** 10 N m / 7.37 lb ft

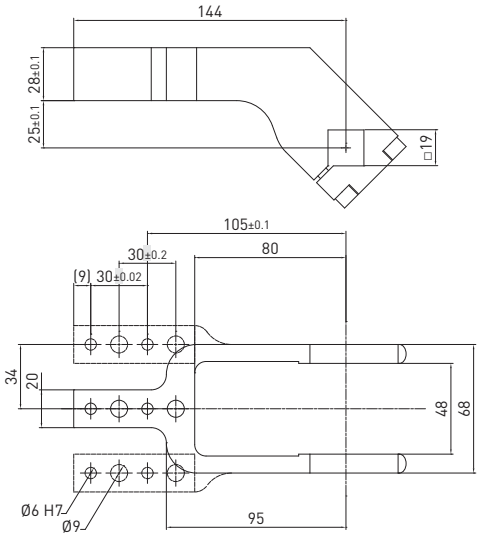

19 mm shaft – 25 mm offset

Part no.	Material	Version	Weight (kg)	Max op. angle pos. 1	Max op. angle pos. 2	Max op. angle pos. 3	Max op. angle pos. 4
B1921	Aluminum	Central	0.43	135°	115°	135°	80°
B1922	Aluminum	Right	0.44	135°	115°	135°	80°
B1923	Aluminum	Left	0.44	135°	115°	135°	80°

Screws: M6x25 **Tightening torque:** 10 N m / 7.37 lb ft

CLAMPING

C1P63E / **Power clamp** - International mount - 63 mm bore

WEIGHT 3.5 kg

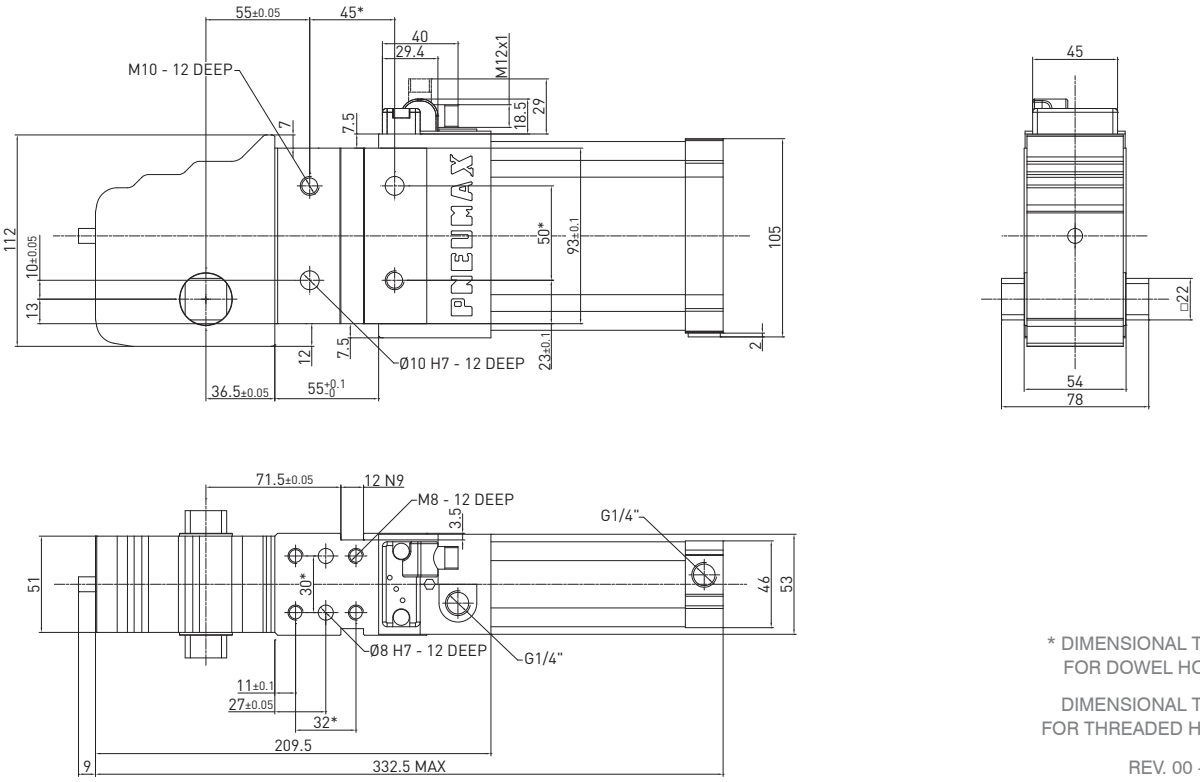

* DIMENSIONAL TOLERANCE FOR DOWEL HOLES: ±0.02

DIMENSIONAL TOLERANCE FOR THREADED HOLES: ±0.1

REV. 00 - 31/03/2015

C1D_63E / **Power clamp** - International mount - 63 mm bore with manual operation

WEIGHT 3.93 kg

D2 handle included

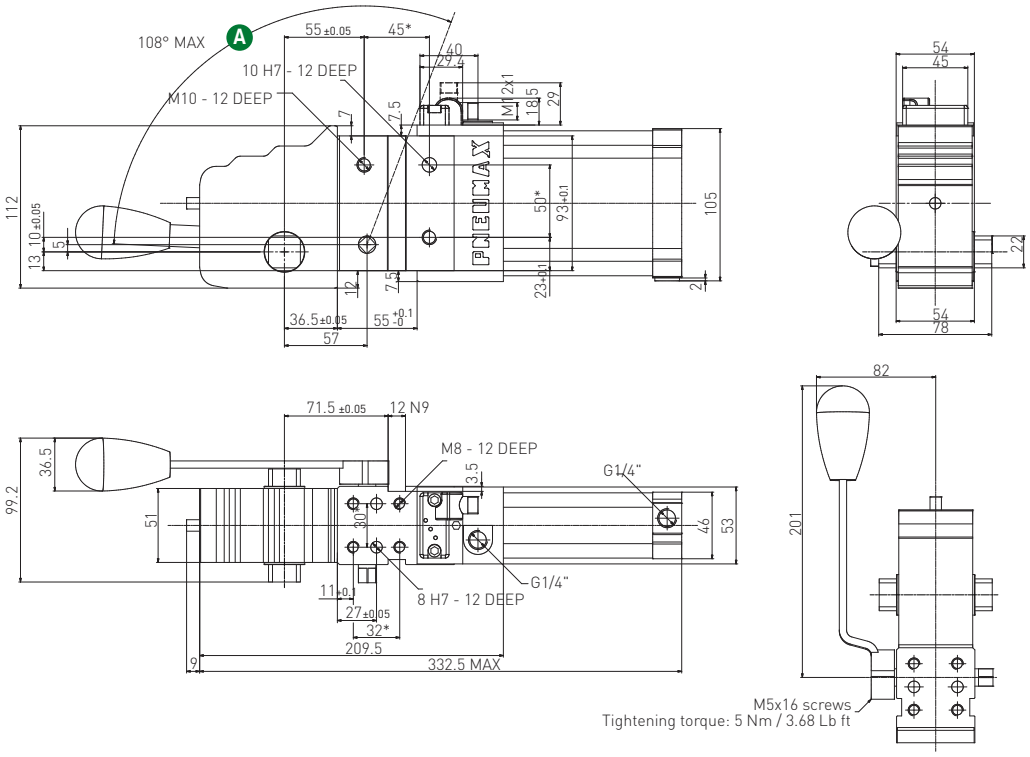

D1 version **D2 version**

Handle swivel angle

Arm opening angle	A Handle swivel angle
0°	2.65°
15°	26.35°
30°	41.38°
45°	56°
60°	70.38°
75°	83.43°
90°	94°
105°	102°
120°	107°
135°	110.7°

Max Hand Force: 200 N

* DIMENSIONAL TOLERANCE FOR DOWEL HOLES: ±0.02

DIMENSIONAL TOLERANCE FOR THREADED HOLES: ±0.1

REV. 00 - 17/06/2015

Technical information are provided for informative purpose only and can be subject to change without prior notice

C1M_63E / Manual power clamp - International mount

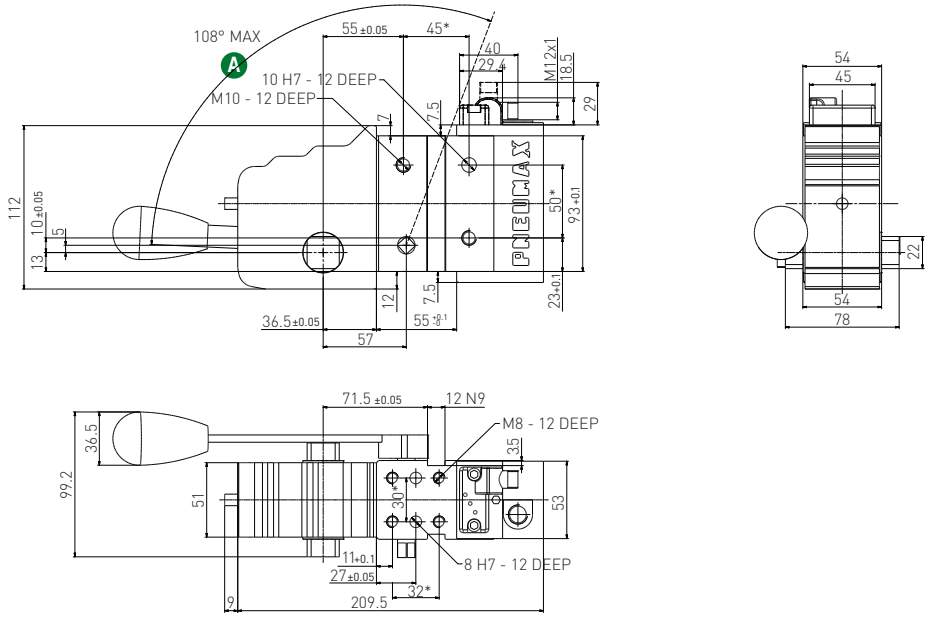

WEIGHT 3.3 kg
D2 handle included

Handle swivel angle

Arm opening angle	A Handle swivel angle
0°	2.65°
15°	26.35°
30°	41.38°
45°	56°
60°	70.38°
75°	83.43°
90°	94°
105°	102°
120°	107°
135°	110.7°

Max Hand Force: 200 N

* DIMENSIONAL TOLERANCE FOR DOWEL HOLES: ±0.02

DIMENSIONAL TOLERANCE FOR THREADED HOLES: ±0.1

REV. 00 - 19/01/2022

Clamping arms / 22 mm shaft

REV. 01 - 08/02/2019

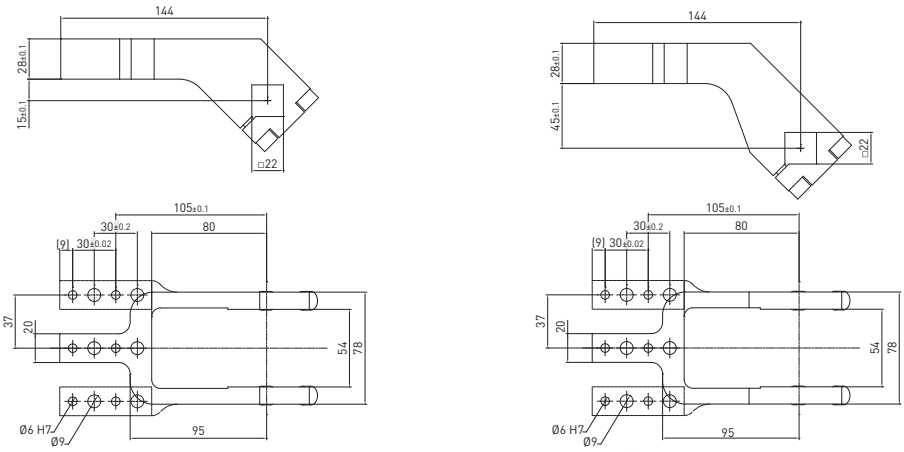

22 mm shaft – 15 mm offset

Part no.	Material	Version	Weight (kg)	Max op. angle pos. 1	Max op. angle pos. 2	Max op. angle pos. 3	Max op. angle pos. 4
B2201	Aluminum	Central	0.52	135°	115°	135°	80°
Q2201	Steel	Central	0.9	135°	115°	135°	80°
B2202	Aluminum	Right	0.54	135°	115°	135°	80°
Q2202	Steel	Right	0.93	135°	115°	135°	80°
B2203	Aluminum	Left	0.54	135°	115°	135°	80°
Q2203	Steel	Left	0.93	135°	115°	135°	80°

Screws: M8x25 **Tightening torque:** 25 N m / 18.43 lb ft

22 mm shaft – 15 mm offset

Part no.	Material	Version	Weight (kg)	Max op. angle pos. 1	Max op. angle pos. 2	Max op. angle pos. 3	Max op. angle pos. 4
B2215	Aluminum	H	0,63	135°	115°	135°	80°

Screws: M8x25 **Tightening torque:** 25 N m / 18.43 lb ft

22 mm shaft – 45 mm offset

Part no.	Material	Version	Weight (kg)	Max op. angle pos. 1	Max op. angle pos. 2	Max op. angle pos. 3	Max op. angle pos. 4
B2204	Aluminum	Central	0.57	135°	135°	135°	75°
Q2204	Steel	Central	0.98	135°	135°	135°	75°
B2205	Aluminum	Right	0.58	135°	135°	135°	75°
Q2205	Steel	Right	1.02	135°	135°	135°	75°
B2206	Aluminum	Left	0.58	135°	135°	135°	75°
Q2206	Steel	Left	1.02	135°	135°	135°	75°

Screws: M8x25 **Tightening torque:** 25 N m / 18.43 lb ft

Clamping arms / 22 mm shaft

REV. 01 - 08/02/2019

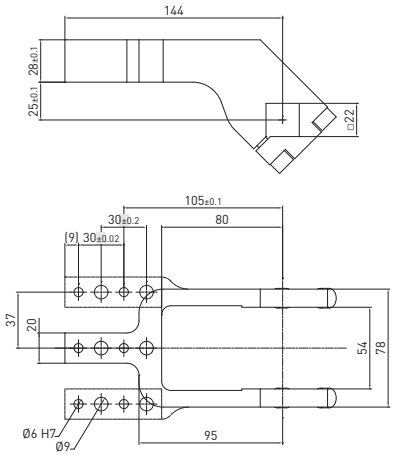

22 mm shaft – 25 mm offset

Part no.	Material	Version	Weight (kg)	Max op. angle pos. 1	Max op. angle pos. 2	Max op. angle pos. 3	Max op. angle pos. 4
B2221	Aluminum	Central	0.55	135°	115°	135°	80°
B2222	Aluminum	Right	0.57	135°	115°	135°	80°
B2223	Aluminum	Left	0.57	135°	115°	135°	80°

Screws: M8x25 **Tightening torque:** 25 N m / 18.43 lb ft

C1P80E / Power clamp - International mount - 80 mm bore

WEIGHT 8.54 kg

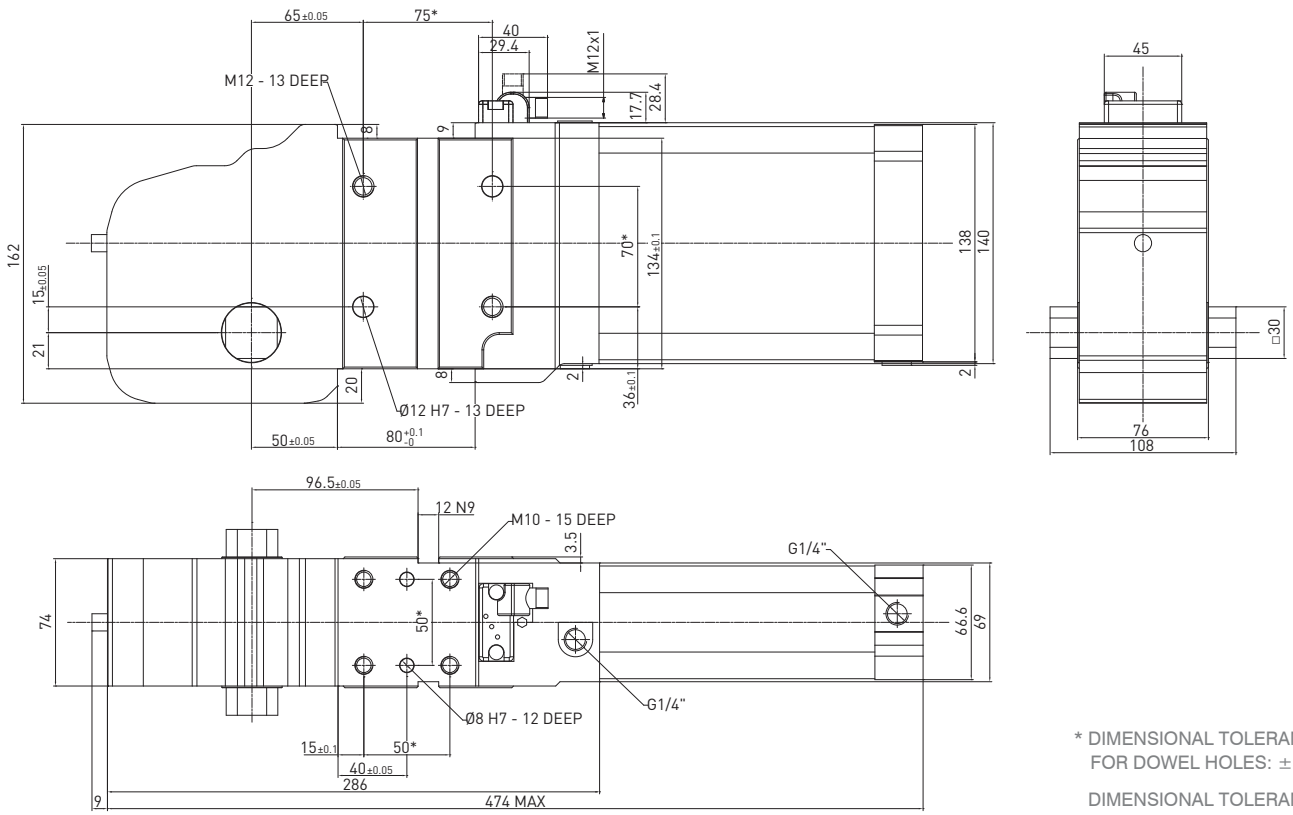

* DIMENSIONAL TOLERANCE FOR DOWEL HOLES: ±0.02

DIMENSIONAL TOLERANCE FOR THREADED HOLES: ±0.1

REV. 00 - 31/03/2015

Technical information are provided for informative purpose only and can be subject to change without prior notice

C1D280E / **Power clamp** - International mount - 80 mm bore with manual operation

WEIGHT 8.8 kg

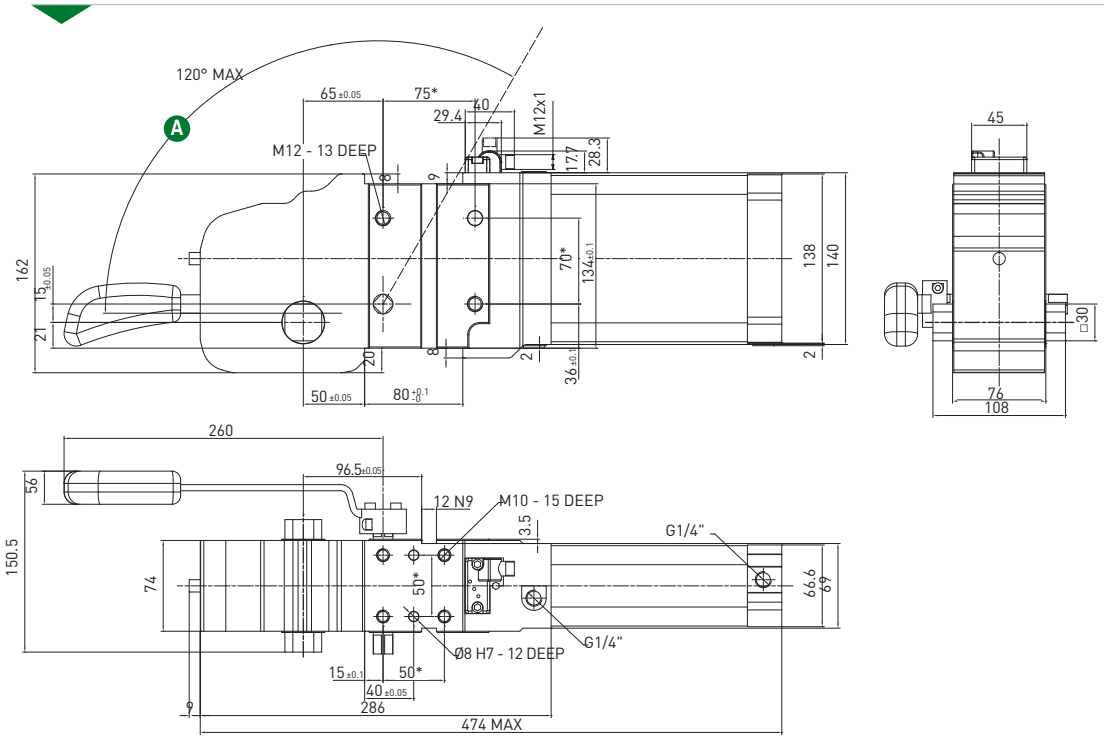

Handle swivel angle

Arm opening angle	A Handle swivel angle
0°	3°
15°	22°
30°	36°
45°	51.3°
60°	68°
75°	84.2°
90°	98°
105°	108°
120°	115°
135°	119°

Max Hand Force: 200 N

* DIMENSIONAL TOLERANCE FOR DOWEL HOLES: ±0.02

DIMENSIONAL TOLERANCE FOR THREADED HOLES: ±0.1

REV. 00 - 03/03/2017

Clamping arms / 30 mm shaft

REV. 01 - 08/02/2019

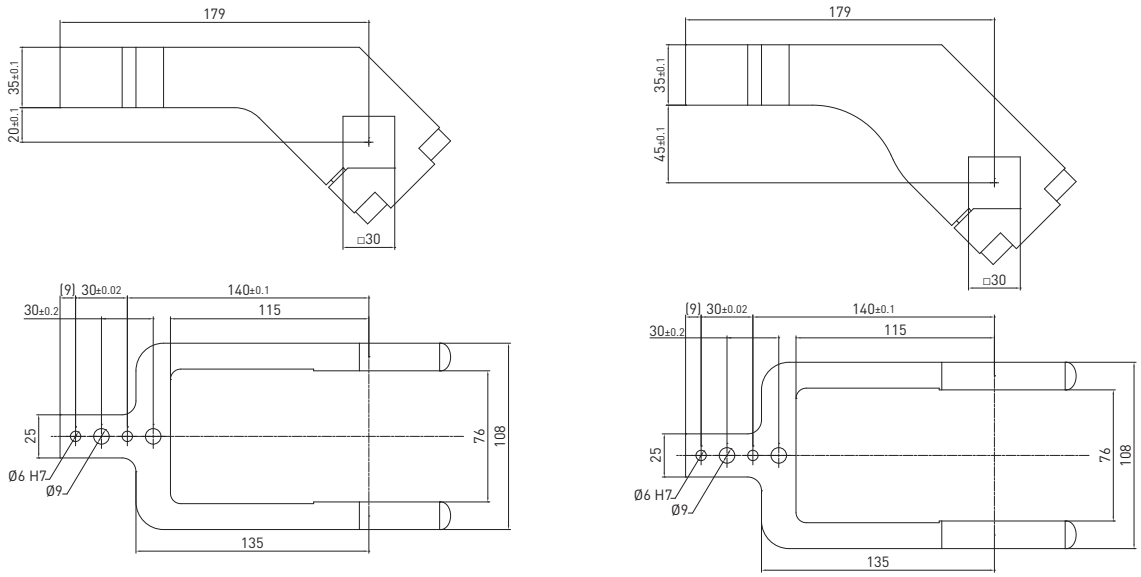

30 mm shaft – 20 mm offset

Part no.	Material	Version	Weight (kg)	Max op. angle pos. 1	Max op. angle pos. 2	Max op. angle pos. 3	Max op. angle pos. 4
B3001	Aluminum	Central	1.1	135°	110°	135°	75°
B3002	Aluminum	Right	1.15	135°	110°	135°	75°
B3003	Aluminum	Left	1.15	135°	110°	135°	75°

Screws: M10x40 **Tightening torque:** 35 N m / 25.81 lb ft

30 mm shaft – 45 mm offset

Part no.	Material	Version	Weight (kg)	Max op. angle pos. 1	Max op. angle pos. 2	Max op. angle pos. 3	Max op. angle pos. 4
B3004	Aluminum	Central	1.18	135°	110°	135°	75°
B3005	Aluminum	Right	1.2	135°	110°	135°	75°
B3006	Aluminum	Left	1.2	135°	110°	135°	75°

Screws: M10x40 **Tightening torque:** 35 N m / 25.81 lb ft

Clamping arms / 30 mm shaft

REV. 00 - 28/11/2019

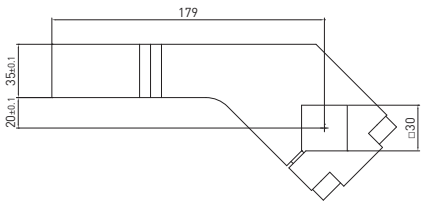

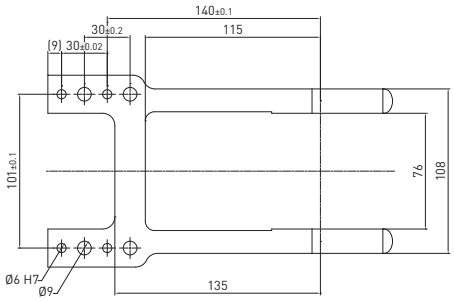

30 mm shaft – 20 mm offset

Part no.	Material	Version	Weight (kg)	Max op. angle pos. 1	Max op. angle pos. 2	Max op. angle pos. 3	Max op. angle pos. 4
B3016	**Aluminum**	**H**	**1.4**	**135°**	**110°**	**135°**	**75°**

Screws: M10x40 **Tightening torque:** 35 N m / 25.81 lb ft

Technical information are provided for informative purpose only and can be subject to change without prior notice

C2-Series

Pneumatic power clamps conforming to the NAAMS Standard

Pneumax clamps' series have all been developed with a modern and compact design which goes towards **enhancing the operational performances**, such as the cycle time, combined with a very limited total weight without compromising their **strength** and **resistance**.

CLAMPING

Technical features

Manual release button to open the linkage when air pressure is removed during setup. **Pneumatic ports on both sides** of the cylinder.

Operating features	
Operating pressure	from 2 to 8 bar / from 30 to 115 psi
Lubrication	all the devices are lubricated for life at the factory. Inline air lubrication isn't required

Functional charts

Size 50 mm

- **Air consumption**
  Air consumption for complete cycle (opening and closing)
  REV. 00 - 16/06/2015

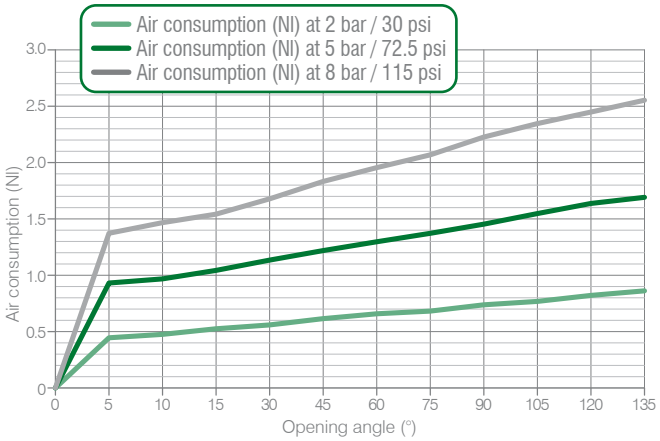

- **Tooling weight chart**
  5 bar operating pressure – 135° opening angle
  REV. 00 - 16/06/2015

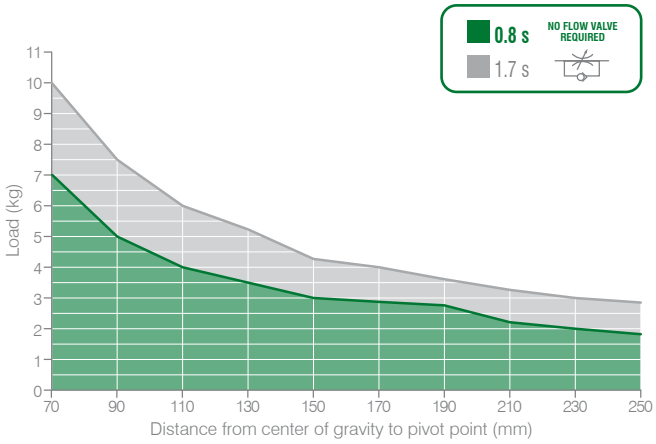

- **Clamping moment (at 5 bar / 72.5 psi)**
  185 N m / 136,44 lb·ft

- **Holding moment**
  800 N m / 590,04 lb·ft

The above data are meant for correct working conditions of the clamp with the same performance level during its life time.
For applications which exceed the above data, please contact our sales representatives.

CLAMPING

Size 63 mm

- **Air consumption**
  Air consumption for complete cycle (opening and closing)
  REV. 00 - 17/06/2015

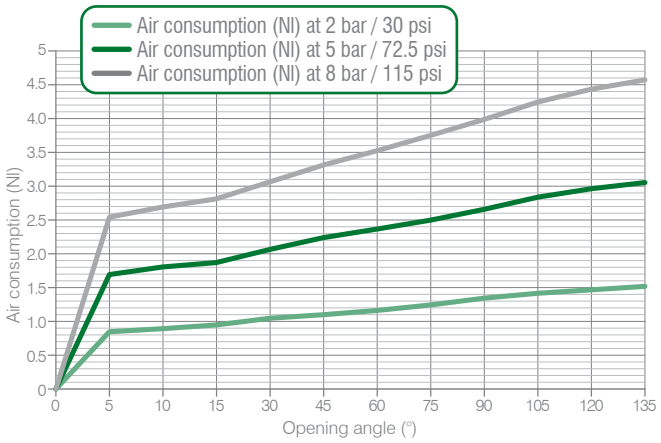

- **Tooling weight chart**
  5 bar operating pressure – 135° opening angle
  REV. 00 - 17/06/2015

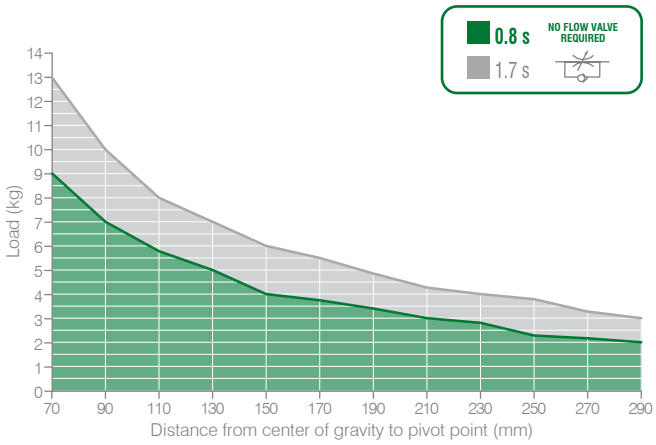

- **Clamping moment (at 5 bar / 72.5 psi)**
  390 N m / 287,64 lb·ft

- **Holding moment**
  1.500 N m / 1.106,34 lb·ft

The above data are meant for correct working conditions of the clamp with the same performance level during its life time.
For applications which exceed the above data, please contact our sales representatives.

Size 80 mm

- **Air consumption**
  Air consumption for complete cycle (opening and closing)
  REV. 00 - 29/05/2015

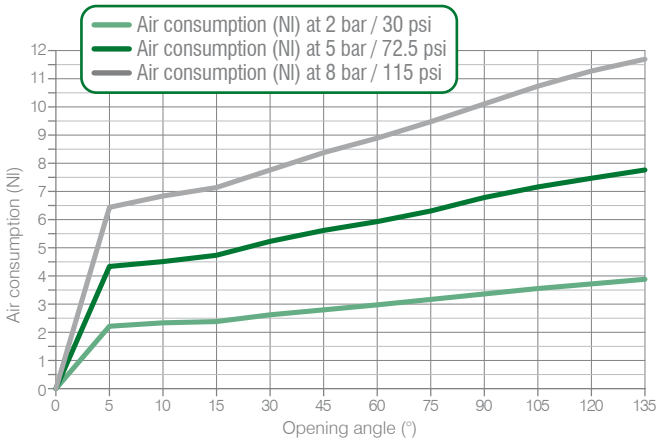

- **Tooling weight chart**
  5 bar operating pressure – 135° opening angle
  REV. 00 - 29/05/2016

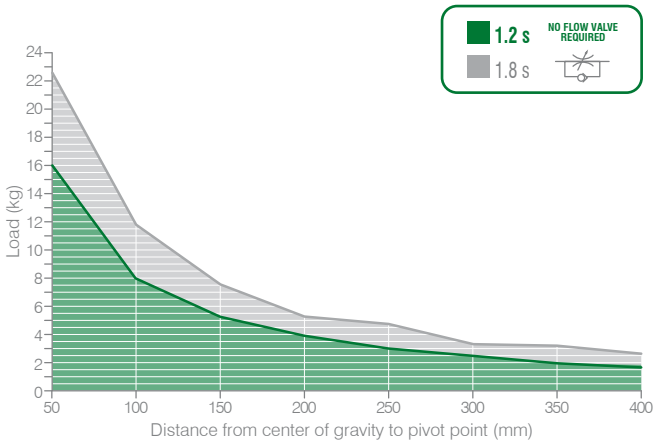

- **Clamping moment (at 5 bar / 72.5 psi)**
  850 N m / 626,92 lb·ft

- **Holding moment**
  2.500 N m / 1.843,90 lb·ft

The above data are meant for correct working conditions of the clamp with the same performance level during its life time.
For applications which exceed the above data, please contact our sales representatives.

Technical information are provided for informative purpose only and can be subject to change without prior notice

C2-Series / Ordering string

C2-Series

C	2	P	50	E	N	L

C	**VERSION**	**C** = clamp
2	**MOUNTING PATTERN**	**2** = NAAMS Standard
P	**OPERATION**	**P** = pneumatic **D** = pneumatic with manual operation **D0** = output shaft for manual operation - no lever and no handle included
50	**SIZE**	**50** = Ø 50 mm **63** = Ø 63 mm **80** = Ø 80 mm
E	**SENSOR**	**E** = electronic sensor with M12 swivel connector - PNP **A** = electronic sensor with M12 swivel connector - NPN **N** = no sensor **B** = electronic sensor with M8 swivel connector - PNP
N	**PORTS**	**G** = G thread – BSPP **N** = NPT
L	**SHAFT OUTPUT**	**_** = dual output **L** = single output - LEFT **R** = single output - RIGHT

NAAMS clamping arms to be ordered separately
Please see the charts in the datasheets
for arm position as well as for max. opening angle

CLAMPING

C2P50E / **Power clamp** - NAAMS Std - 50 mm bore

WEIGHT 2.7 kg

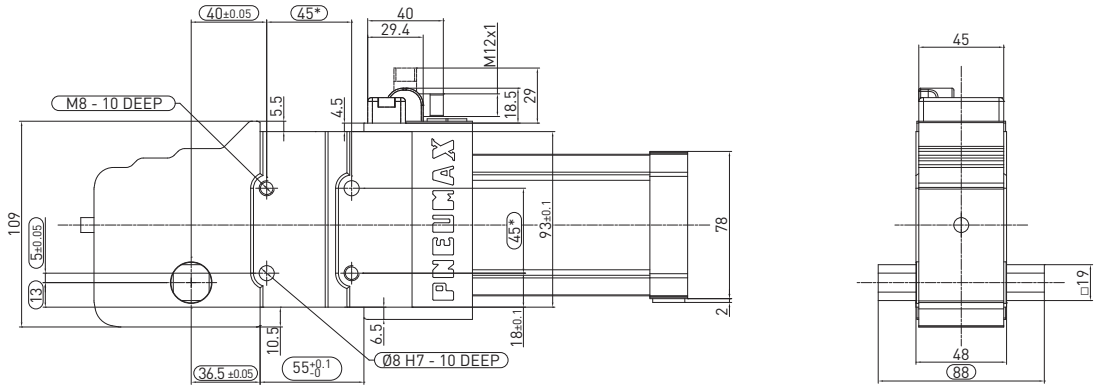

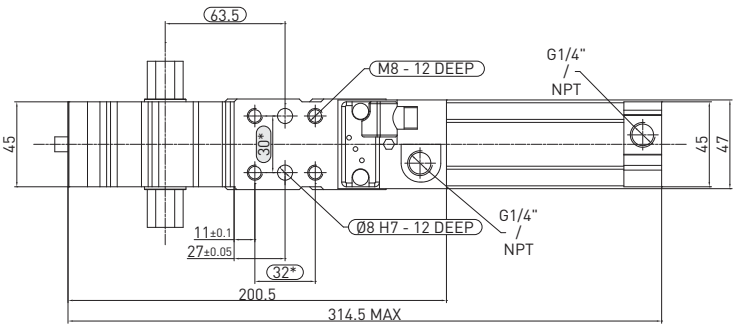

* DIMENSIONAL TOLERANCE
FOR DOWEL HOLES: ±0.02

DIMENSIONAL TOLERANCE
FOR THREADED HOLES: ±0.1

REV. 01 - 15/05/2016

CLAMPING

C2D250E / Power clamp - NAAMS Std - 50 mm bore with manual operation

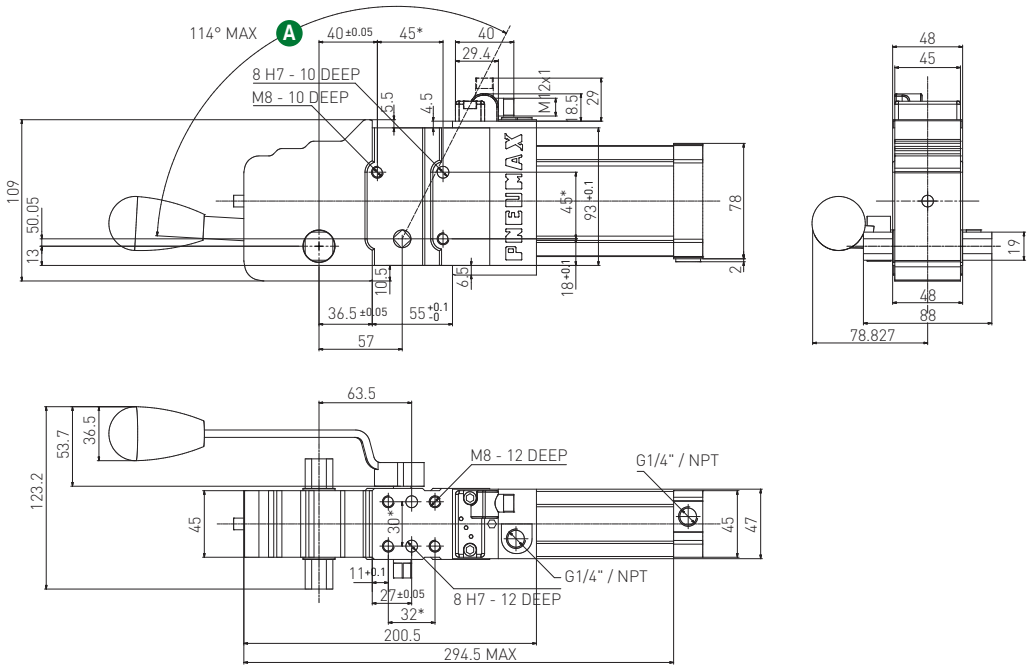

WEIGHT 3.17 kg
D2 handle included

Handle swivel angle

Arm opening angle	A Handle swivel angle
0°	3.25°
15°	27°
30°	43°
45°	59.3°
60°	75.4°
75°	89.75°
90°	101°
105°	109°
120°	114.25°
135°	117.2°

Max Hand Force: 200 N

* DIMENSIONAL TOLERANCE FOR DOWEL HOLES: ±0.02

DIMENSIONAL TOLERANCE FOR THREADED HOLES: ±0.1

REV. 01 - 15/05/2016

Clamping arms / 19 mm shaft - NAAMS Std

REV 03 - 29/03/2019

0 mm OFFSET

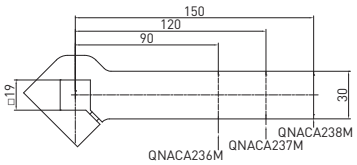

25 mm OFFSET

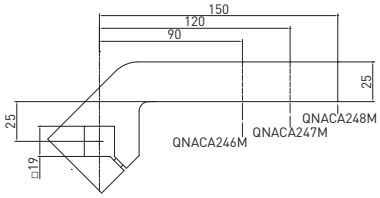

50 mm OFFSET

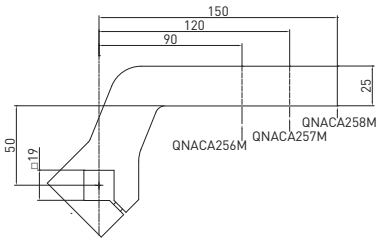

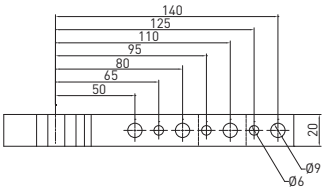

19 mm shaft – 0 mm offset

Part no.	Material	Length (mm)	Weight (kg)	Max op. angle pos. 1	Max op. angle pos. 2	Max op. angle pos. 3	Max op. angle pos. 4
QNACA236M	Steel	90	0.4	135°	135°	135°	135°
QNACA237M	Steel	120	0.49	135°	135°	135°	135°
QNACA238M	Steel	150	0.58	135°	135°	135°	135°

Screws: M6x25 **Tightening torque:** 10 N m / 7.37 lb·ft

19 mm shaft – 25 mm offset

Part no.	Material	Length (mm)	Weight (kg)	Max op. angle pos. 1	Max op. angle pos. 2	Max op. angle pos. 3	Max op. angle pos. 4
QNACA246M	Steel	90	0.44	135°	135°	135°	135°
QNACA247M	Steel	120	0.52	135°	135°	135°	135°
QNACA248M	Steel	150	0.6	135°	135°	135°	135°

Screws: M6x25 **Tightening torque:** 10 N m / 7.37 lb·ft

19 mm shaft – 50 mm offset

Part no.	Material	Length (mm)	Weight (kg)	Max op. angle pos. 1	Max op. angle pos. 2	Max op. angle pos. 3	Max op. angle pos. 4
QNACA256M	Steel	90	0.52	135°	135°	135°	135°
QNACA257M	Steel	120	0.6	135°	135°	135°	135°
QNACA258M	Steel	150	0.68	135°	135°	135°	135°

Screws: M6x25 **Tightening torque:** 10 N m / 7.37 lb·ft

Technical information are provided for informative purpose only and can be subject to change without prior notice

C2P63E / **Power clamp** - NAAMS Std - 63 mm bore

WEIGHT 3.5 kg

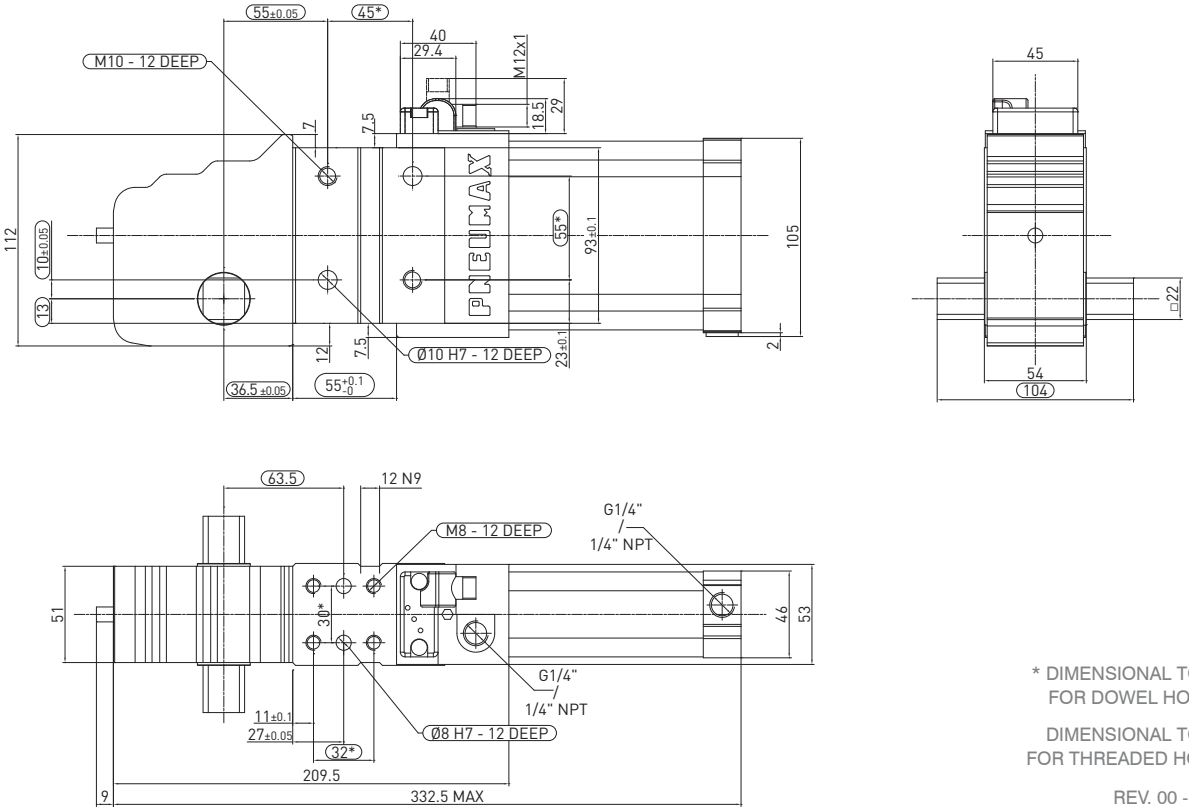

* DIMENSIONAL TOLERANCE FOR DOWEL HOLES: ±0.02

DIMENSIONAL TOLERANCE FOR THREADED HOLES: ±0.1

REV. 00 - 31/03/2015

C2D263E / **Power clamp** - NAAMS Std - 63 mm bore with manual operation

WEIGHT 4 kg

D2 handle included

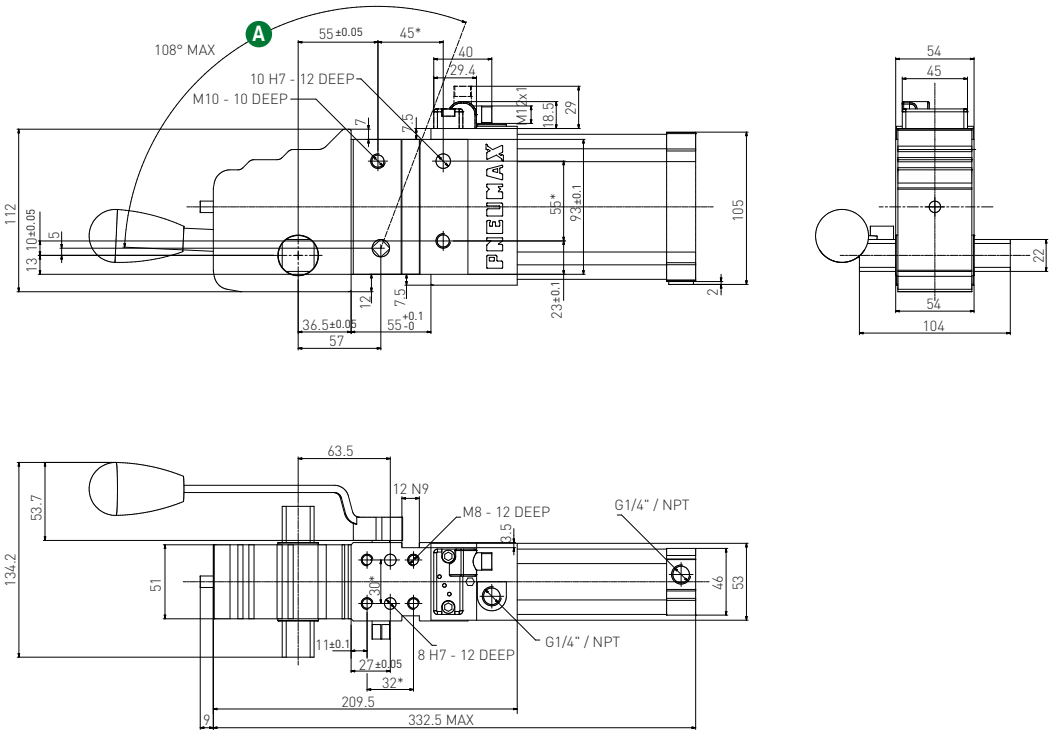

Handle swivel angle

Arm opening angle	A Handle swivel angle
0°	2.65°
15°	26.35°
30°	41.38°
45°	56°
60°	70.38°
75°	83.43°
90°	94°
105°	102°
120°	107°
135°	110.7°

Max Hand Force: 200 N

* DIMENSIONAL TOLERANCE FOR DOWEL HOLES: ±0.02

DIMENSIONAL TOLERANCE FOR THREADED HOLES: ±0.1

REV. 00 - 17/06/2015

CLAMPING

Clamping arms / 22 mm shaft - NAAMS Std

REV 02 - 29/03/2019

0 mm OFFSET

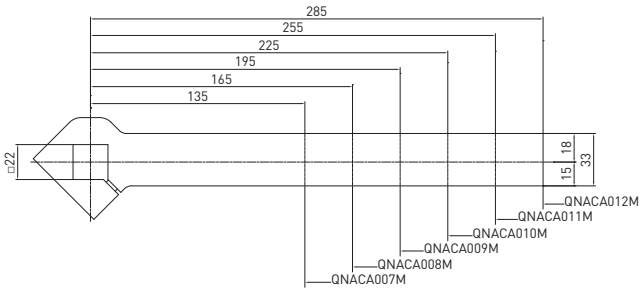

25 mm OFFSET

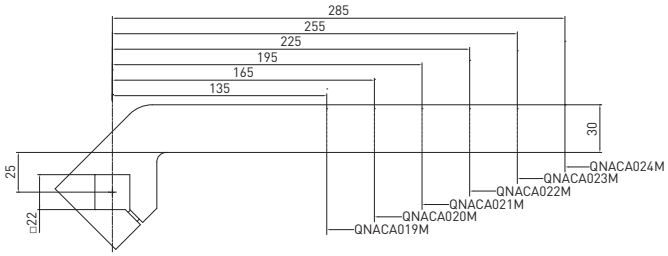

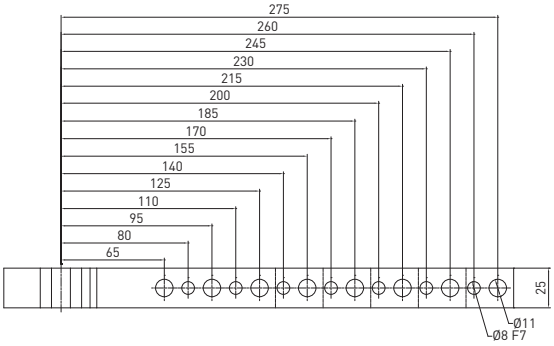

22 mm shaft – 0 mm offset

Part no.	Material	Length (mm)	Weight (kg)	Max op. angle pos. 1	Max op. angle pos. 2	Max op. angle pos. 3	Max op. angle pos. 4
QNACA007M	**Steel**	**135**	**0.72**	**135°**	**135°**	**135°**	**135°**
QNACA008M	**Steel**	**165**	**0.83**	**135°**	**135°**	**135°**	**135°**
QNACA009M	**Steel**	**195**	**0.94**	**135°**	**135°**	**135°**	**135°**
QNACA010M	**Steel**	**225**	**1.05**	**135°**	**135°**	**135°**	**135°**
QNACA011M	**Steel**	**255**	**1.16**	**135°**	**135°**	**135°**	**135°**
QNACA012M	**Steel**	**285**	**1.28**	**135°**	**135°**	**135°**	**135°**

Screws: M8X25 **Tightening torque:** 25 N m / 18.43 lb ft

22 mm shaft – 25 mm offset

Part no.	Material	Length (mm)	Weight (kg)	Max op. angle pos. 1	Max op. angle pos. 2	Max op. angle pos. 3	Max op. angle pos. 4
QNACA019M	**Steel**	**135**	**0.84**	**135°**	**135°**	**135°**	**135°**
QNACA020M	**Steel**	**165**	**0.95**	**135°**	**135°**	**135°**	**135°**
QNACA021M	**Steel**	**195**	**1.05**	**135°**	**135°**	**135°**	**135°**
QNACA022M	**Steel**	**225**	**1.16**	**135°**	**135°**	**135°**	**135°**
QNACA023M	**Steel**	**255**	**1.26**	**135°**	**135°**	**135°**	**135°**
QNACA024M	**Steel**	**285**	**1.37**	**135°**	**135°**	**135°**	**135°**

Screws: M8X25 **Tightening torque:** 25 N m / 18.43 lb ft

Technical information are provided for informative purpose only and can be subject to change without prior notice

Clamping arms / 22 mm shaft - NAAMS Std

REV 01 - 29/03/2019

70 mm OFFSET

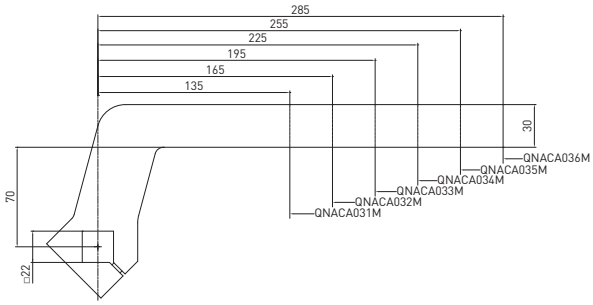

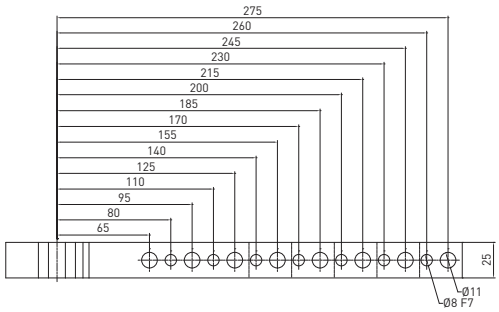

120 mm OFFSET

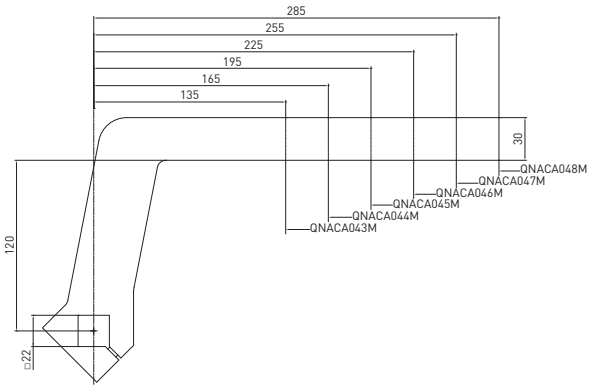

22 mm shaft – 70 mm offset

Part no.	Material	Length (mm)	Weight (kg)	Max op. angle pos. 1	Max op. angle pos. 2	Max op. angle pos. 3	Max op. angle pos. 4
QNACA031M	Steel	135	1.05	135°	135°	135°	135°
QNACA032M	Steel	165	1.16	135°	135°	135°	135°
QNACA033M	Steel	195	1.27	135°	135°	135°	135°
QNACA034M	Steel	225	1.38	135°	135°	135°	135°
QNACA035M	Steel	255	1.49	135°	135°	135°	135°
QNACA036M	Steel	285	1.6	135°	135°	135°	135°

Screws: M8X25 **Tightening torque:** 25 N m / 18.43 lb ft **ft**

22 mm shaft – 120 mm offset

Part no.	Material	Length (mm)	Weight (kg)	Max op. angle pos. 1	Max op. angle pos. 2	Max op. angle pos. 3	Max op. angle pos. 4
QNACA043M	Steel	135	1.27	135°	135°	135°	135°
QNACA044M	Steel	165	1.37	135°	135°	135°	135°
QNACA045M	Steel	195	1.48	135°	135°	135°	135°
QNACA046M	Steel	225	1.58	135°	135°	135°	135°
QNACA047M	Steel	255	1.69	135°	135°	135°	135°
QNACA048M	Steel	285	1.8	135°	135°	135°	135°

Screws: M8X25 **Tightening torque:** 25 N m / 18.43 lb ft

C2P80E / Power clamp - NAAMS Std - 80 mm bore

WEIGHT 8.75 kg

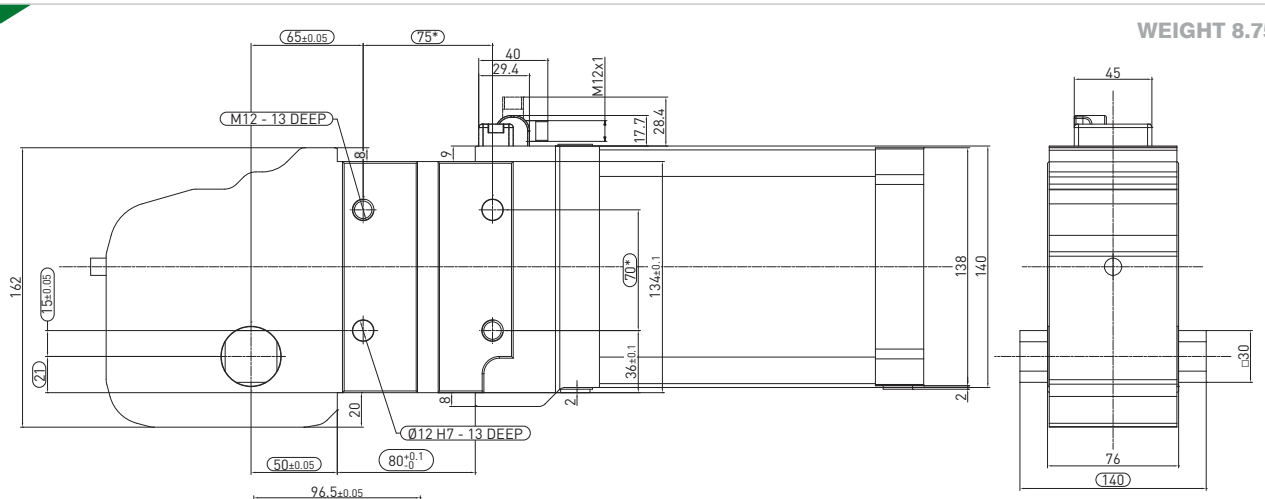

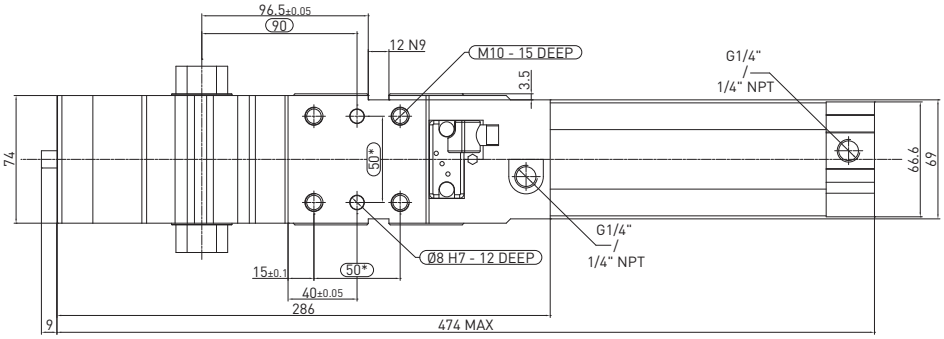

* DIMENSIONAL TOLERANCE FOR DOWEL HOLES: ±0.02

DIMENSIONAL TOLERANCE FOR THREADED HOLES: ±0.1

REV. 00 - 31/07/2015

CLAMPING

Clamping arms / 30 mm shaft - NAAMS Std

REV 01 - 29/03/2019

0 mm OFFSET

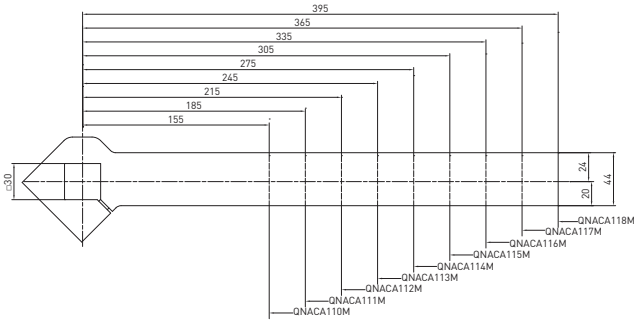

25 mm OFFSET

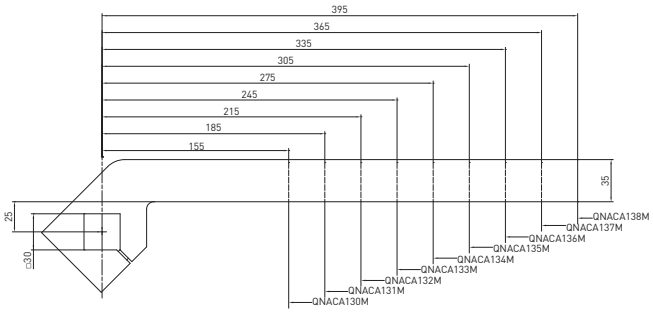

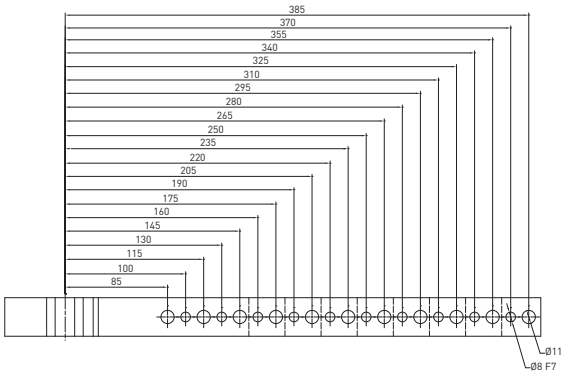

30 mm shaft – 0 mm offset

Part no.	Material	Length (mm)	Weight (kg)	Max op. angle pos. 1	Max op. angle pos. 2	Max op. angle pos. 3	Max op. angle pos. 4
QNACA110M	Steel	155	1.41	135°	135°	135°	135°
QNACA111M	Steel	185	1.58	135°	135°	135°	135°
QNACA112M	Steel	215	1.76	135°	135°	135°	135°
QNACA113M	Steel	245	1.93	135°	135°	135°	135°
QNACA114M	Steel	275	2.1	135°	135°	135°	135°
QNACA115M	Steel	305	2.27	135°	135°	135°	135°
QNACA116M	Steel	335	2.45	135°	135°	135°	135°
QNACA117M	Steel	365	2.62	135°	135°	135°	135°
QNACA118M	Steel	395	2.8	135°	135°	135°	135°

Screws: M10x40 **Tightening torque:** 35 N m / 25.81 lb ft

30 mm shaft – 25 mm offset

Part no.	Material	Length (mm)	Weight (kg)	Max op. angle pos. 1	Max op. angle pos. 2	Max op. angle pos. 3	Max op. angle pos. 4
QNACA130M	Steel	155	1.24	135°	135°	135°	135°
QNACA131M	Steel	185	1.39	135°	135°	135°	135°
QNACA132M	Steel	215	1.54	135°	135°	135°	135°
QNACA133M	Steel	245	1.69	135°	135°	135°	135°
QNACA134M	Steel	275	1.84	135°	135°	135°	135°
QNACA135M	Steel	305	2	135°	135°	135°	135°
QNACA136M	Steel	335	2.14	135°	135°	135°	135°
QNACA137M	Steel	365	2.29	135°	135°	135°	135°
QNACA138M	Steel	395	2.45	135°	135°	135°	135°

Screws: M10x40 **Tightening torque:** 35 N m / 25.81 lb ft

Technical information are provided for informative purpose only and can be subject to change without prior notice

Clamping arms / 30 mm shaft - NAAMS Std

REV 01 - 29/03/2019

70 mm OFFSET

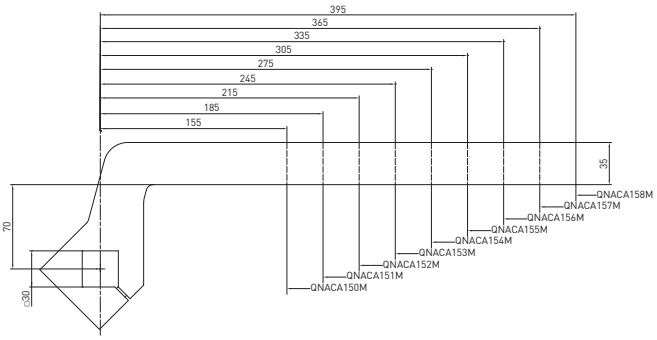

120 mm OFFSET

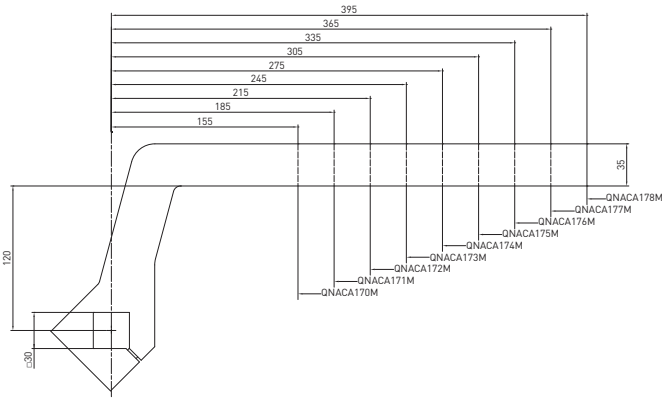

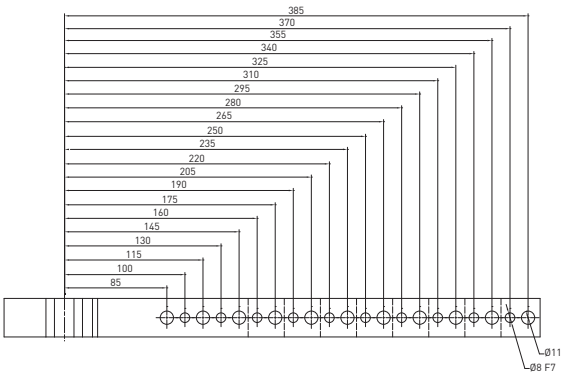

30 mm shaft – 70 mm offset

Part no.	Material	Length (mm)	Weight (kg)	Max op. angle pos. 1	Max op. angle pos. 2	Max op. angle pos. 3	Max op. angle pos. 4
QNACA150M	Steel	155	1.7	135°	135°	135°	135°
QNACA151M	Steel	185	1.85	135°	135°	135°	135°
QNACA152M	Steel	215	2	135°	135°	135°	135°
QNACA153M	Steel	245	2.15	135°	135°	135°	135°
QNACA154M	Steel	275	2.3	135°	135°	135°	135°
QNACA155M	Steel	305	2.45	135°	135°	135°	135°
QNACA156M	Steel	335	2.6	135°	135°	135°	135°
QNACA157M	Steel	365	2.76	135°	135°	135°	135°
QNACA158M	Steel	395	2.92	135°	135°	135°	135°

Screws: M10x40 **Tightening torque:** 35 N m / 25.81 lb ft

30 mm shaft – 120 mm offset

Part no.	Material	Length (mm)	Weight (kg)	Max op. angle pos. 1	Max op. angle pos. 2	Max op. angle pos. 3	Max op. angle pos. 4
QNACA170M	Steel	155	1.97	135°	135°	135°	135°
QNACA171M	Steel	185	2.12	135°	135°	135°	135°
QNACA172M	Steel	215	2.27	135°	135°	135°	135°
QNACA173M	Steel	245	2.42	135°	135°	135°	135°
QNACA174M	Steel	275	2.57	135°	135°	135°	135°
QNACA175M	Steel	305	2.72	135°	135°	135°	135°
QNACA176M	Steel	335	2.87	135°	135°	135°	135°
QNACA177M	Steel	365	3.02	135°	135°	135°	135°
QNACA178M	Steel	395	3.19	135°	135°	135°	135°

Screws: M10x40 **Tightening torque:** 35 N m / 25.81 lb ft

CLAMPING

HE1-Series

High Efficiency power clamps
International mount

INTERNATIONAL MOUNT

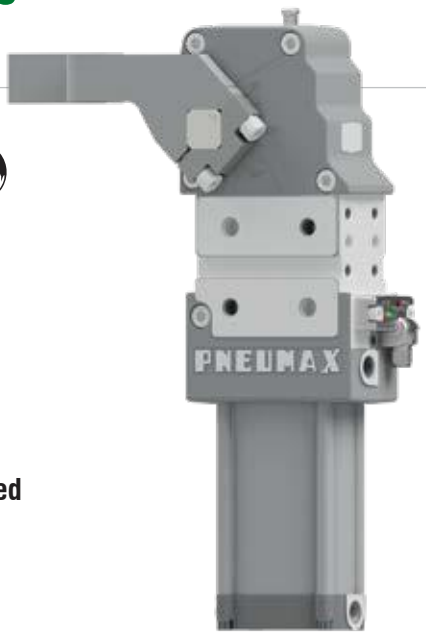

Patented

Air consumption saving up to 41%

The perfect combination between **functionality** and **efficiency**: same clamping moment, same holding moment, same overall and functional dimensions, same load capacity of a standard clamp with International and NAAMS mounts available.

Technical features

Manual release button to open the linkage when air pressure is removed during setup. **Pneumatic ports on both sides** of the cylinder.

Operating features	
Operating pressure	from 2 to 8 bar / from 30 to 115 psi
Lubrication	all the devices are lubricated for life at the factory. Inline air lubrication isn't required

Functional charts

HE1P0E

- **Air consumption**
  Air consumption for complete cycle (opening and closing)
  REV. 00 - 21/01/2016

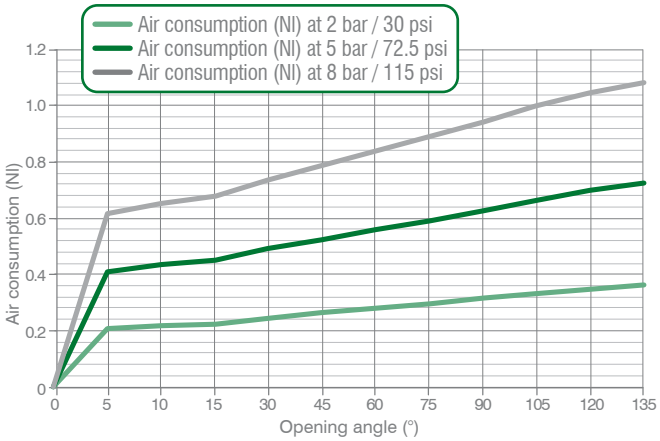

- **Tooling weight chart**
  5 bar operating pressure – 135° opening angle
  REV. 00 - 17/06/2015

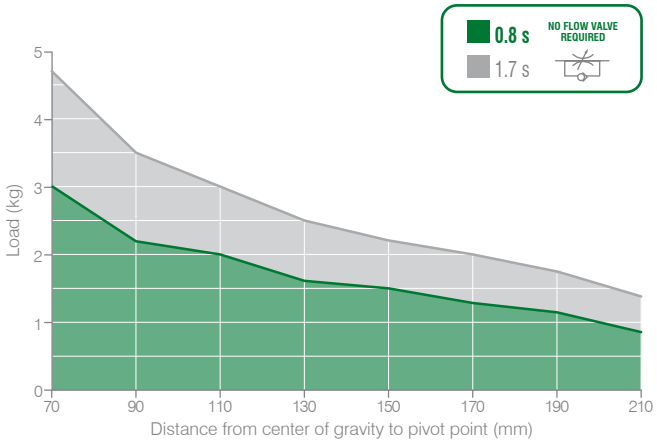

- **Clamping moment (at 5 bar / 72.5 psi)**
  130 N m / 95,88 lb·ft

- **Holding moment**
  380 N m / 280,27 lb·ft

The above data are meant for correct working conditions of the clamp with the same performance level during its life time.
For applications which exceed the above data, please contact our sales representatives.

Technical information are provided for informative purpose only and can be subject to change without prior notice

HE1P1E

- **Air consumption**
  Air consumption for complete cycle (opening and closing)
  REV. 00 - 31/03/2015

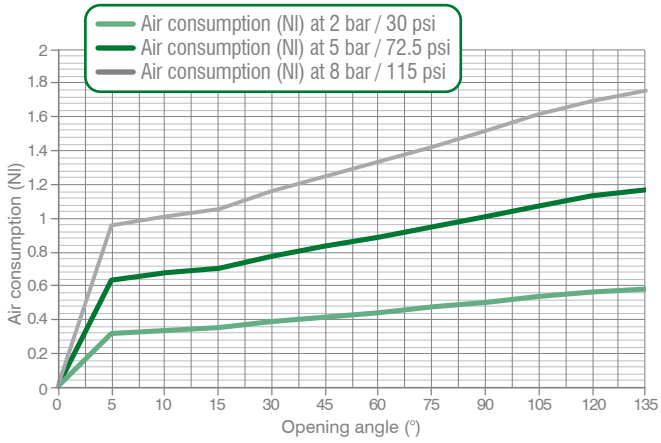

- **Tooling weight chart**
  5 bar operating pressure – 135° opening angle
  REV. 00 - 17/06/2015

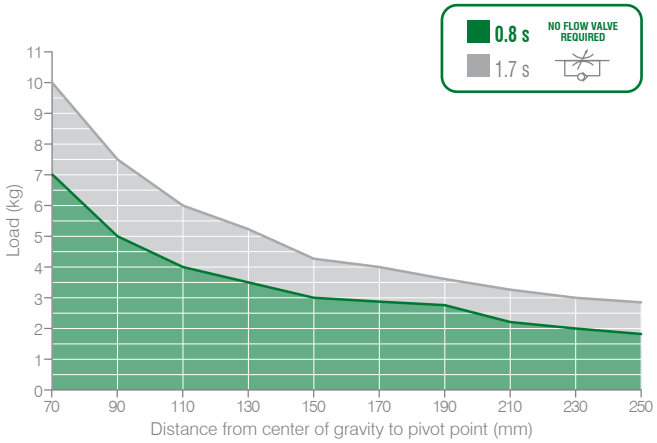

- **Clamping moment (at 5 bar / 72.5 psi)**
  185 N m / 136,44 lb·ft

- **Holding moment**
  800 N m / 590,04 lb·ft

The above data are meant for correct working conditions of the clamp with the same performance level during its life time.
For applications which exceed the above data, please contact our sales representatives.

HE1P2E

- **Air consumption**
  Air consumption for complete cycle (opening and closing)
  REV. 00 - 31/03/2015

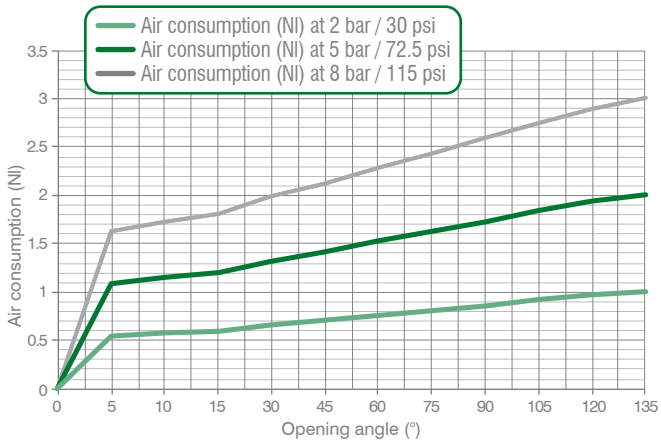

- **Tooling weight chart**
  5 bar operating pressure – 135° opening angle
  REV. 00 - 17/06/2015

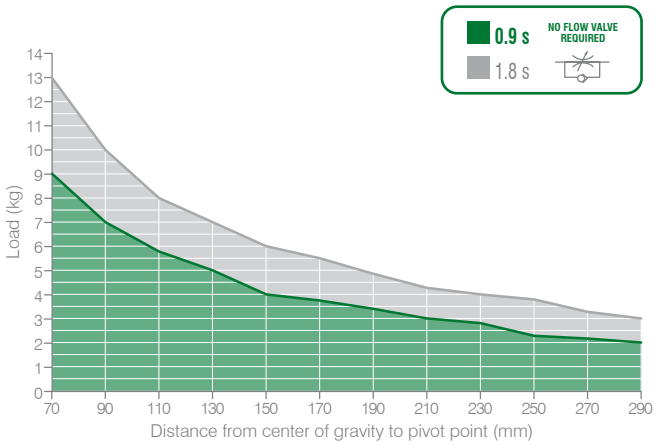

- **Clamping moment (at 5 bar / 72.5 psi)**
  390 N m / 287,64 lb·ft

- **Holding moment**
  1500 N m / 1.106,34 lb·ft

The above data are meant for correct working conditions of the clamp with the same performance level during its life time.
For applications which exceed the above data, please contact our sales representatives.

HE1-Series / Functional charts (continued)

HE1P3E

- **Air consumption**
  Air consumption for complete cycle (opening and closing)
  REV. 00 - 21/01/2016

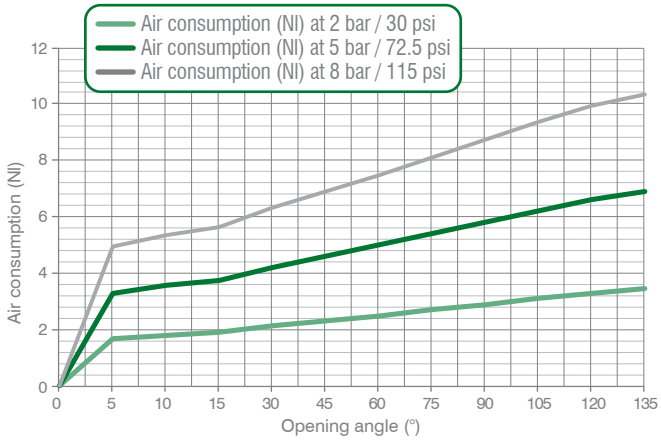

- **Tooling weight chart**
  5 bar operating pressure – 135° opening angle
  REV. 00 - 17/06/2015

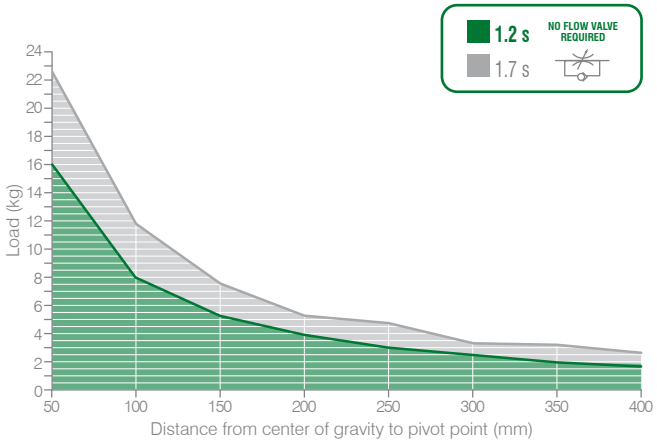

- **Clamping moment (at 5 bar / 72.5 psi)**
  850 N m / 626,92 lb·ft

- **Holding moment**
  2500 N m / 1843,90 lb·ft

The above data are meant for correct working conditions of the clamp with the same performance level during its life time.
For applications which exceed the above data, please contact our sales representatives.

HE1P4E

- **Air consumption**
  Air consumption for complete cycle (opening and closing)
  REV. 00 - 21/01/2016

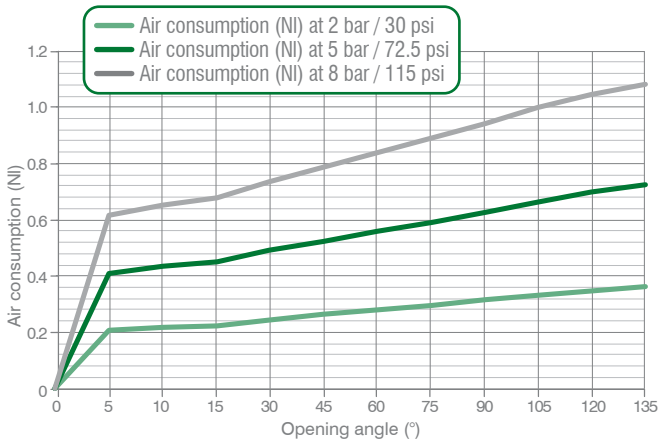

- **Tooling weight chart**
  5 bar operating pressure – 135° opening angle
  REV. 00 - 17/06/2015

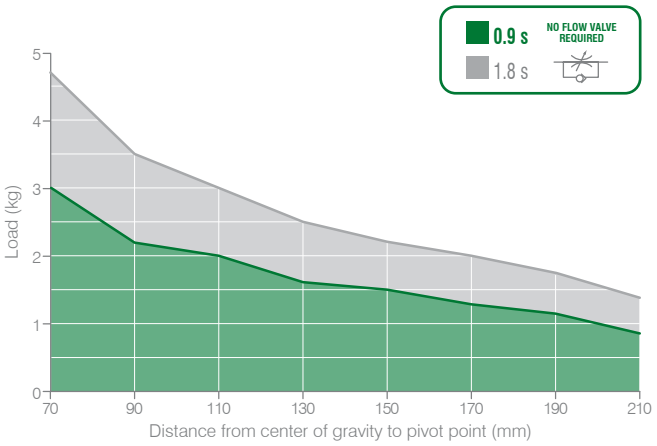

- **Clamping moment (at 5 bar / 72.5 psi)**
  130 N m / 95,88 lb·ft

- **Holding moment**
  380 N m / 280,27 lb·ft

The above data are meant for correct working conditions of the clamp with the same performance level during its life time.
For applications which exceed the above data, please contact our sales representatives.

Technical information are provided for informative purpose only and can be subject to change without prior notice

Ordering string

HE1-Series

HE	1	P	1	E	G	1	A	01

HE	**VERSION**	**HE** = high efficiency clamp
1	**MOUNTING PATTERN**	**1** = International mount
P	**OPERATION**	**P** = pneumatic
1	**SIZE**	**0** = housing size 40 / cylinder Ø 32 mm **1** = housing size 50 / cylinder Ø 40 mm **2** = housing size 63 / cylinder Ø 50 mm **3** = housing size 80 / cylinder Ø 63 mm
E	**SENSOR**	**E** = electronic sensor with M12 swivel connector - PNP **A** = electronic sensor with M12 swivel connector - NPN **N** = no sensor **B** = electronic sensor with M8 swivel connector - PNP
G	**PORTS**	**G** = G thread – BSPP **N** = NPT
1	**ARM MOUNT**	**1** = **2** = **3** = **4** =
A	**ARM MATERIAL**	**A** = aluminum **S** = steel
01	**CLAMP ARM TYPE** * for size 80 mm > 20 mm offset	**01** = wishbone, central, 15 mm offset* **02** = wishbone, right, 15 mm offset* **03** = wishbone, left, 15 mm offset* **04** = wishbone, central, 45 mm offset **05** = wishbone, right, 45 mm offset **06** = wishbone, left, 45 mm offset

HE1-Series

HE	1	P	4	E	G	1	A	54

HE	**VERSION**	**HE** = high efficiency clamp
1	**MOUNTING PATTERN**	**1** = International mount
P	**OPERATION**	**P** = pneumatic
4	**SIZE**	**4** = housing size 40 / cylinder Ø 32 mm Mounting pattern interchangeable to 50 and 63 mm bore clamps
E	**SENSOR**	**E** = electronic sensor with M12 swivel connector - PNP **A** = electronic sensor with M12 swivel connector - NPN **N** = no sensor **B** = electronic sensor with M8 swivel connector - PNP
G	**PORTS**	**G** = G thread – BSPP **N** = NPT
1	**ARM MOUNT**	**1** = **2** = **3** = **4** =
A	**ARM MATERIAL**	**A** = aluminum
54	**CLAMP ARM TYPE**	**54** = wishbone, central, 45 mm offset **55** = wishbone, right, 45 mm offset **56** = wishbone, left, 45 mm offset

HE1P0E / High Efficiency clamp - International mount - Housing size 40 / cylinder Ø 32 mm

WEIGHT 1.36 kg

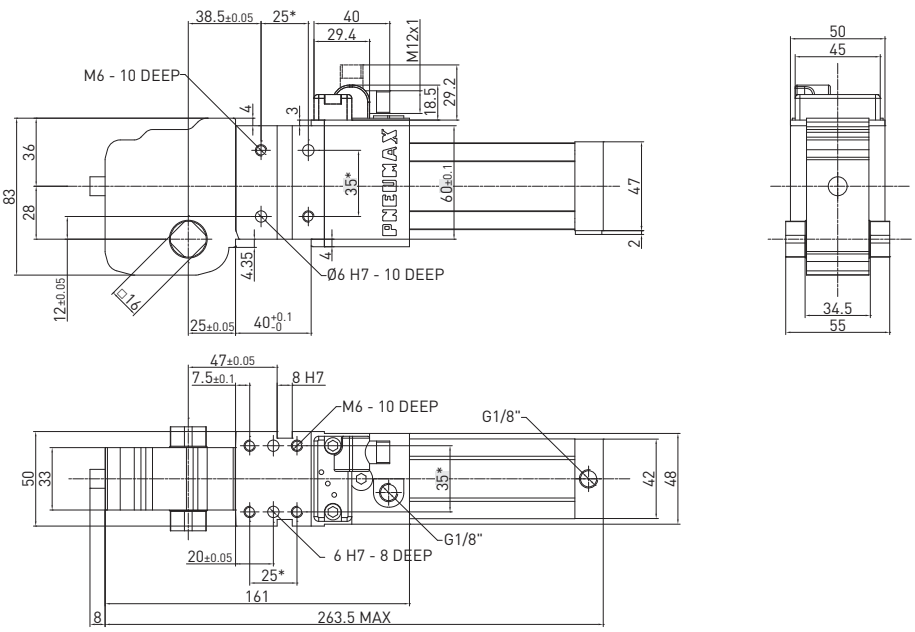

* DIMENSIONAL TOLERANCE FOR DOWEL HOLES: ±0.02

DIMENSIONAL TOLERANCE FOR THREADED HOLES: ±0.1

REV. 00 - 02/10/2015

Clamping arms / 16 mm shaft for clamps' size 40 mm

REV. 02 - 07/10/2015

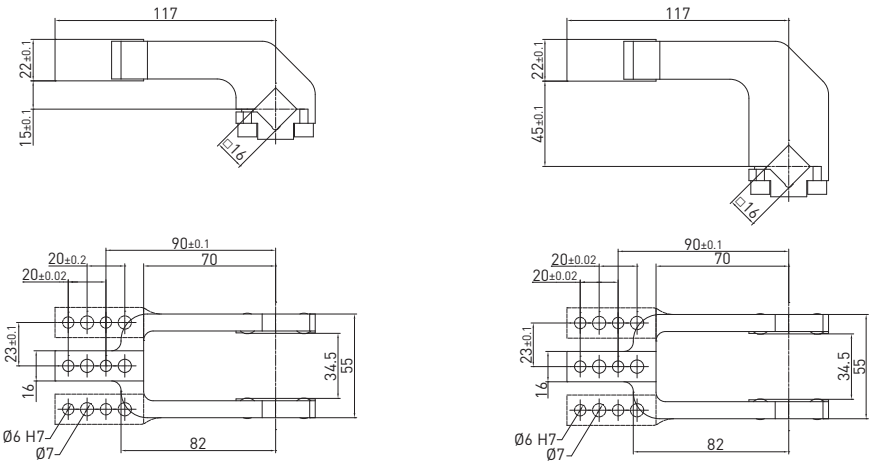

16 mm shaft – 15 mm offset

Part no.	Material	Version	Weight (kg)	Max op. angle pos. 1	Max op. angle pos. 2	Max op. angle pos. 3	Max op. angle pos. 4
B1601	Aluminum	Central	0.24	135°	135°	N/A	45°
Q1601	Steel	Central	0.44	135°	135°	N/A	45°
B1602	Aluminum	Right	0.24	135°	135°	N/A	45°
Q1602	Steel	Right	0.46	135°	135°	N/A	45°
B1603	Aluminum	Left	0.24	135°	135°	N/A	45°
Q1603	Steel	Left	0.46	135°	135°	N/A	45°

Screws: M6x20 **Tightening torque:** 10 N m / 7.37 lb ft

16 mm shaft – 45 mm offset

Part no.	Material	Version	Weight (kg)	Max op. angle pos. 1	Max op. angle pos. 2	Max op. angle pos. 3	Max op. angle pos. 4
B1604	Aluminum	Central	0.3	135°	135°	N/A	45°
Q1604	Steel	Central	0.55	135°	135°	N/A	45°
B1605	Aluminum	Right	0.3	135°	135°	N/A	45°
Q1605	Steel	Right	0.57	135°	135°	N/A	45°
B1606	Aluminum	Left	0.3	135°	135°	N/A	45°
Q1606	Steel	Left	0.57	135°	135°	N/A	45°

Screws: M6x20 **Tightening torque:** 10 N m / 7.37 lb ft

Technical information are provided for informative purpose only and can be subject to change without prior notice

HE1P1E / High Efficiency clamp - International mount - Housing size 50 / cylinder Ø 40 mm

WEIGHT 2.53 kg

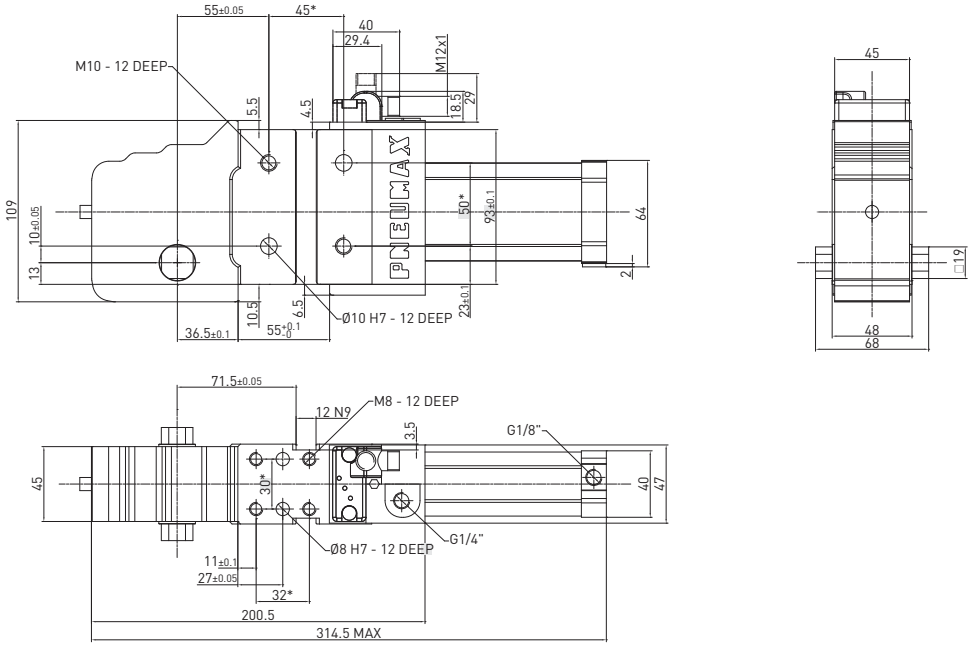

* DIMENSIONAL TOLERANCE FOR DOWEL HOLES: ±0.02

DIMENSIONAL TOLERANCE FOR THREADED HOLES: ±0.1

REV. 02 - 29/03/2019

Clamping arms / 19 mm shaft for clamps' size 50 mm

REV. 01 - 08/02/2019

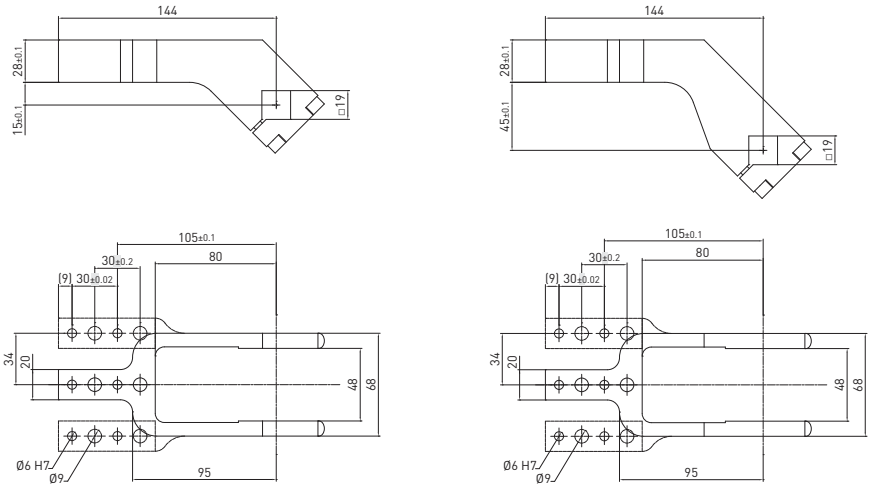

19 mm shaft – 15 mm offset

Part no.	Material	Version	Weight (kg)	Max op. angle pos. 1	Max op. angle pos. 2	Max op. angle pos. 3	Max op. angle pos. 4
B1901	Aluminum	Central	0.41	135°	115°	135°	80°
Q1901	Steel	Central	0.71	135°	115°	135°	80°
B1902	Aluminum	Right	0.43	135°	115°	135°	80°
Q1902	Steel	Right	0.79	135°	115°	135°	80°
B1903	Aluminum	Left	0.43	135°	115°	135°	80°
Q1903	Steel	Left	0.79	135°	115°	135°	80°

Screws: M6x25 **Tightening torque:** 10 N m

19 mm shaft – 45 mm offset

Part no.	Material	Version	Weight (kg)	Max op. angle pos. 1	Max op. angle pos. 2	Max op. angle pos. 3	Max op. angle pos. 4
B1904	Aluminum	Central	0.45	135°	135°	135°	80°
Q1904	Steel	Central	0.77	135°	135°	135°	80°
B1905	Aluminum	Right	0.46	135°	135°	135°	80°
Q1905	Steel	Right	0.81	135°	135°	135°	80°
B1906	Aluminum	Left	0.46	135°	135°	135°	80°
Q1906	Steel	Left	0.81	135°	135°	135°	80°

Screws: M6x25 **Tightening torque:** 10 N m

HE1P2E / **High Efficiency clamp** - International mount - Housing size 63 / cylinder Ø 50 mm

WEIGHT 3.3 kg

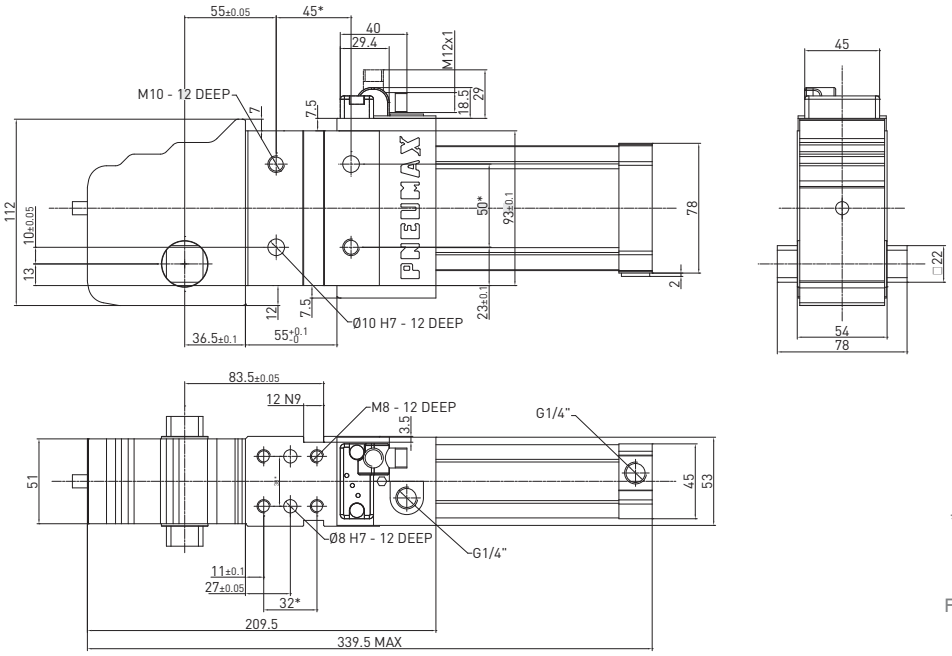

* DIMENSIONAL TOLERANCE FOR DOWEL HOLES: ±0.02

DIMENSIONAL TOLERANCE FOR THREADED HOLES: ±0.1

REV. 00 - 31/03/2015

Clamping arms / 22 mm shaft

REV. 01 - 08/02/2019

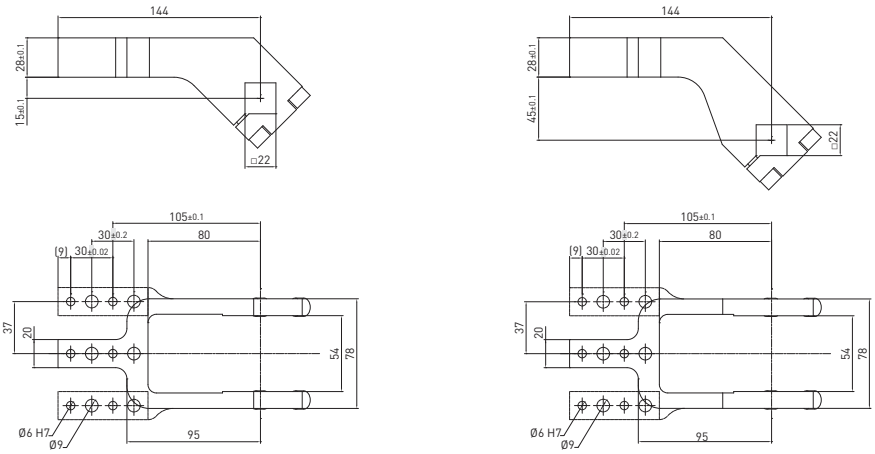

22 mm shaft – 15 mm offset

Part no.	Material	Version	Weight (kg)	Max op. angle pos. 1	Max op. angle pos. 2	Max op. angle pos. 3	Max op. angle pos. 4
B2201	**Aluminum**	**Central**	**0.52**	**135°**	**115°**	**135°**	**80°**
Q2201	**Steel**	**Central**	**0.9**	**135°**	**115°**	**135°**	**80°**
B2202	**Aluminum**	**Right**	**0.54**	**135°**	**115°**	**135°**	**80°**
Q2202	**Steel**	**Right**	**0.93**	**135°**	**115°**	**135°**	**80°**
B2203	**Aluminum**	**Left**	**0.54**	**135°**	**115°**	**135°**	**80°**
Q2203	**Steel**	**Left**	**0.93**	**135°**	**115°**	**135°**	**80°**

Screws: M8x25 **Tightening torque:** 25 N m

22 mm shaft – 45 mm offset

Part no.	Material	Version	Weight (kg)	Max op. angle pos. 1	Max op. angle pos. 2	Max op. angle pos. 3	Max op. angle pos. 4
B2204	**Aluminum**	**Central**	**0.57**	**135°**	**135°**	**135°**	**75°**
Q2204	**Steel**	**Central**	**0.98**	**135°**	**135°**	**135°**	**75°**
B2205	**Aluminum**	**Right**	**0.58**	**135°**	**135°**	**135°**	**75°**
Q2205	**Steel**	**Right**	**1.02**	**135°**	**135°**	**135°**	**75°**
B2206	**Aluminum**	**Left**	**0.58**	**135°**	**135°**	**135°**	**75°**
Q2206	**Steel**	**Left**	**1.02**	**135°**	**135°**	**135°**	**75°**

Screws: M8x25 **Tightening torque:** 25 N m

Technical information are provided for informative purpose only and can be subject to change without prior notice

HE1P3E / **High Efficiency clamp** - International mount - Housing size 80 / cylinder Ø 63 mm

WEIGHT 7.55 kg

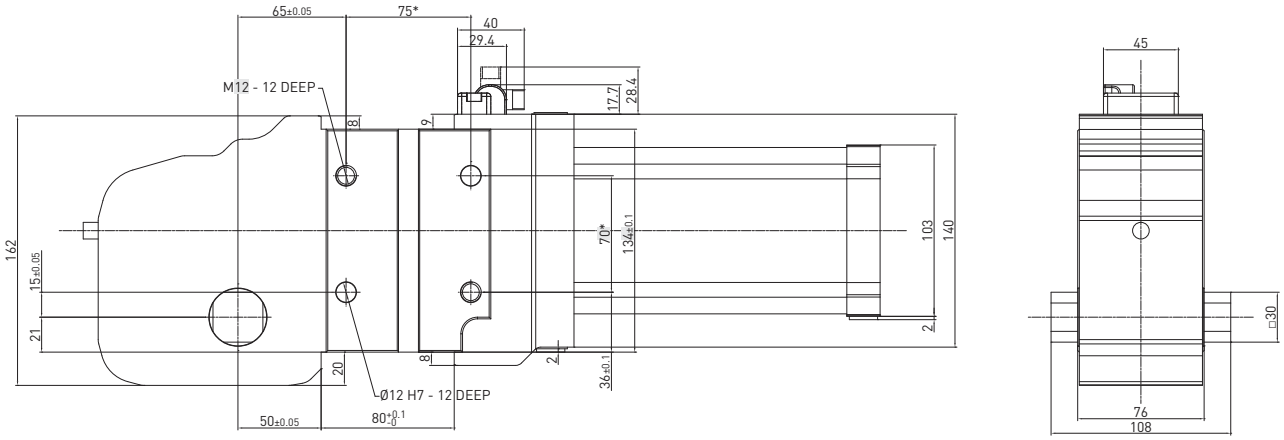

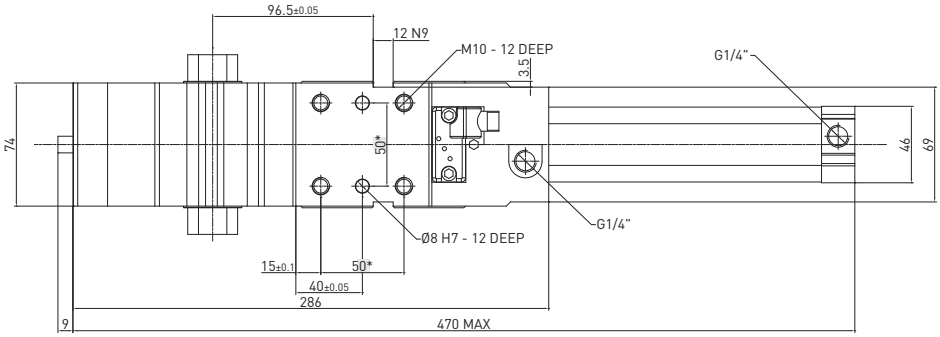

* DIMENSIONAL TOLERANCE
FOR DOWEL HOLES: ±0.02

DIMENSIONAL TOLERANCE
FOR THREADED HOLES: ±0.1

REV. 00 - 20/10/2015

CLAMPING

CLAMPING

Clamping arms / 30 mm shaft

REV. 01 - 08/02/2019

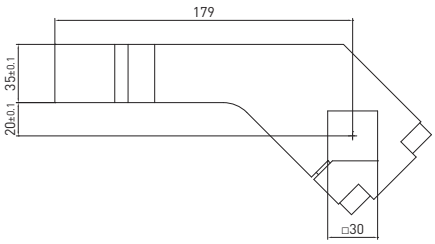

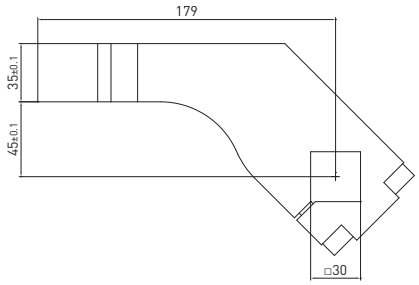

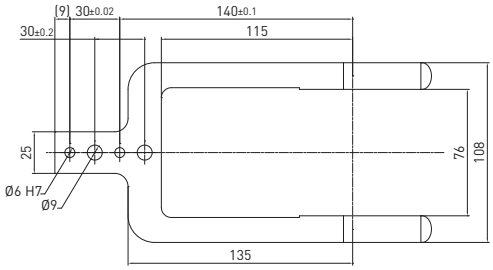

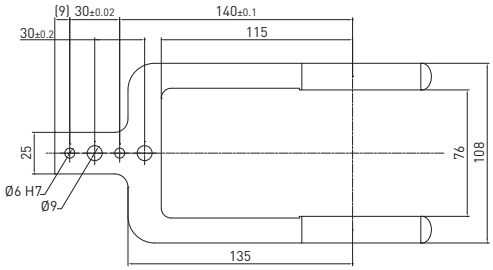

30 mm shaft – 20 mm offset

Part no.	Material	Version	Weight (kg)	Max op. angle pos. 1	Max op. angle pos. 2	Max op. angle pos. 3	Max op. angle pos. 4
B3001	**Aluminum**	**Central**	**1.1**	**135°**	**110°**	**135°**	**75°**
B3002	**Aluminum**	**Right**	**1.15**	**135°**	**110°**	**135°**	**75°**
B3003	**Aluminum**	**Left**	**1.15**	**135°**	**110°**	**135°**	**75°**

Screws: M10x40 **Tightening torque:** 35 N m / 25.81 lb ft

30 mm shaft – 45 mm offset

Part no.	Material	Version	Weight (kg)	Max op. angle pos. 1	Max op. angle pos. 2	Max op. angle pos. 3	Max op. angle pos. 4
B3004	**Aluminum**	**Central**	**1.18**	**135°**	**110°**	**135°**	**75°**
B3005	**Aluminum**	**Right**	**1.2**	**135°**	**110°**	**135°**	**75°**
B3006	**Aluminum**	**Left**	**1.2**	**135°**	**110°**	**135°**	**75°**

Screws: M10x40 **Tightening torque:** 35 N m / 25.81 lb ft

Technical information are provided for informative purpose only and can be subject to change without prior notice

CLAMPING

HE1P4EG / **Power clamp** - 32 mm bore cylinder and mounting pattern interchangeable to 50 and 63 mm bore clamps

WEIGHT 1.36 kg

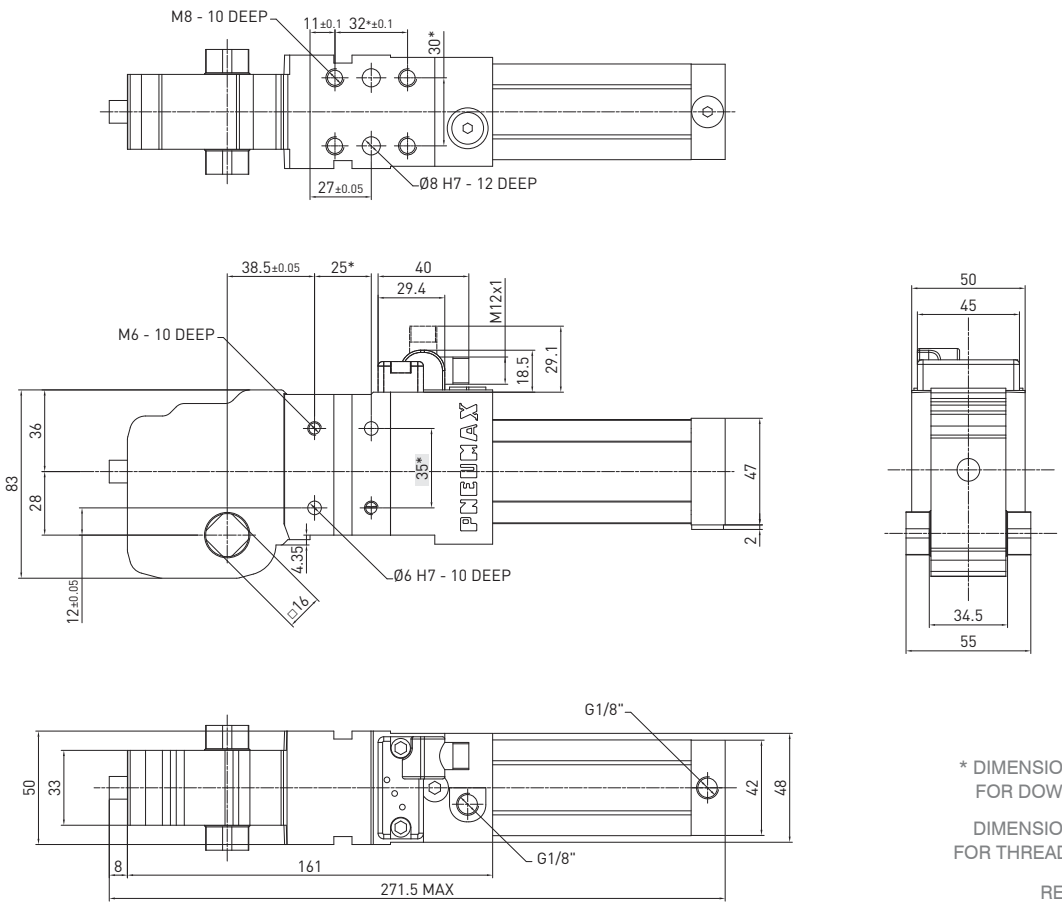

* DIMENSIONAL TOLERANCE FOR DOWEL HOLES: ±0.02

DIMENSIONAL TOLERANCE FOR THREADED HOLES: ±0.1

REV. 00 - 23/04/2019

Clamping arms / 16 mm shaft

REV. 00 - 23/04/2019

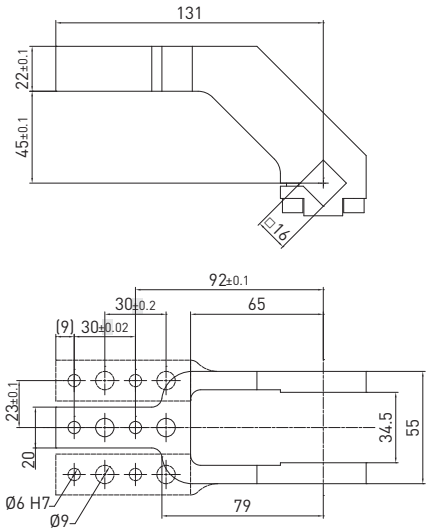

16 mm shaft – 45 mm offset

Part no.	Material	Version	Weight (kg)	Max op. angle pos. 1	Max op. angle pos. 2	Max op. angle pos. 3	Max op. angle pos. 4
B1654	**Aluminum**	**Central**	**0.3**	**135°**	**135°**	**N/A**	**45°**
B1655	**Aluminum**	**Right**	**0.3**	**135°**	**135°**	**N/A**	**45°**
B1656	**Aluminum**	**Left**	**0.3**	**135°**	**135°**	**N/A**	**45°**

Screws: M6x20 **Tightening torque:** 10 N m / 7.37 lb ft

CLAMPING

HE2-Series

High efficiency power clamps conforming to the NAAMS Standard

GLOBAL STANDARD COMPONENTS NAAMS

Patented

Air consumption saving up to 41%

The perfect combination between **functionality** and **efficiency**: same clamping moment, same holding moment, same overall and functional dimensions, same load capacity of a standard clamp with International and NAAMS mounts available.

Technical features

Manual release button to open the linkage when air pressure is removed during setup. **Pneumatic ports on both sides** of the cylinder.

Operating features	
Operating pressure	from 2 to 8 bar / from 30 to 115 psi
Lubrication	all the devices are lubricated for life at the factory. Inline air lubrication isn't required

Functional charts

HE2P1E

- **Air consumption**
  Air consumption for complete cycle (opening and closing)
  REV. 00 - 31/03/2015

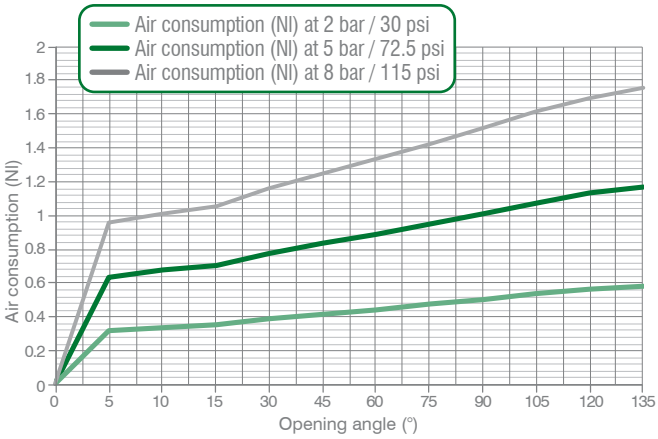

- **Tooling weight chart**
  5 bar operating pressure – 135° opening angle
  REV. 00 - 17/06/2015

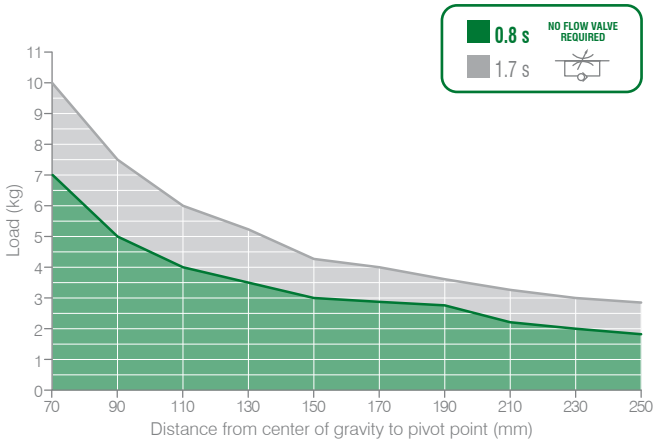

- **Clamping moment (at 5 bar / 72.5 psi)**
  185 N m / 136,44 lb·ft

- **Holding moment**
  800 N m / 590,04 lb·ft

The above data are meant for correct working conditions of the clamp with the same performance level during its life time.
For applications which exceed the above data, please contact our sales representatives.

Technical information are provided for informative purpose only and can be subject to change without prior notice

HE2P2E

- **Air consumption**
  Air consumption for complete cycle (opening and closing)
  REV. 00 - 31/03/2015

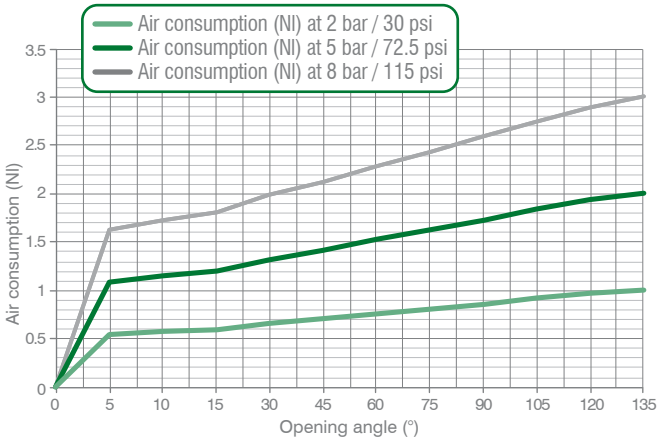

- **Tooling weight chart**
  5 bar operating pressure – 135° opening angle
  REV. 00 - 17/06/2015

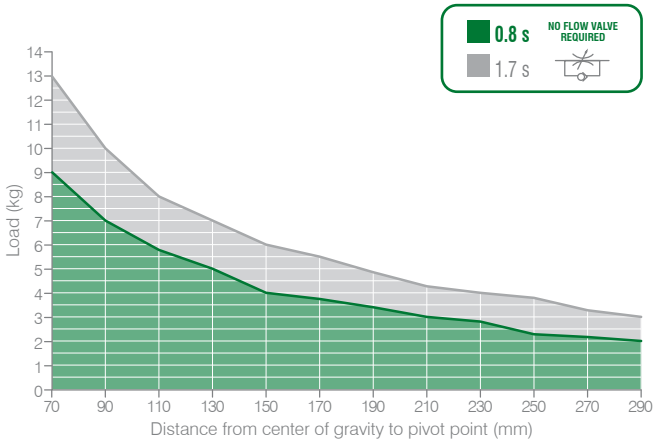

- **Clamping moment (at 5 bar / 72.5 psi)**
  390 N m / 287,64 lb·ft

- **Holding moment**
  1500 N m / 1.106,34 lb·ft

The above data are meant for correct working conditions of the clamp with the same performance level during its life time.
For applications which exceed the above data, please contact our sales representatives.

HE2P3E

- **Air consumption**
  Air consumption for complete cycle (opening and closing)
  REV. 00 - 21/01/2016

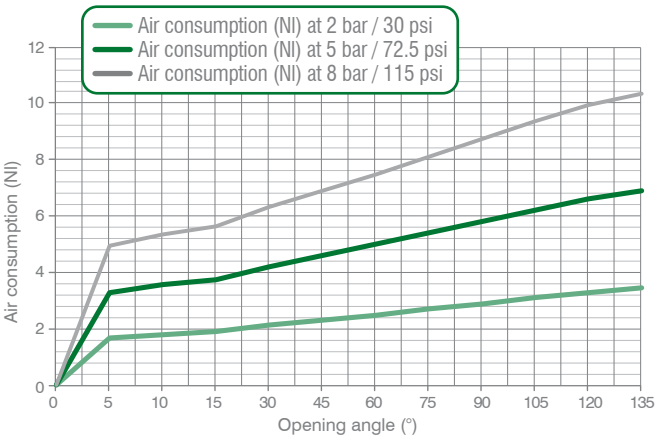

- **Tooling weight chart**
  5 bar operating pressure – 135° opening angle
  REV. 00 - 17/06/2015

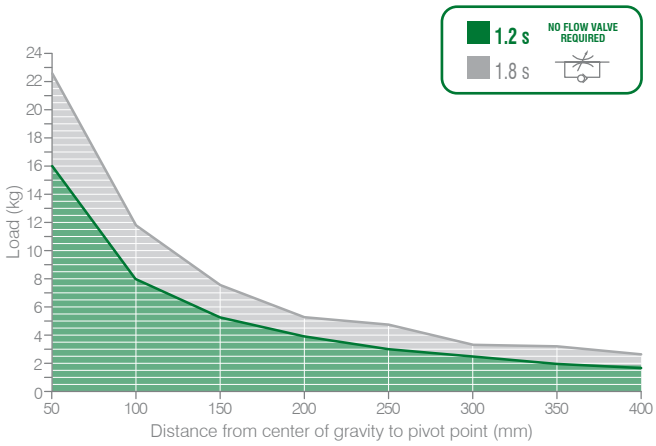

- **Clamping moment (at 5 bar / 72.5 psi)**
  850 N m / 626,92 lb·ft

- **Holding moment**
  2500 N m / 1.843,90 lb·ft

The above data are meant for correct working conditions of the clamp with the same performance level during its life time.
For applications which exceed the above data, please contact our sales representatives.

CLAMPING

HE2-Series / Ordering string

HE2-Series

HE	2	P	2	E	G	L

HE	VERSION	**HE** = high efficiency clamp
2	MOUNTING PATTERN	**2** = NAAMS Standard
P	OPERATION	**P** = pneumatic
2	SIZE	**1** = housing size 50 / cylinder Ø 40 mm **2** = housing size 63 / cylinder Ø 50 mm **3** = housing size 80 / cylinder Ø 63 mm
E	SENSOR	**E** = electronic sensor with M12 swivel connector - PNP **A** = electronic sensor with M12 swivel connector - NPN **N** = no sensor **B** = electronic sensor with M8 swivel connector - PNP
G	PORTS	**G** = G thread – BSPP **N** = NPT
L	SHAFT OUTPUT	**_** = dual output **L** = single output - LEFT **R** = single output - RIGHT

Please see the charts in the datasheets
for arm position as well as for max. opening angle.
NAAMS clamping arms to be ordered separately
*for size 3 > 20 mm offset

HE2P1E / **High Efficiency clamp** - NAAMS Std - Housing size 50/cylinder Ø 40 mm

WEIGHT 2.5 kg

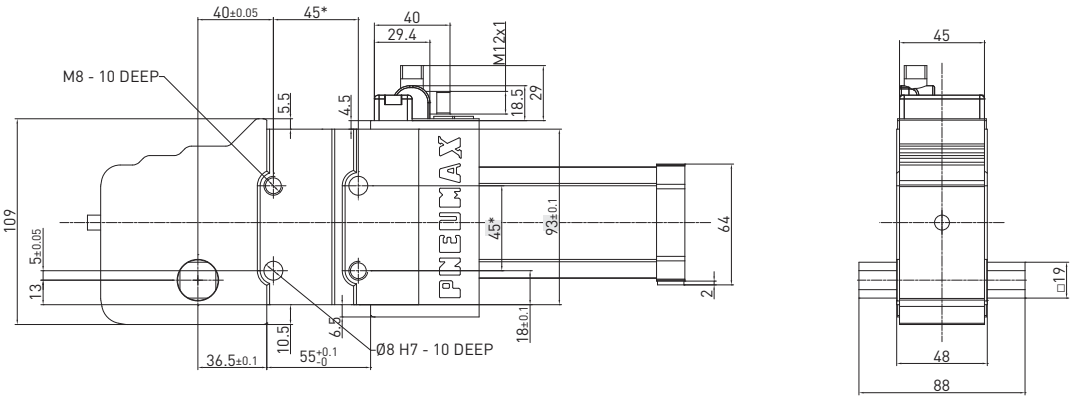

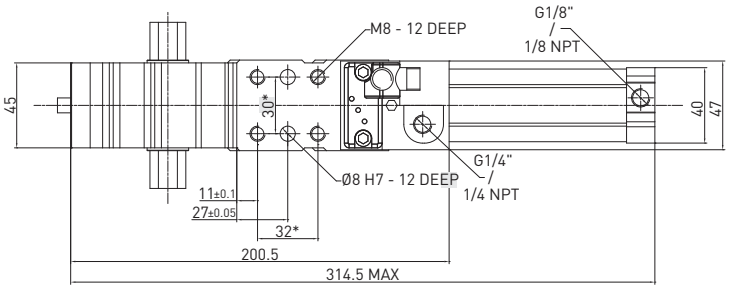

* DIMENSIONAL TOLERANCE
FOR DOWEL HOLES: ±0.02

DIMENSIONAL TOLERANCE
FOR THREADED HOLES: ±0.1

REV. 02 - 29/03/2019

Technical information are provided for informative purpose only and can be subject to change without prior notice

Clamping arms / 19 mm shaft - NAAMS Std

REV 03 - 29/03/2019

0 mm OFFSET

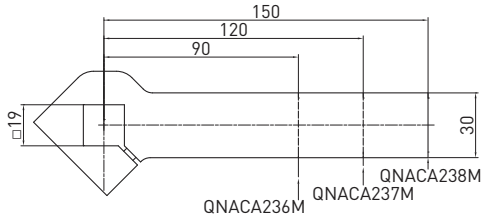

25 mm OFFSET

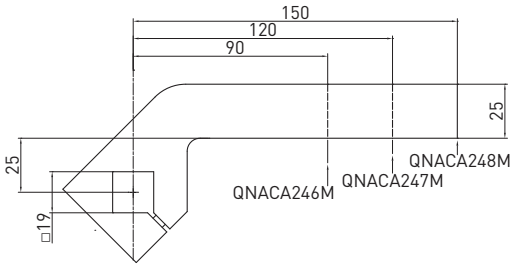

50 mm OFFSET

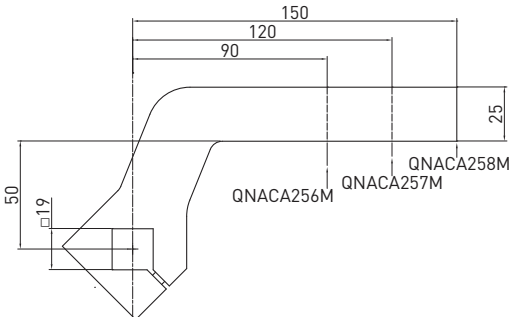

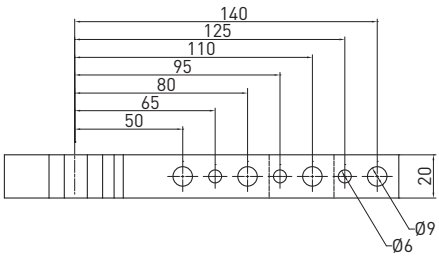

19 mm shaft – 0 mm offset

Part no.	Material	Length (mm)	Weight (kg)	Max op. angle pos. 1	Max op. angle pos. 2	Max op. angle pos. 3	Max op. angle pos. 4
QNACA236M	**Steel**	**90**	**0.4**	**135°**	**135°**	**135°**	**135°**
QNACA237M	**Steel**	**120**	**0.49**	**135°**	**135°**	**135°**	**135°**
QNACA238M	**Steel**	**150**	**0.58**	**135°**	**135°**	**135°**	**135°**

Screws: M6x25 **Tightening torque:** 10 N m / 7.37 lb·ft

19 mm shaft – 25 mm offset

Part no.	Material	Length (mm)	Weight (kg)	Max op. angle pos. 1	Max op. angle pos. 2	Max op. angle pos. 3	Max op. angle pos. 4
QNACA246M	**Steel**	**90**	**0.44**	**135°**	**135°**	**135°**	**135°**
QNACA247M	**Steel**	**120**	**0.52**	**135°**	**135°**	**135°**	**135°**
QNACA248M	**Steel**	**150**	**0.6**	**135°**	**135°**	**135°**	**135°**

Screws: M6x25 **Tightening torque:** 10 N m / 7.37 lb·ft

19 mm shaft – 50 mm offset

Part no.	Material	Length (mm)	Weight (kg)	Max op. angle pos. 1	Max op. angle pos. 2	Max op. angle pos. 3	Max op. angle pos. 4
QNACA256M	**Steel**	**90**	**0.52**	**135°**	**135°**	**135°**	**135°**
QNACA257M	**Steel**	**120**	**0.6**	**135°**	**135°**	**135°**	**135°**
QNACA258M	**Steel**	**150**	**0.68**	**135°**	**135°**	**135°**	**135°**

Screws: M6x25 **Tightening torque:** 10 N m / 7.37 lb·ft

HE2P2E / **High efficiency clamp** - NAAMS Std - Housing size 63 / cylinder Ø 50 mm

WEIGHT 2.8 kg

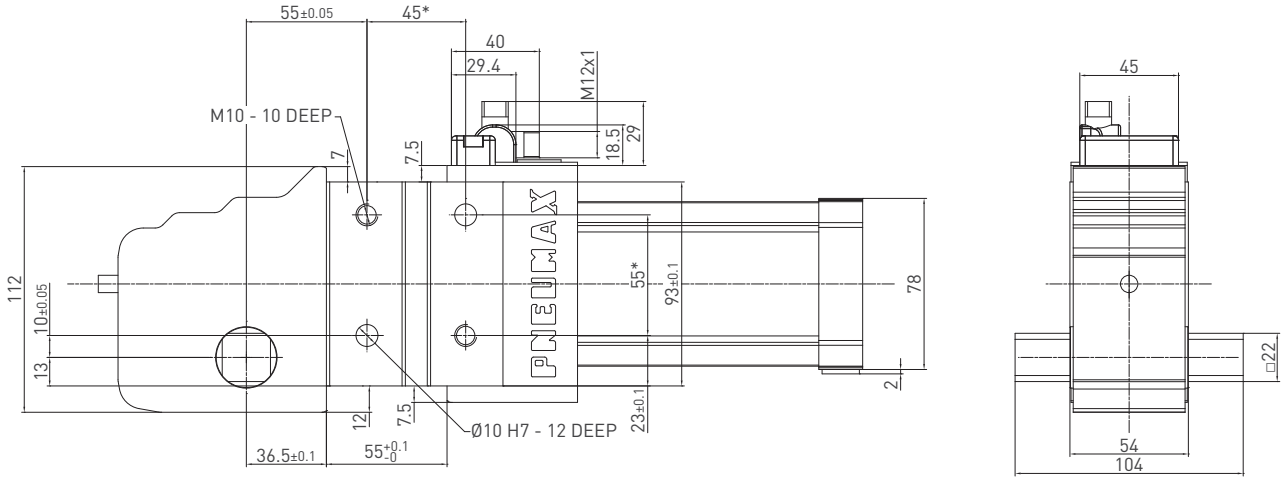

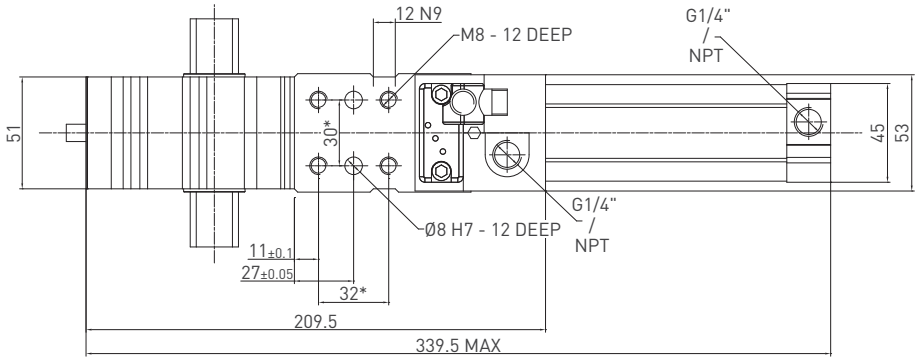

* DIMENSIONAL TOLERANCE FOR DOWEL HOLES: ±0.02

DIMENSIONAL TOLERANCE FOR THREADED HOLES: ±0.1

REV. 00 - 02/10/2015

Technical information are provided for informative purpose only and can be subject to change without prior notice

Clamping arms / 22 mm shaft - NAAMS Std

REV 02 - 29/03/2019

0 mm OFFSET

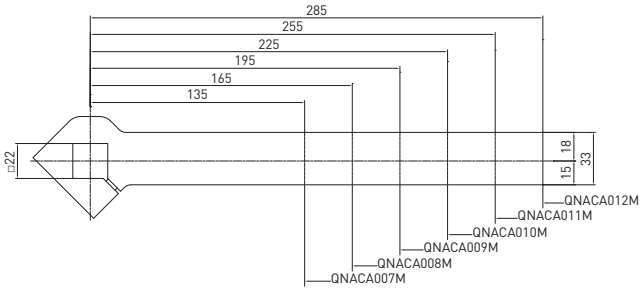

25 mm OFFSET

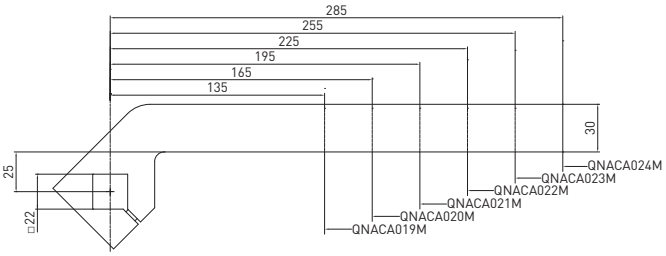

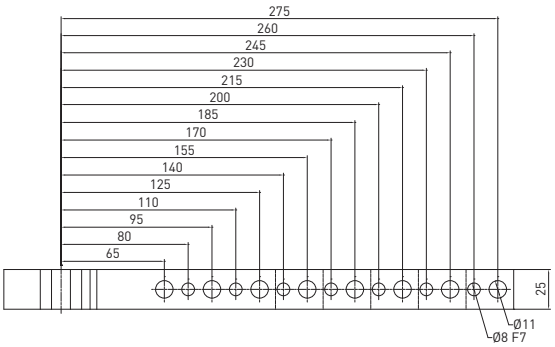

22 mm shaft – 0 mm offset

Part no.	Material	Length (mm)	Weight (kg)	Max op. angle pos. 1	Max op. angle pos. 2	Max op. angle pos. 3	Max op. angle pos. 4
QNACA007M	**Steel**	**135**	**0.72**	**135°**	**135°**	**135°**	**135°**
QNACA008M	**Steel**	**165**	**0.83**	**135°**	**135°**	**135°**	**135°**
QNACA009M	**Steel**	**195**	**0.94**	**135°**	**135°**	**135°**	**135°**
QNACA010M	**Steel**	**225**	**1.05**	**135°**	**135°**	**135°**	**135°**
QNACA011M	**Steel**	**255**	**1.16**	**135°**	**135°**	**135°**	**135°**
QNACA012M	**Steel**	**285**	**1.28**	**135°**	**135°**	**135°**	**135°**

Screws: M8x25 **Tightening torque:** 25 N m / 18.43 lb ft

22 mm shaft – 25 mm offset

Part no.	Material	Length (mm)	Weight (kg)	Max op. angle pos. 1	Max op. angle pos. 2	Max op. angle pos. 3	Max op. angle pos. 4
QNACA019M	**Steel**	**135**	**0.84**	**135°**	**135°**	**135°**	**135°**
QNACA020M	**Steel**	**165**	**0.95**	**135°**	**135°**	**135°**	**135°**
QNACA021M	**Steel**	**195**	**1.05**	**135°**	**135°**	**135°**	**135°**
QNACA022M	**Steel**	**225**	**1.16**	**135°**	**135°**	**135°**	**135°**
QNACA023M	**Steel**	**255**	**1.26**	**135°**	**135°**	**135°**	**135°**
QNACA024M	**Steel**	**285**	**1.37**	**135°**	**135°**	**135°**	**135°**

Screws: M8x25 **Tightening torque:** 25 N m / 18.43 lb ft

CLAMPING

Clamping arms / 22 mm shaft - NAAMS Std

REV. 01 - 31/07/2015

70 mm OFFSET

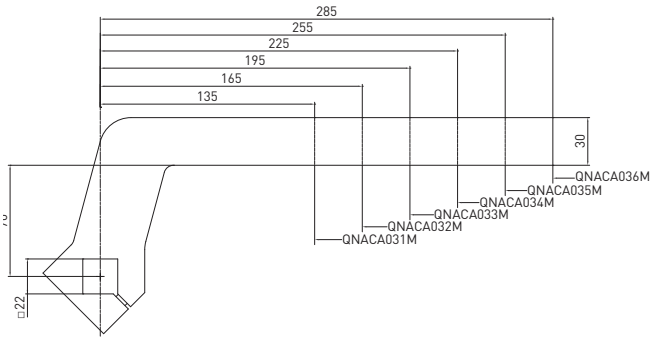

120 mm OFFSET

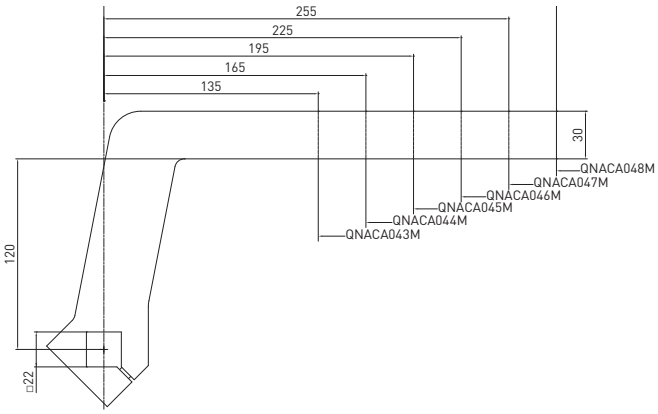

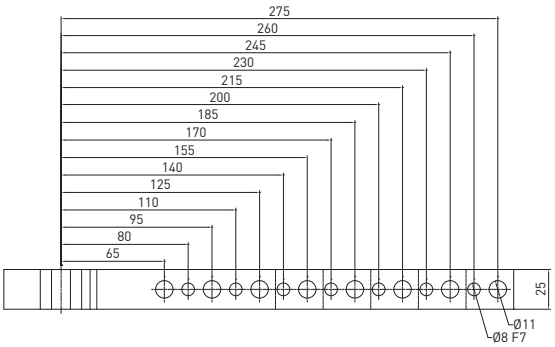

22 mm shaft – 70 mm offset

Part no.	Material	Length (mm)	Weight (kg)	Max op. angle pos. 1	Max op. angle pos. 2	Max op. angle pos. 3	Max op. angle pos. 4
QNACA031M	**Steel**	**135**	**1.05**	**135°**	**135°**	**135°**	**135°**
QNACA032M	**Steel**	**165**	**1.16**	**135°**	**135°**	**135°**	**135°**
QNACA033M	**Steel**	**195**	**1.27**	**135°**	**135°**	**135°**	**135°**
QNACA034M	**Steel**	**225**	**1.38**	**135°**	**135°**	**135°**	**135°**
QNACA035M	**Steel**	**255**	**1.49**	**135°**	**135°**	**135°**	**135°**
QNACA036M	**Steel**	**285**	**1.6**	**135°**	**135°**	**135°**	**135°**

Screws: M8X25 **Tightening torque:** 25 N m / 18.43 lb ft

22 mm shaft – 120 mm offset

Part no.	Material	Length (mm)	Weight (kg)	Max op. angle pos. 1	Max op. angle pos. 2	Max op. angle pos. 3	Max op. angle pos. 4
QNACA043M	**Steel**	**135**	**1.27**	**135°**	**135°**	**135°**	**135°**
QNACA044M	**Steel**	**165**	**1.37**	**135°**	**135°**	**135°**	**135°**
QNACA045M	**Steel**	**195**	**1.48**	**135°**	**135°**	**135°**	**135°**
QNACA046M	**Steel**	**225**	**1.58**	**135°**	**135°**	**135°**	**135°**
QNACA047M	**Steel**	**255**	**1.69**	**135°**	**135°**	**135°**	**135°**
QNACA048M	**Steel**	**285**	**1.8**	**135°**	**135°**	**135°**	**135°**

Screws: M8X25 **Tightening torque:** 25 N m / 18.43 lb ft

Technical information are provided for informative purpose only and can be subject to change without prior notice

HE2P3E / **High Efficiency clamp** - NAAMS Std - Housing size 80 / cylinder Ø 63 mm

WEIGHT 7.76 kg

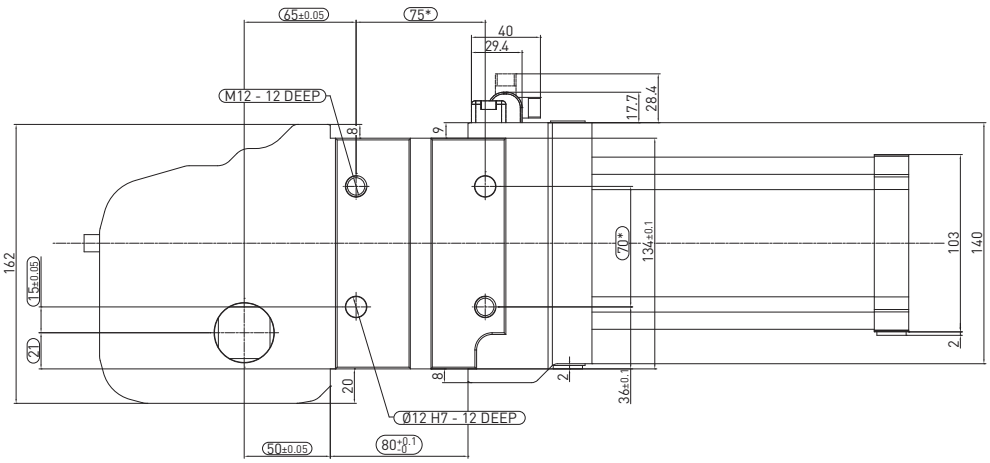

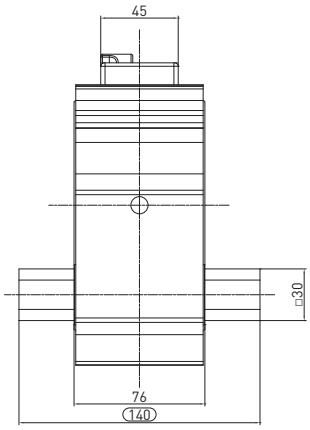

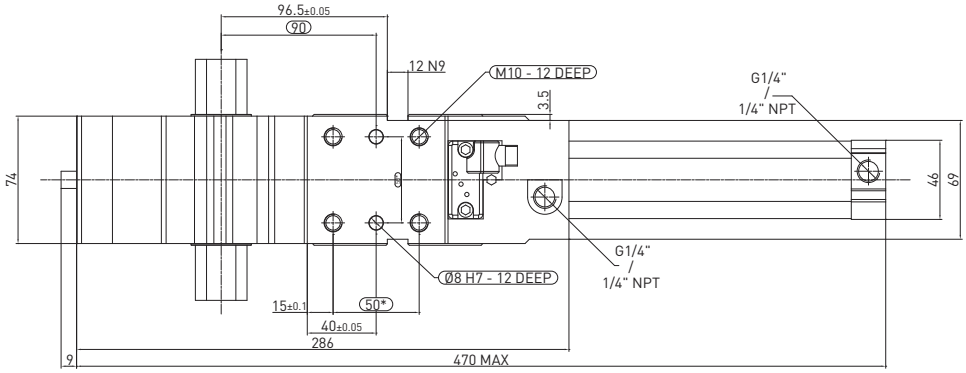

* DIMENSIONAL TOLERANCE FOR DOWEL HOLES: ±0.02

DIMENSIONAL TOLERANCE FOR THREADED HOLES: ±0.1

REV. 00 - 20/10/2015

CLAMPING

CLAMPING

Clamping arms / 30 mm shaft - NAAMS Std

REV. 01 - 31/03/2015

0 mm OFFSET

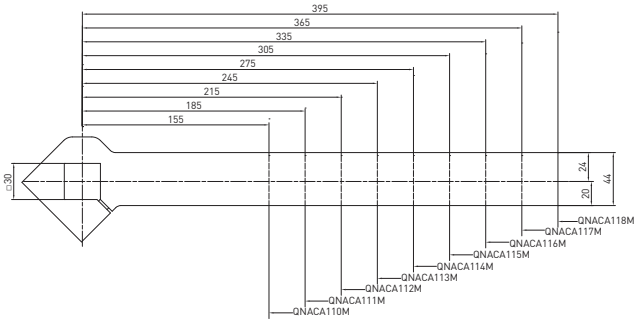

25 mm OFFSET

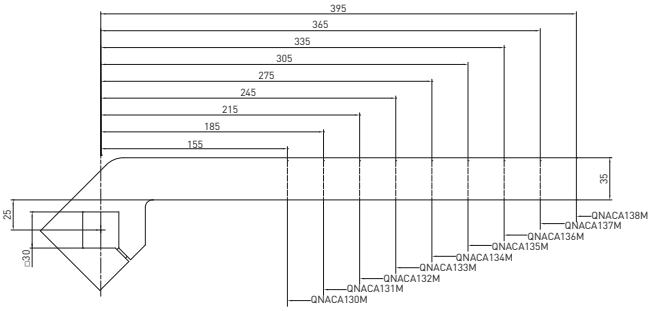

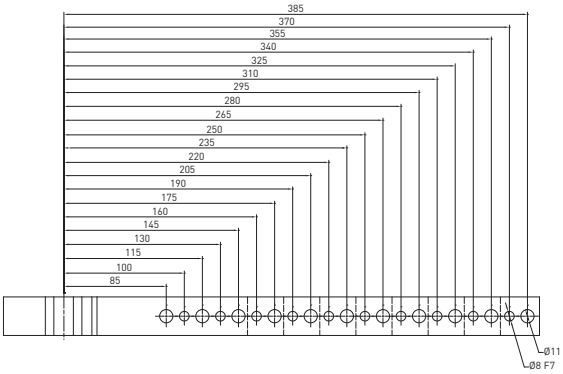

30 mm shaft – 0 mm offset

Part no.	Material	Length (mm)	Weight (kg)	Max op. angle pos. 1	Max op. angle pos. 2	Max op. angle pos. 3	Max op. angle pos. 4
QNACA110M	Steel	155	1.41	135°	135°	135°	135°
QNACA111M	Steel	185	1.58	135°	135°	135°	135°
QNACA112M	Steel	215	1.76	135°	135°	135°	135°
QNACA113M	Steel	245	1.93	135°	135°	135°	135°
QNACA114M	Steel	275	2.1	135°	135°	135°	135°
QNACA115M	Steel	305	2.27	135°	135°	135°	135°
QNACA116M	Steel	335	2.45	135°	135°	135°	135°
QNACA117M	Steel	365	2.62	135°	135°	135°	135°
QNACA118M	Steel	395	2.8	135°	135°	135°	135°

Screws: M10x40 **Tightening torque:** 35 N m / 25.81 lb ft

30 mm shaft – 25 mm offset

Part no.	Material	Length (mm)	Weight (kg)	Max op. angle pos. 1	Max op. angle pos. 2	Max op. angle pos. 3	Max op. angle pos. 4
QNACA130M	Steel	155	1.24	135°	135°	135°	135°
QNACA131M	Steel	185	1.39	135°	135°	135°	135°
QNACA132M	Steel	215	1.54	135°	135°	135°	135°
QNACA133M	Steel	245	1.69	135°	135°	135°	135°
QNACA134M	Steel	275	1.84	135°	135°	135°	135°
QNACA135M	Steel	305	2	135°	135°	135°	135°
QNACA136M	Steel	335	2.14	135°	135°	135°	135°
QNACA137M	Steel	365	2.29	135°	135°	135°	135°
QNACA138M	Steel	395	2.45	135°	135°	135°	135°

Screws: M10x40 **Tightening torque:** 35 N m / 25.81 lb ft

Technical information are provided for informative purpose only and can be subject to change without prior notice

Clamping arms / 30 mm shaft - NAAMS Std

REV. 01 - 31/03/2015

70 mm OFFSET

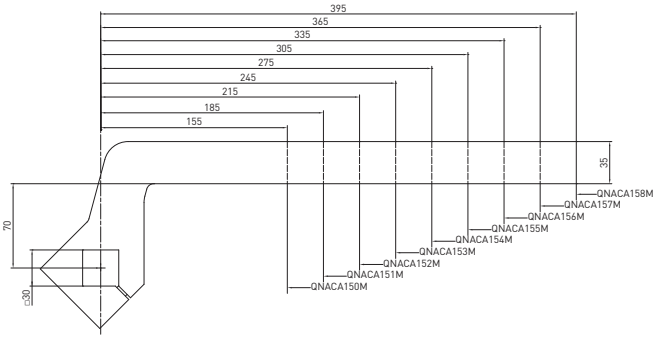

120 mm OFFSET

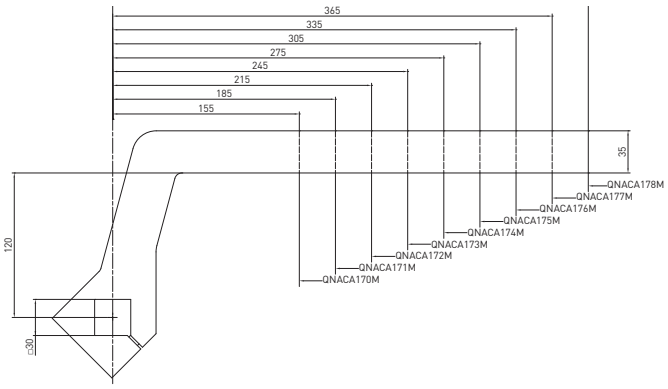

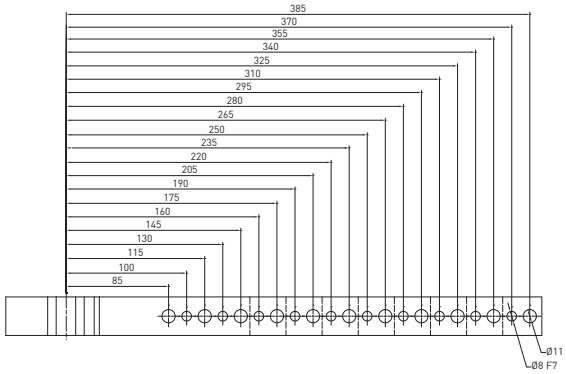

30 mm shaft – 70 mm offset

Part no.	Material	Length (mm)	Weight (kg)	Max op. angle pos. 1	Max op. angle pos. 2	Max op. angle pos. 3	Max op. angle pos. 4
QNACA150M	Steel	155	1.7	135°	135°	135°	135°
QNACA151M	Steel	185	1.85	135°	135°	135°	135°
QNACA152M	Steel	215	2	135°	135°	135°	135°
QNACA153M	Steel	245	2.15	135°	135°	135°	135°
QNACA154M	Steel	275	2.3	135°	135°	135°	135°
QNACA155M	Steel	305	2.45	135°	135°	135°	135°
QNACA156M	Steel	335	2.6	135°	135°	135°	135°
QNACA157M	Steel	365	2.76	135°	135°	135°	135°
QNACA158M	Steel	395	2.92	135°	135°	135°	135°

Screws: M10x40 **Tightening torque:** 35 N m / 25.81 lb ft

30 mm shaft – 120 mm offset

Part no.	Material	Length (mm)	Weight (kg)	Max op. angle pos. 1	Max op. angle pos. 2	Max op. angle pos. 3	Max op. angle pos. 4
QNACA170M	Steel	155	1.97	135°	135°	135°	135°
QNACA171M	Steel	185	2.12	135°	135°	135°	135°
QNACA172M	Steel	215	2.27	135°	135°	135°	135°
QNACA173M	Steel	245	2.42	135°	135°	135°	135°
QNACA174M	Steel	275	2.57	135°	135°	135°	135°
QNACA175M	Steel	305	2.72	135°	135°	135°	135°
QNACA176M	Steel	335	2.87	135°	135°	135°	135°
QNACA177M	Steel	365	3.02	135°	135°	135°	135°
QNACA178M	Steel	395	3.19	135°	135°	135°	135°

Screws: M10x40 **Tightening torque:** 35 N m / 25.81 lb ft

CX-Series

Power clamps for double workpiece identification

International mount - Naams mount

INTERNATIONAL MOUNT

GLOBAL STANDARD COMPONENTS NAAMS

Patented

For critical applications, where it is required to identify the unwilling presence of two metal sheets in the process and to avoid their clamping. This built-in device **allows a reliable double workpiece identification.**

The below end cap shows an **adjustment screw**: by loosening the screw, the inlet pressure is adjusted, i.e. reduced to the minimum required to guarantee the **clamping of a single workpiece**, not of two metal sheets. The toggle linkage is therefore prevented from engaging (no toggle lock) and consequently the sensor will not detect the closed position and will signal the anomaly.
Once the clamp is properly adjusted from the below end cap screw, to be able to clamp a single workpiece, **it will be able to detect the false condition in case a second workpiece is inadvertently set on the tooling.**

Instructions

The adjustment cannot be performed without air.

1. Install the clamp on the fixture by using all 4 screws and dowels. If mounted on the side, use the key slot.
2. Check the shimming and make sure that that with 5/ 5.5 bars the clamp is operating smoothly (0.3 or less shimming is optimal).
3. Place the workpiece and clamp it. Make sure you get the red led signal for closed position.
4. Open the clamp.
5. Use, further to the workpiece, a thickness gauge (a feeler or a shim) whose thickness is half the thickness of the workpiece.
6. Close the clamp and tighten the screw slightly. Operate the clamp and check if the closed position signal is lost. In this way, the pressure is reduced and the cylinder won't get enough push force to engage the toggle linkage.

7. Open and close a few times, then double check with two workpieces and no red led light will be on, in such a condition.
8. If ok, tighten the bolt behind the screw to avoid its loosening.

Technical features	
Manual release button to open the linkage when air pressure is removed during setup. **Pneumatic ports on both sides** of the cylinder.	
Operating features	
Operating pressure	from 2 to 8 bar / from 30 to 115 psi
Lubrication	all the devices are lubricated for life at the factory. Inline air lubrication isn't required

Technical information are provided for informative purpose only and can be subject to change without prior notice

Functional charts

Size 40 mm

- **Tooling weight chart**
  5 bar operating pressure – 135° opening angle
  REV. 00 - 17/06/2015

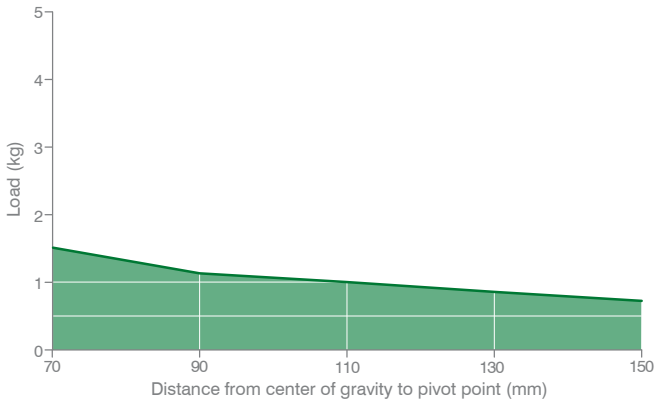

- **Holding moment**
  380 N m / 280,27 lb·ft

Size 50 mm

- **Tooling weight chart**
  5 bar operating pressure – 135° opening angle
  REV. 00 - 17/06/2015

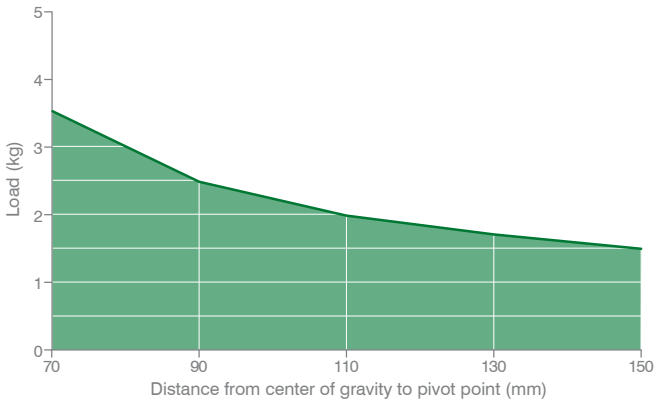

- **Holding moment**
  800 N m / 590,04 lb·ft

Size 63 mm

- **Tooling weight chart**
  5 bar operating pressure – 135° opening angle
  REV. 00 - 17/06/2015

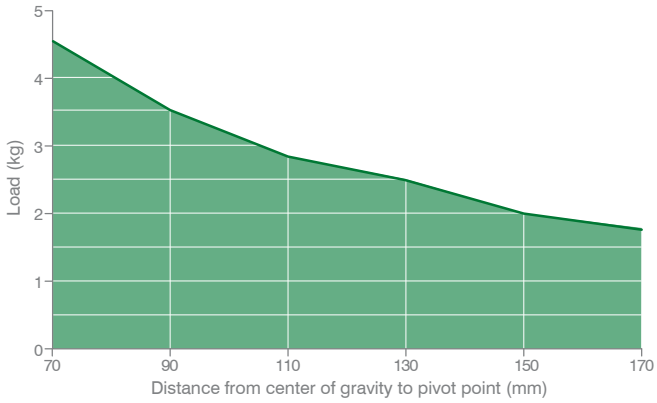

- **Holding moment**
  1.500 N m / 1.106,34 lb·ft

CLAMPING

CX-Series / Ordering string

CX-Series

C	1	X	40	E	G	1	A	01

C	VERSION	**C** = clamp
1	MOUNTING PATTERN	**1** = International mount **2** = NAAMS Standard
X	OPERATION	**X** = double workpiece identification
40	SIZE	**40** = 40 mm **63** = Ø 63 mm **50** = Ø 50 mm
E	SENSOR	**E** = electronic sensor with M12 swivel connector - PNP **A** = electronic sensor with M12 swivel connector - NPN **N** = no sensor **B** = electronic sensor with M8 swivel connector - PNP
G	PORTS	**G** = G thread – BSPP **N** = NPT
1	ARM MOUNT	**1** = **2** = **3** = **4** =
A	ARM MATERIAL	**A** = aluminum **S** = steel
01	CLAMP ARM TYPE	**01** = wishbone, central, 15 mm offset **02** = wishbone, right, 15 mm offset **03** = wishbone, left, 15 mm offset **04** = wishbone, central, 45 mm offset **05** = wishbone, right, 45 mm offset **06** = wishbone, left, 45 mm offset

Please see the charts in the datasheets for arm position as well as for max. opening angle. NAAMS clamping arms to be ordered separately

C1X40E / Clamp with double workpiece identification - International mount - 40 mm bore

WEIGHT 1.6 kg

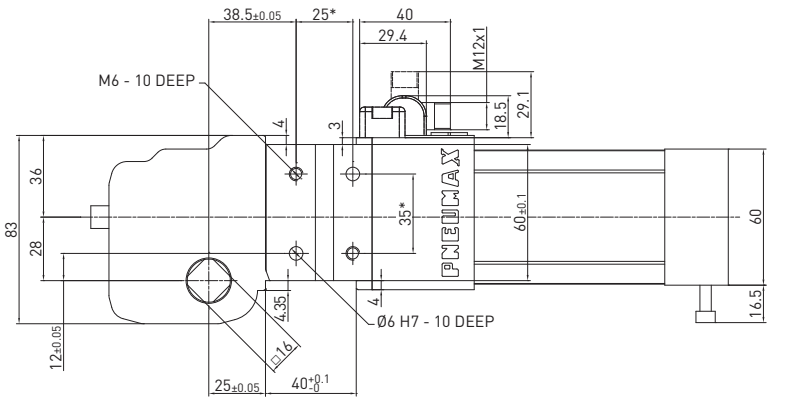

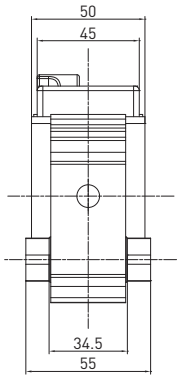

* DIMENSIONAL TOLERANCE FOR DOWEL HOLES: ±0.02

DIMENSIONAL TOLERANCE FOR THREADED HOLES: ±0.1

REV. 00 - 20/08/2018

Technical information are provided for informative purpose only and can be subject to change without prior notice

C1X50E / Clamp with double workpiece identification - International mount - 50 mm bore

WEIGHT 2.9 kg

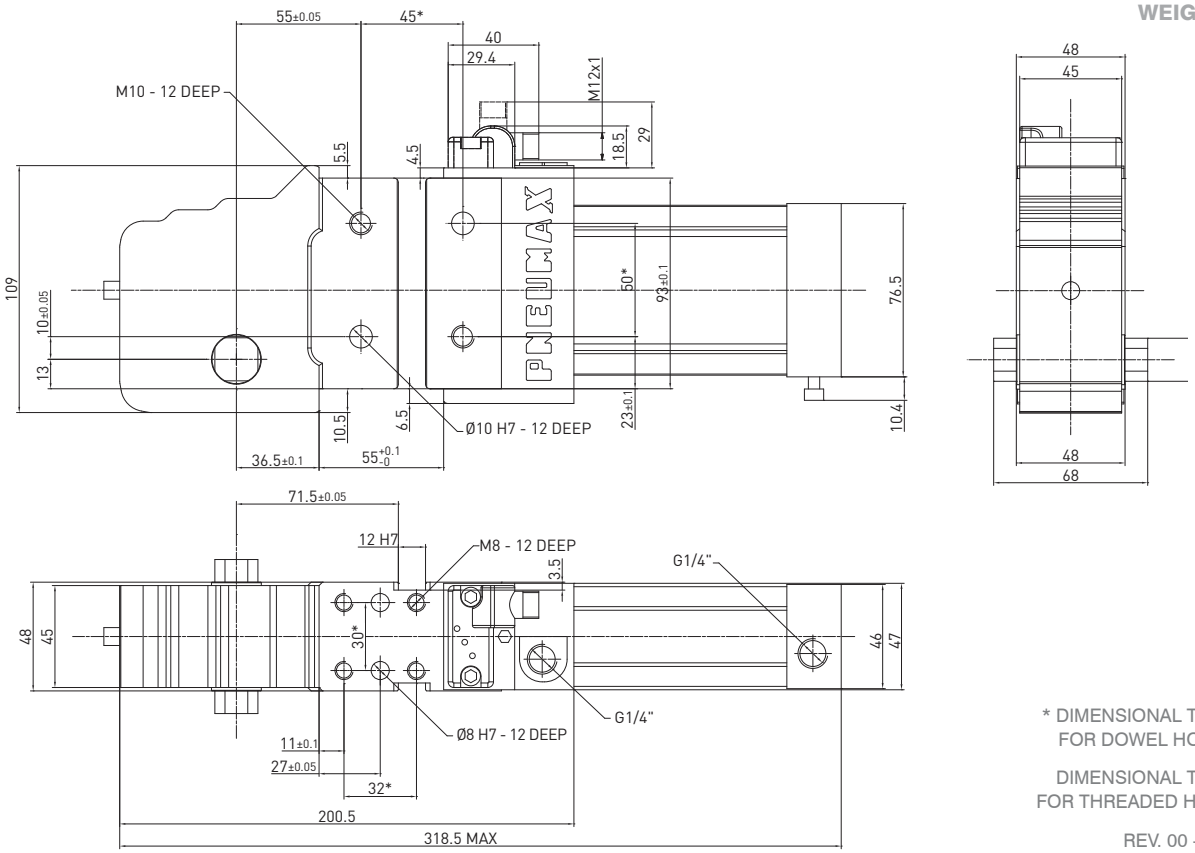

* DIMENSIONAL TOLERANCE FOR DOWEL HOLES: ±0.02

DIMENSIONAL TOLERANCE FOR THREADED HOLES: ±0.1

REV. 00 - 20/08/2018

C1X63E / Clamp with double workpiece identification - International mount - 63 mm bore

WEIGHT 3.7 kg

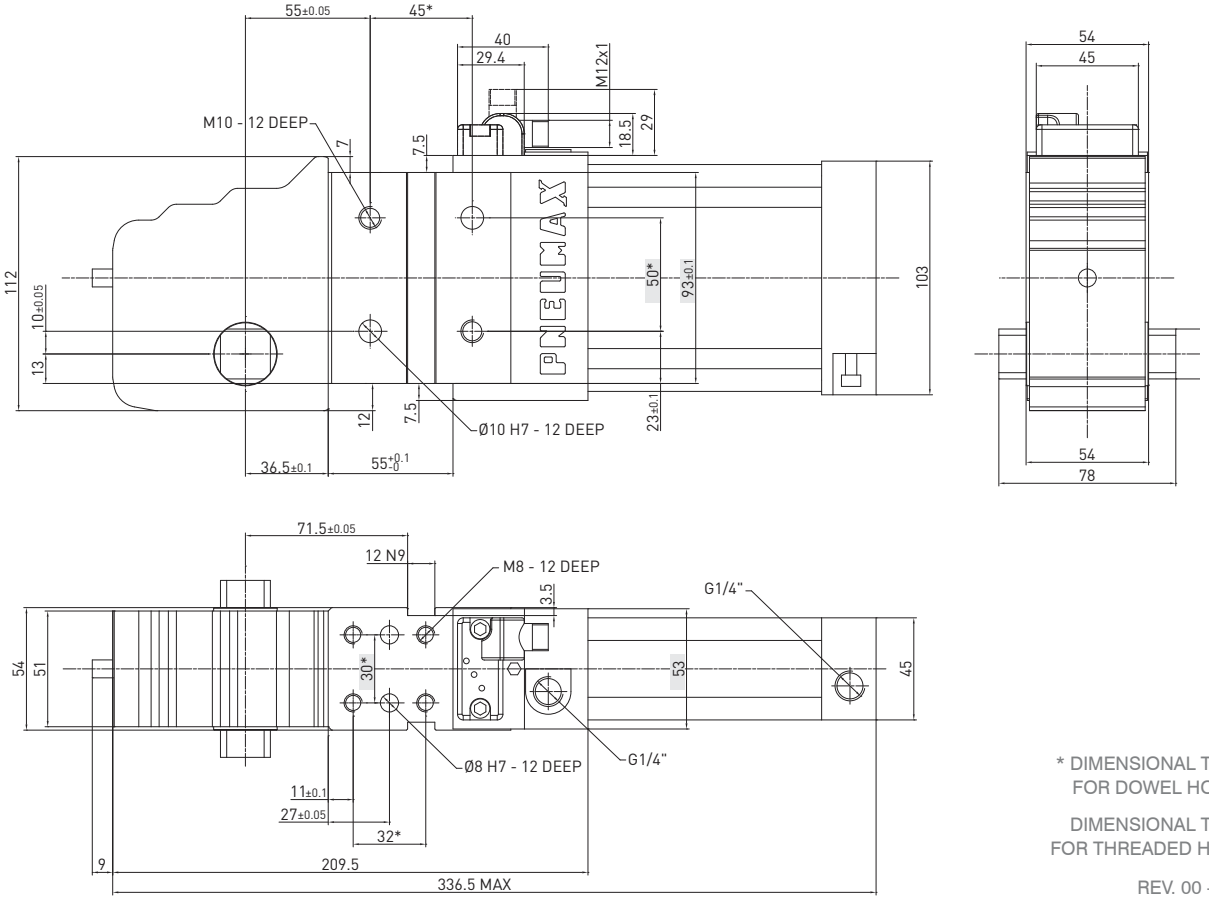

* DIMENSIONAL TOLERANCE FOR DOWEL HOLES: ±0.02

DIMENSIONAL TOLERANCE FOR THREADED HOLES: ±0.1

REV. 00 - 20/09/2018

CLAMPING

C2X50E / Clamp with double workpiece identification - NAAMS Std - 50 mm bore

WEIGHT 2.95 kg

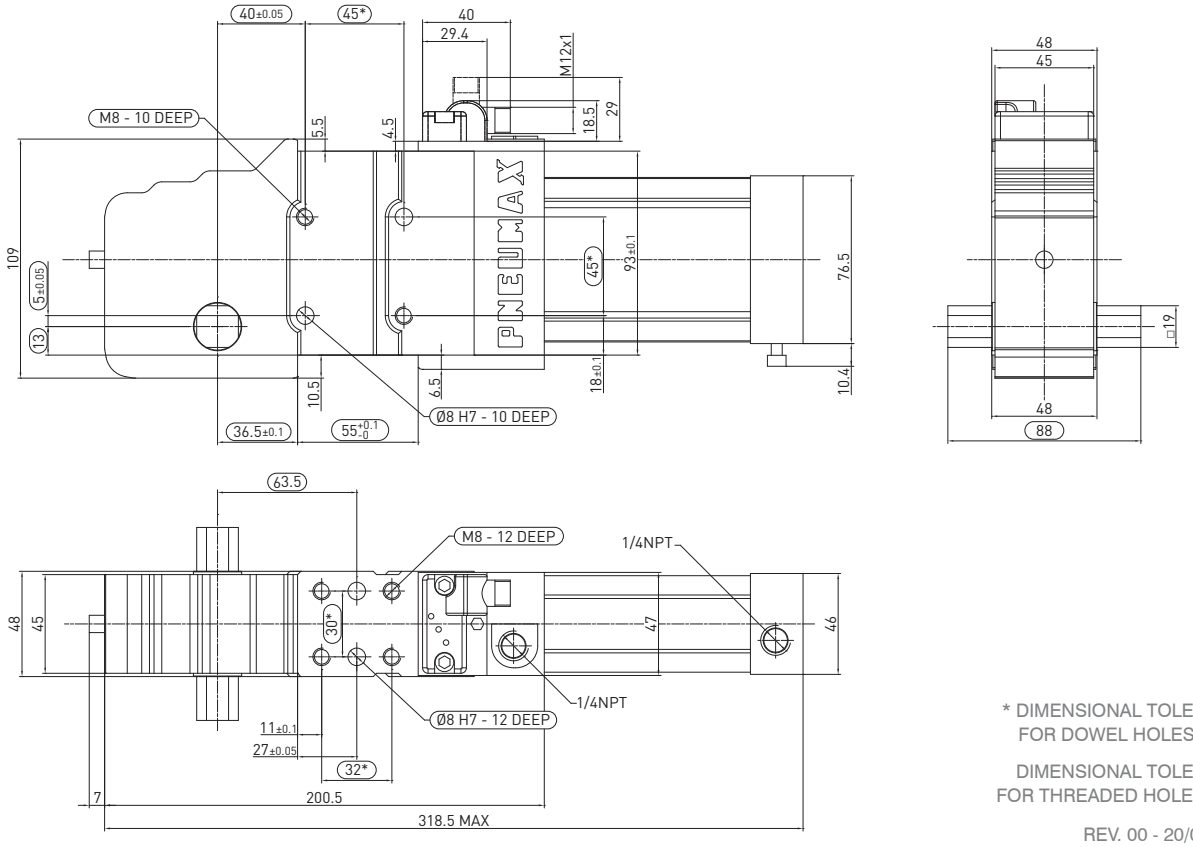

* DIMENSIONAL TOLERANCE FOR DOWEL HOLES: ±0.02

DIMENSIONAL TOLERANCE FOR THREADED HOLES: ±0.1

REV. 00 - 20/09/2018

C2X63E / Clamp with double workpiece identification - NAAMS Std - 63 mm bore

WEIGHT 3.75 kg

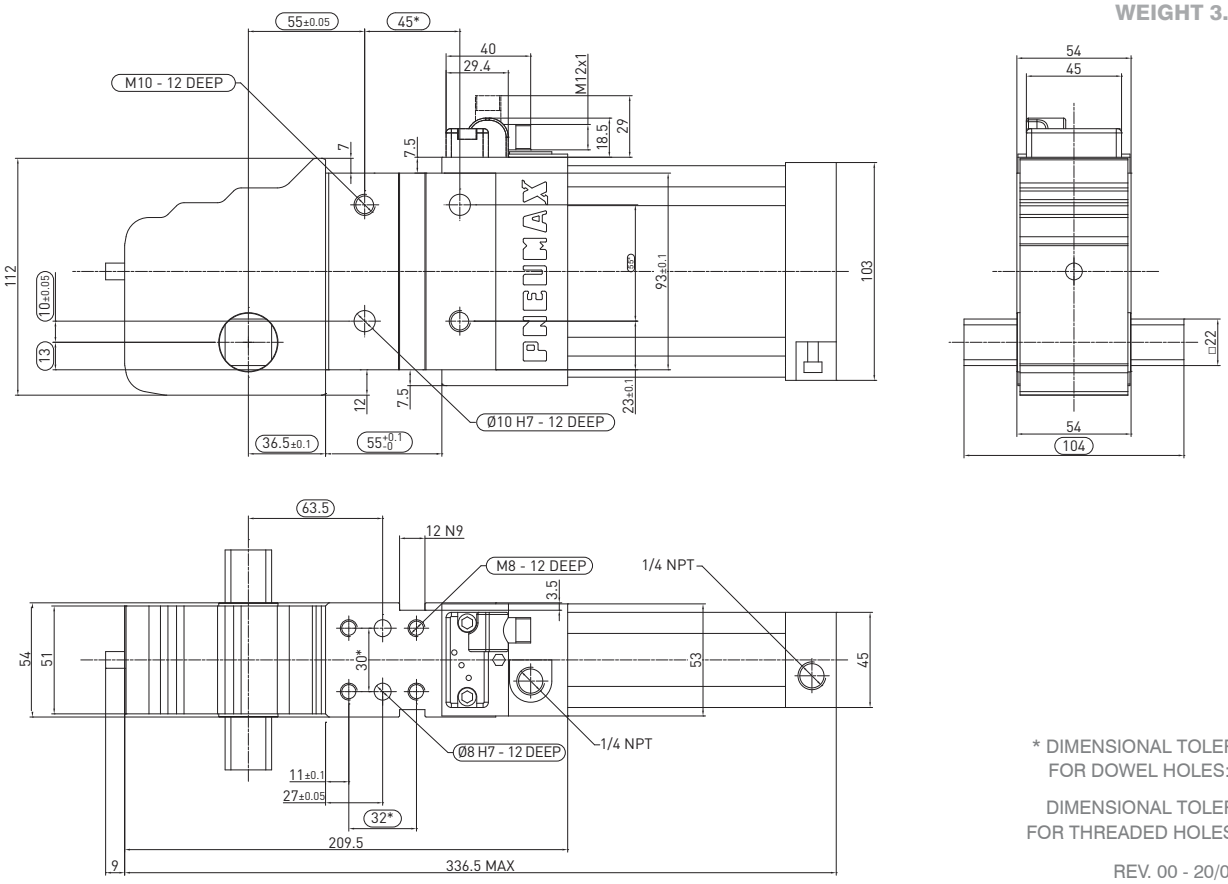

* DIMENSIONAL TOLERANCE FOR DOWEL HOLES: ±0.02

DIMENSIONAL TOLERANCE FOR THREADED HOLES: ±0.1

REV. 00 - 20/09/2018

Technical information are provided for informative purpose only and can be subject to change without prior notice

ADWI14: for clamps size 50 and 63 mm / Devices for double workpiece identification - G 1/4''

WEIGHT 100 g

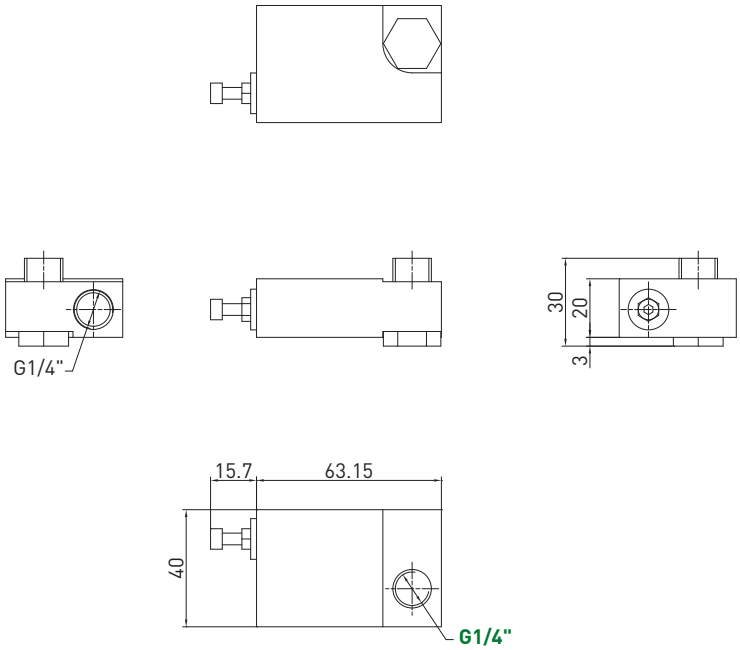

* DIMENSIONAL TOLERANCE
FOR DOWEL HOLES: ±0.02

DIMENSIONAL TOLERANCE
FOR THREADED HOLES: ±0.1

REV. 00 - 20/09/2018

ADWI18: for clamps size 25,32 and 40 mm / Devices for double workpiece identification - G 1/8''

WEIGHT 100 g

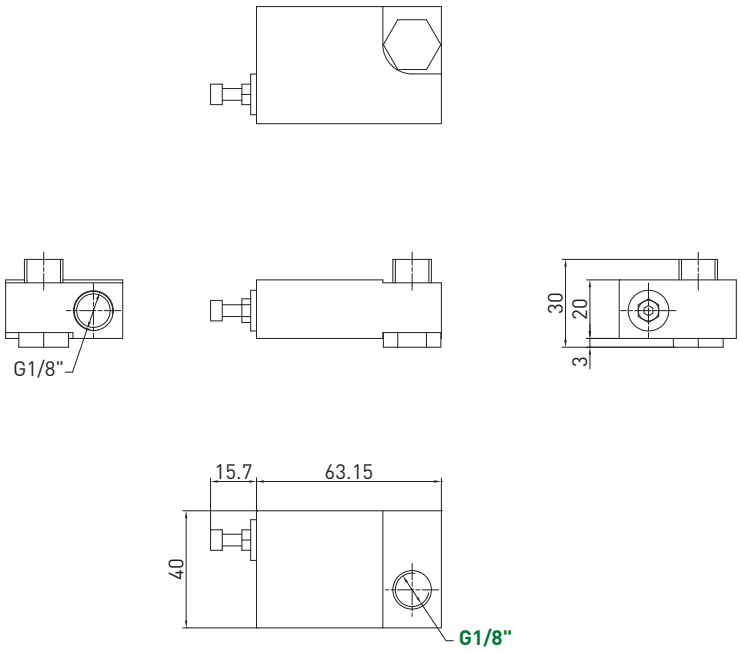

* DIMENSIONAL TOLERANCE
FOR DOWEL HOLES: ±0.02

DIMENSIONAL TOLERANCE
FOR THREADED HOLES: ±0.1

REV. 00 - 20/09/2018

CLAMPING

CS/HES-Series

Sealed clamps

INTERNATIONAL MOUNT

GLOBAL STANDARD COMPONENTS NAAMS

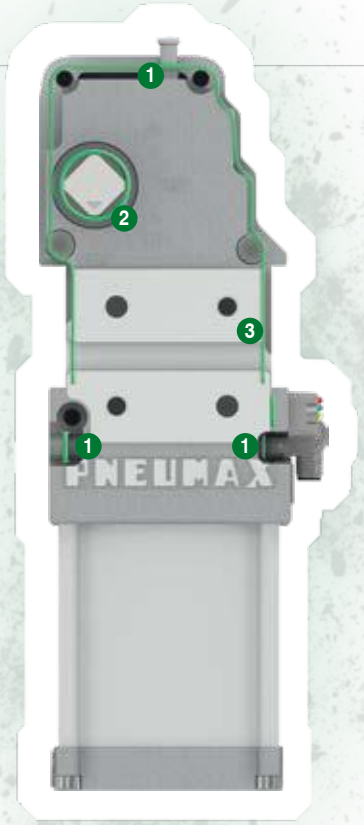

- **Weld-contamination proven**
- **Suitable for laser welding applications**
- **No dimensional change from conventional clamps**

1. The manual unlock button and the adjustment access are sealed with an O-ring
2. The toggle mechanism is fully sealed
3. Acrylic-based Loctite® for full sealing

Ordering string

Sealed clamp

CS	1	P	63	E	G	4	S	01

CS	VERSION	**C** = clamp **CS** = sealwed clamp **HE** = high efficiency clamp **HES** = high efficiency sealed clamp
1	MOUNTING PATTERN	
P	OPERATION	
63	SIZE	
E	SENSOR	
G	PORTS	
4	ARM MOUNT	
S	ARM MATERIAL	
01	CLAMP ARM TYPE	

Follow the ordering string of standard clamps.
For technical specifications please refer to the charts of standard clamps.

Technical information are provided for informative purpose only and can be subject to change without prior notice

CB-Series

Power clamp with double arm

- **Stepless adjustable opening angle**
- **Toggle lock mechanism**
- **Unlock manual override > in case of air loss the clamp can be opened manually**
- **Pneumatic ports on both sides of the cylinder**
- **Extremely compact dimensions**
- **4-sided mounting pattern**

Technical features

Manual release button to open the linkage when air pressure is removed during setup. **Pneumatic ports on both sides** of the cylinder.

Operating features	
Operating pressure	from 2 to 8 bar / from 30 to 115 psi
Lubrication	all the devices are lubricated for life at the factory. Inline air lubrication isn't required

Functional charts

Size 40 mm

- **Tooling weight chart**
  5 bar operating pressure – 135° opening angle
  REV. 00 - 02/12/2019

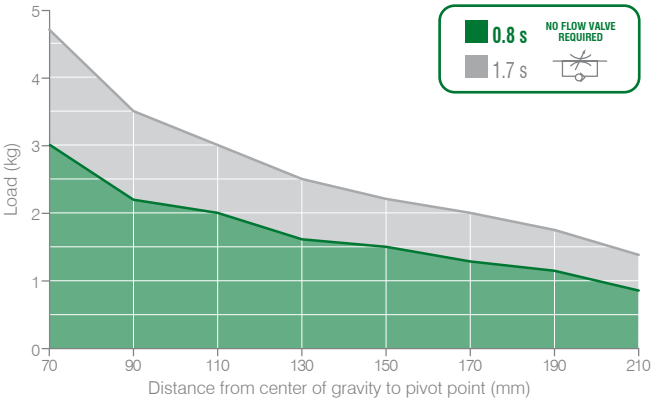

The max allowed load is to be divided on the 2 arms

- **Clamping moment (at 5 bar / 72.5 psi)**
  85 N m / 62,69 lb·ft
- **Cycle time**
  0.8 s at 90°

Size 63 mm

- **Tooling weight chart**
  5 bar operating pressure – 135° opening angle
  REV. 00 - 17/06/2015

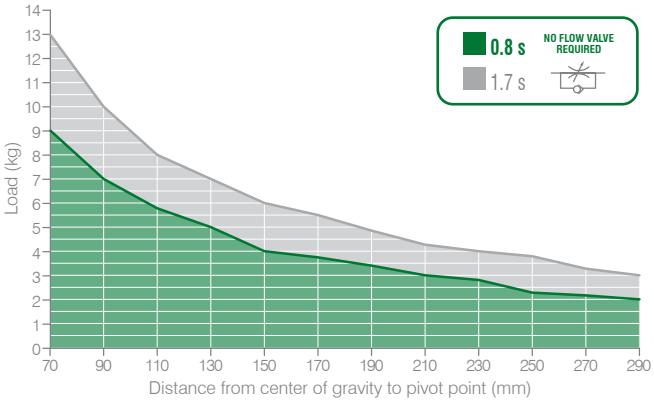

The max allowed load is to be divided on the 2 arms

- **Clamping moment (at 5 bar / 72.5 psi)**
  170 N m / 125,39 lb·ft
- **Cycle time**
  0.8 s at 90°

The above data are meant for correct working conditions of the clamp with the same performance level during its life time.
For applications which exceed the above data, please contact our sales representatives.

CLAMPING

Ordering string

CB-Series

CB	40	E	G	5	A	01

CB	**VERSION**	**CB** = double arm clamp
40	**SIZE**	**40** = Ø 40 mm **63** = Ø 63 mm
E	**SENSOR**	**E** = electronic sensor with M12 swivel connector - PNP
G	**PORTS**	**G** = G thread – BSPP
5	**ARM MOUNT**	**5** = 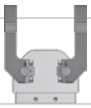 **6** = 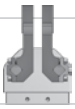
A	**ARM MATERIAL**	**A** = aluminum
01	**CLAMP ARM TYPE**	**01** = wishbone, central, 15 mm offset **02** = wishbone, right, 15 mm offset **03** = wishbone, left, 15 mm offset **61** = wishbone, 10 mm offset specific for CB40 clamp

Stepless adjustment from 13° to 180° for size 40 mm
Stepless adjustment from 8° to 180° for size 63 mm

CB40EG / **Power clamp with double arm** - 40 mm bore

WEIGHT 2.5 kg

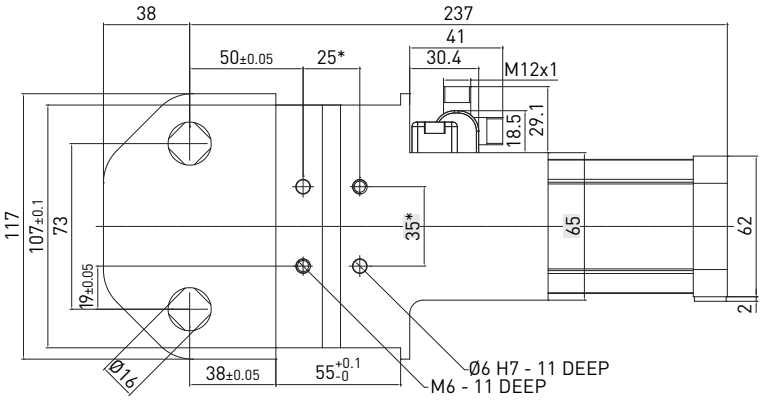

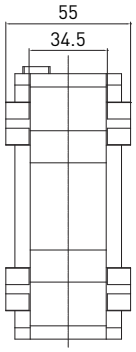

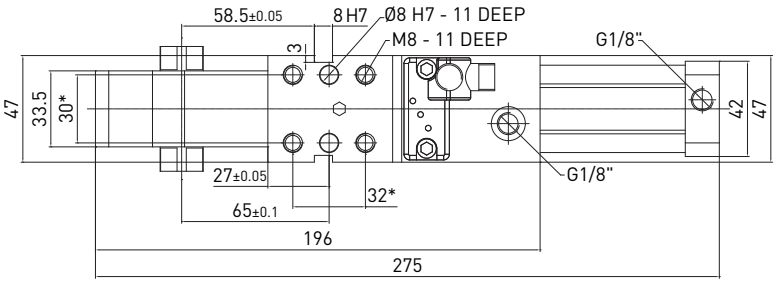

* DIMENSIONAL TOLERANCE FOR DOWEL HOLES: ±0.02

DIMENSIONAL TOLERANCE FOR THREADED HOLES: ±0.1

REV. 00 - 20/09/2018

Technical information are provided for informative purpose only and can be subject to change without prior notice

CLAMPING

Clamping arms / 16 mm shaft

REV. 00 - 31/03/2015

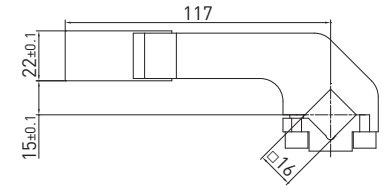

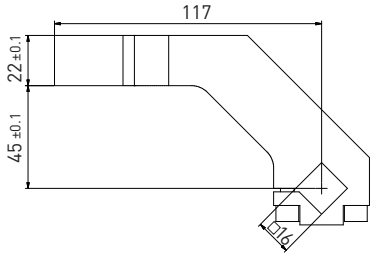

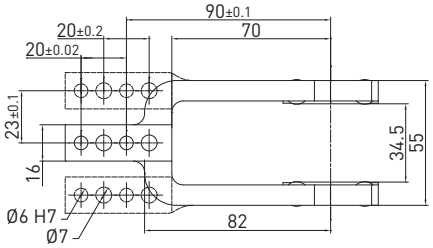

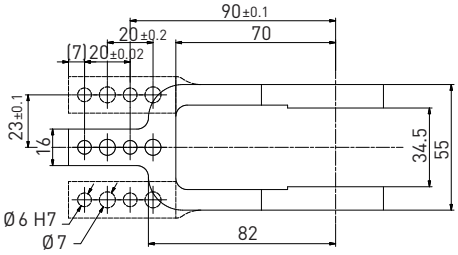

16 mm shaft – 15 mm offset

Part no.	Material	Version	Weight (kg)	Max op. angle pos. 5
B1601	**Aluminum**	**Central**	**0.24**	**90°**
Q1601	**Steel**	**Central**	**0.44**	**90°**
B1602	**Aluminum**	**Right**	**0.24**	**90°**
Q1602	**Steel**	**Right**	**0.46**	**90°**
B1603	**Aluminum**	**Left**	**0.24**	**90°**
Q1603	**Steel**	**Left**	**0.46**	**90°**

Screws: M6x20 **Tightening torque:** 10 N m / 7.37 lb ft

16 mm shaft – 45 mm offset

Part no.	Material	Version	Weight (kg)	Max op. angle pos. 5
B1604	**Aluminum**	**Central**	**0.3**	**90°**
Q1604	**Steel**	**Central**	**0.55**	**90°**
B1605	**Aluminum**	**Right**	**0.3**	**90°**
Q1605	**Steel**	**Right**	**0.57**	**90°**
B1606	**Aluminum**	**Left**	**0.3**	**90°**
Q1606	**Steel**	**Left**	**0.57**	**90°**

Screws: M6x20 **Tightening torque:** 10 N m / 7.37 lb ft

Clamping arms / 16 mm shaft - 10 mm offset - Specific for CB40 clamps

REV. 00 - 24/09/2019

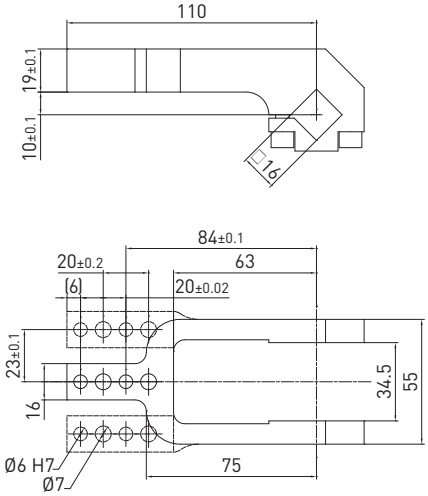

16 mm shaft - 10 mm offset

Part no.	Material	Version	Weight (kg)	Max op. angle pos. 5	Max op. angle pos. 6
B1661	**Aluminum**	**Central**	**0.24**	**90°**	**90°**

Screws: M6x25 **Tightening torque:** 10 N m / 7.37 lb·ft

16 mm shaft - 0 mm offset

Part no.	Material	Version	Weight (kg)	Max op. angle pos. 5	Max op. angle pos. 6
B1618	**Aluminum**	**Central**	**0.22**	**90°**	**90°**

Screws: M6x25 **Tightening torque:** 10 N m / 7.37 lb·ft

WEIGHT 2.5 kg

CB63EG / Power clamp with double arm - 63 mm bore

WEIGHT 6 kg

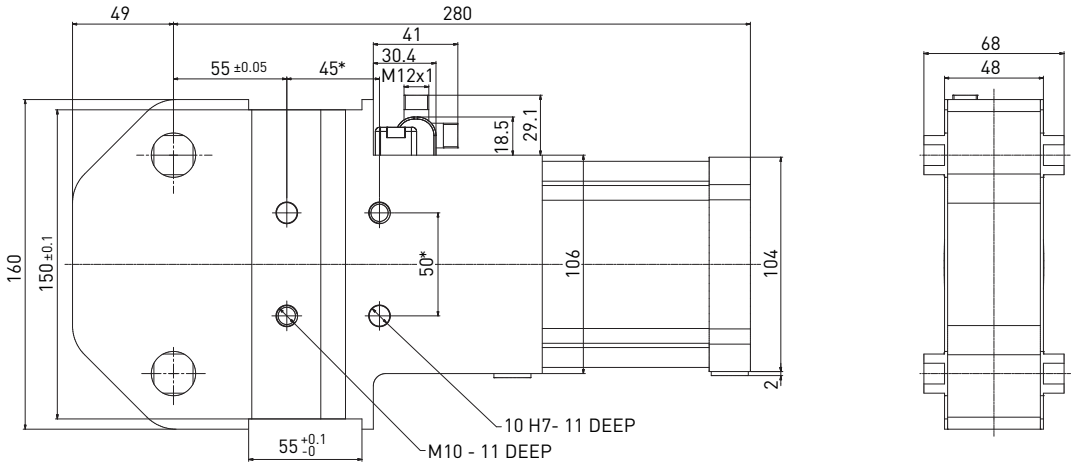

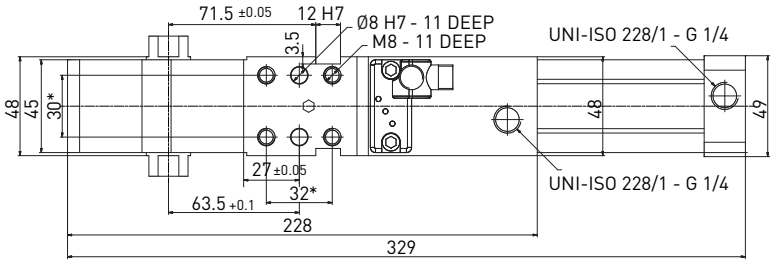

* DIMENSIONAL TOLERANCE FOR DOWEL HOLES: ±0.02

DIMENSIONAL TOLERANCE FOR THREADED HOLES: ±0.1

REV. 00 - 24/09/2019

Technical information are provided for informative purpose only and can be subject to change without prior notice

Clamping arms / 19 mm shaft

REV. 01 - 08/02/2019

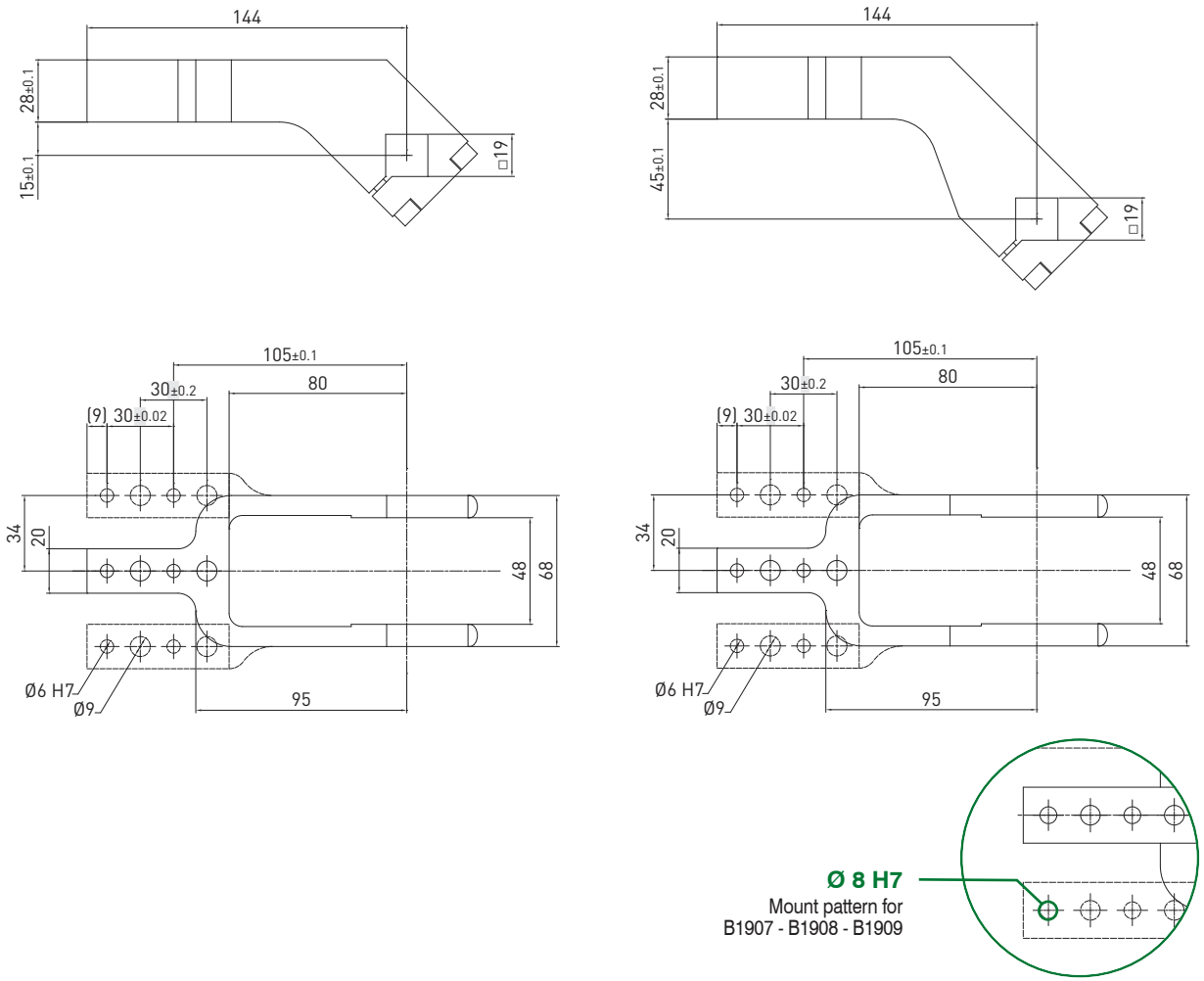

19 mm shaft – 15 mm offset

Part no.	Material	Version	Weight (kg)	Max op. angle pos. 5	Max op. angle pos. 6
B1901	Aluminum	Central	0.41	90°	90°
Q1901	Steel	Central	0.71	90°	90°
B1902	Aluminum	Right	0.43	90°	90°
Q1902	Steel	Right	0.79	90°	90°
B1903	Aluminum	Left	0.43	90°	90°
Q1903	Steel	Left	0.79	90°	90°
B1907	Aluminum	Central	0.41	90°	90°
B1908	Aluminum	Right	0.43	90°	90°
B1909	Aluminum	Left	0.43	90°	90°

Screws: M6x25 **Tightening torque:** 10 N m / 7.37 lb ft

19 mm shaft – 45 mm offset

Part no.	Material	Version	Weight (kg)	Max op. angle pos. 5	Max op. angle pos. 6
B1904	Aluminum	Central	0.45	90°	90°
Q1904	Steel	Central	0.77	90°	90°
B1905	Aluminum	Right	0.46	90°	90°
Q1905	Steel	Right	0.81	90°	90°
B1906	Aluminum	Left	0.46	90°	90°
Q1906	Steel	Left	0.81	90°	90°

Screws: M6x25 **Tightening torque:** 10 N m / 7.37 lb ft

Clamping arms / 19 mm shaft

REV. 01 - 08/02/2019

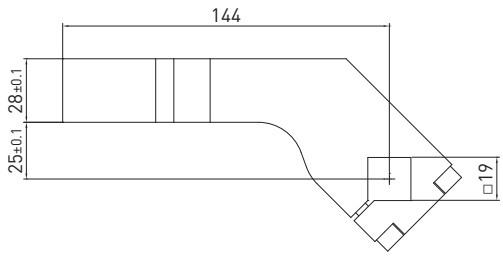

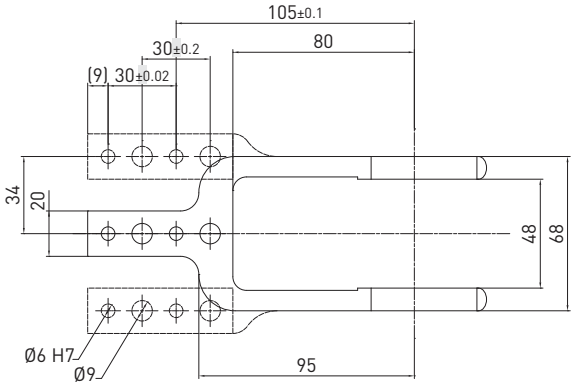

19 mm shaft – 25 mm offset

Part no.	Material	Version	Weight (kg)	Max op. angle pos. 5	Max op. angle pos. 6
B1921	**Aluminum**	**Central**	**0.43**	**90°**	**90°**
B1922	**Aluminum**	**Central**	**0.44**	**90°**	**90°**
B1923	**Aluminum**	**Central**	**0.44**	**90°**	**90°**

Screws: M6x25 **Tightening torque:** 10 N m / 7.37 lb ft

Technical information are provided for informative purpose only and can be subject to change without prior notice

CL-Series

Pneumatic clamp

Extra-light products

550gr
WEIGHT

Miniature light-weight series, enclosed toggle-locking mechanism, compact and light-duty for testing applications, welding and fixture checking.

Technical features

Manual release button to open the linkage when air pressure is removed during setup.

Operating features	
Operating pressure	from 2 to 8 bar / from 30 to 115 psi
Lubrication	all the devices are lubricated for life at the factory. Inline air lubrication isn't required

Functional charts

Size 25 mm

- **Air consumption**
  Air consumption for complete cycle (opening and closing)
  REV. 00 - 17/06/2015

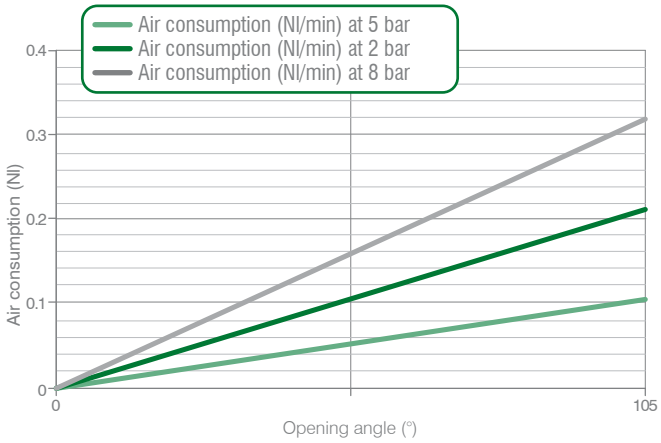

- **Tooling weight chart**
  5 bar operating pressure – 105° opening angle
  REV. 00 - 18/11/2016

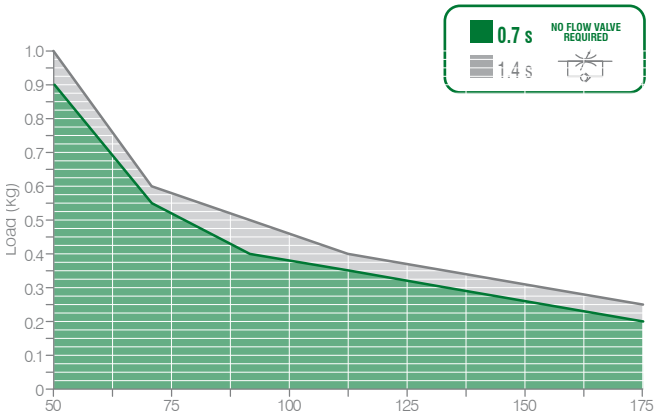

- **Clamping moment (at 5 bar / 72.5 psi)**
  25 N m / 18,43 lb·ft

- **Holding moment**
  50 N m / 36,87 lb·ft

The above data are meant for correct working conditions of the clamp with the same performance level during its life time.
For applications which exceed the above data, please contact our sales representatives.

CLAMPING

CL-Series / Ordering string

CL-Series

C	L	25	E	G	1	A	01

C	VERSION	**C** = clamp
L	SERIES	**L** = light - Weight
25	SIZE	**25** = Ø 25 mm
E	SENSOR	**E** = electronic sensor with M12 swivel connector - PNP **A** = electronic sensor with M12 swivel connector - NPN **N** = no sensor **B** = electronic sensor with M8 swivel connector - PNP
G	PORTS	**G** = G thread – BSPP
1	ARM MOUNT	**1** = **2** = **3** = **4** =
A	ARM MATERIAL	**A** = aluminum
01	CLAMP ARM TYPE	**01** = wishbone, central, 0 mm offset **04** = wishbone, central, 10 mm offset **13** = H, 0 mm offset **14** = H, 10 mm offset

Please see the chartsin the datasheets for arm position as well as for max. opening angle.
NAAMS clamping arms to be ordered separately

CL25EG / Light - weight - pneumatic clamp - size 25 mm

WEIGHT 550 gr

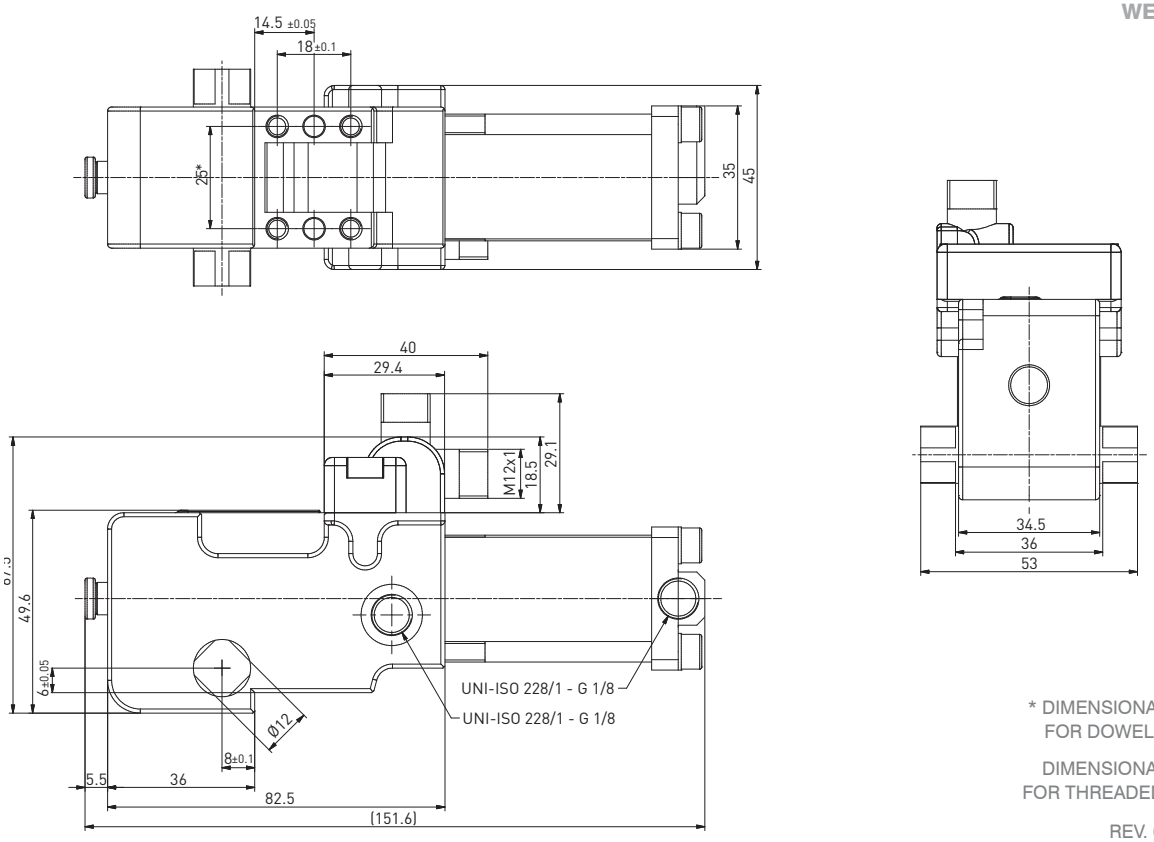

* DIMENSIONAL TOLERANCE FOR DOWEL HOLES: ±0.02

DIMENSIONAL TOLERANCE FOR THREADED HOLES: ±0.1

REV. 00 - 14/06/2021

Technical information are provided for informative purpose only and can be subject to change without prior notice

Clamping arms / 12 mm shaft for clamps' size 25 mm

REV. 02 - 07/10/2015

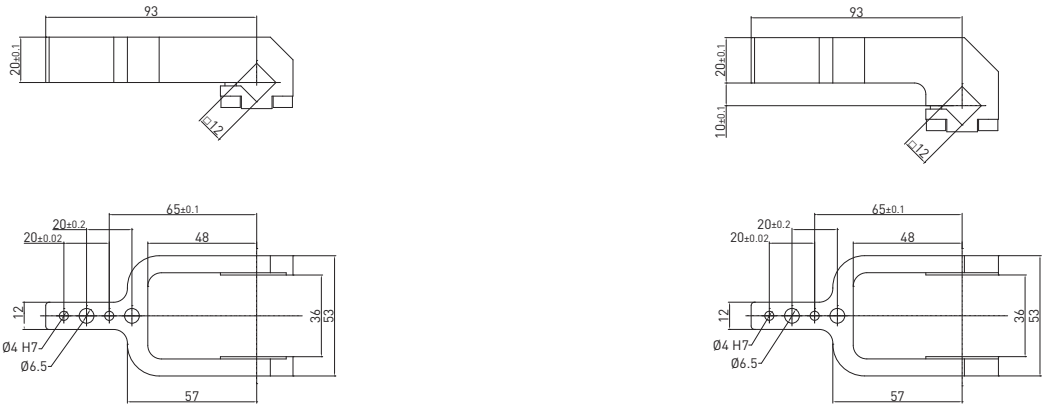

12 mm shaft – 0 mm offset

Part no.	Material	Version	Weight (kg)	Max op. angle pos. 1	Max op. angle pos. 2	Max op. angle pos. 3	Max op. angle pos. 4
B12012	**Aluminum**	**Central**	**0.127**	**135°**	**105°**	**135°**	**90°**

Screws: M5x14 **Tightening torque:** 5 N m / 3.68 lb ft

12 mm shaft – 10 mm offset

Part no.	Material	Version	Weight (kg)	Max op. angle pos. 1	Max op. angle pos. 2	Max op. angle pos. 3	Max op. angle pos. 4
B12042	**Aluminum**	**Central**	**0.135**	**135°**	**120°**	**N/A**	**45°**

Screws: M5x14 **Tightening torque:** 5 N m / 3.68 lb ft

Clamping arms / 12 mm shaft for clamps' size 25 mm and size 32 mm mm - Left & right clamping surfaces

REV. 00 - 12/04/2017

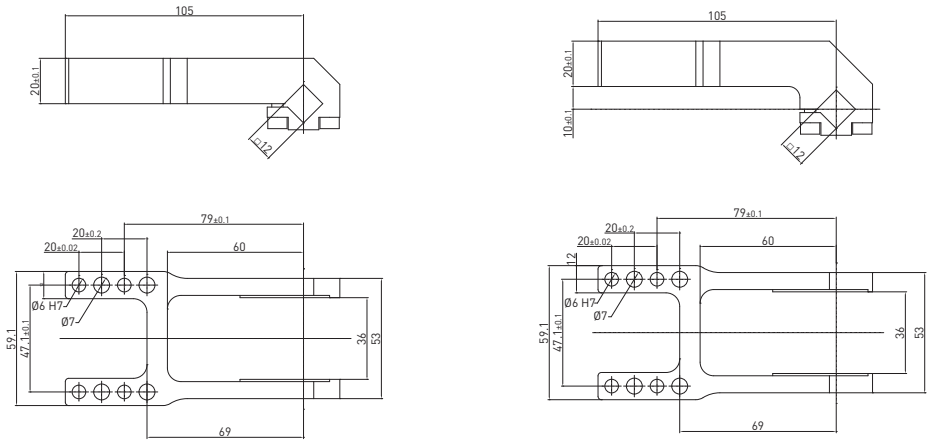

12 mm shaft – 0 mm offset

Part no.	Material	Version	Weight (kg)	Max op. angle pos. 1	Max op. angle pos. 2	Max op. angle pos. 3	Max op. angle pos. 4
B1213	**Aluminum**	**H**	**0.163**	**135°**	**115°**	**N/A**	**45°**

Screws: M5x14 **Tightening torque:** 5 N m / 3.68 lb ft

12 mm shaft – 10 mm offset

Part no.	Material	Version	Weight (kg)	Max op. angle pos. 1	Max op. angle pos. 2	Max op. angle pos. 3	Max op. angle pos. 4
B1214	**Aluminum**	**H**	**0.173**	**135°**	**115°**	**N/A**	**45°**

Screws: M5x14 **Tightening torque:** 5 N m / 3.68 lb ft

HC-Series

Hydraulic clamps

Hydraulic power clamps with **fully-enclosed mechanism**. Maximum mechanical advantage and compact dimensions. Heavy-duty sealed clamps provide superior clamping forces in **harsh welding environments**.
Efficient and consistent for repetitive production operations. Sturdy toggle-linkage mechanism and industry-proven position monitoring: the sensor detects the actual linkage condition. **High performance and maintenance-free bushings**.

Technical features

90° opening angle	
Operating features	
Operating pressure	Nominal pressure 75 bar; max pressure 150 bar
Fluid temperature	-20 °C ÷ + 80°C
Fluid	Hydraulic mineral oil
Weight	5,5 Kg

Functional charts

- **Tooling weight chart**

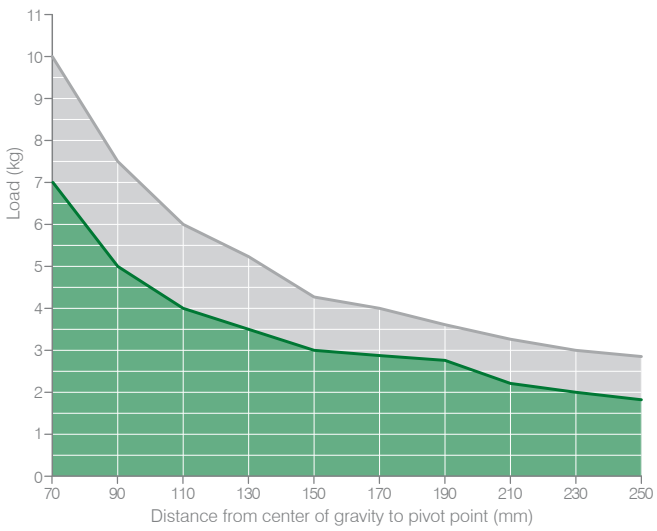

- **Clamping moment**
  580 N m at 75 bar

The above data are meant for correct working conditions of the clamp with the same performance level during its life time. For applications which exceed the above data, please contact our sales representatives.

Make sure that the opening movement is cushioned through flow adjusters.

Technical information are provided for informative purpose only and can be subject to change without prior notice

Ordering string

Hydraulic Power Clamps

HC	1	A	G	1	S	01

HC	**VERSION**	**HC** = hydraulic clamp
1	**SIZE**	**1** = Ø25 mm bore; 19 mm arm shaft
A	**SENSOR**	**E** = electronic sensor with M12 swivel connector - PNP **A** = electronic sensor with M12 swivel connector - NPN **N** = no sensor **B** = electronic sensor with M8 swivel connector - PNP
G	**PORTS**	**G** = G thread – BSPP
1	**ARM MOUNT**	**1** = **2** = **3** = **4** =
S	**ARM MATERIAL**	**S** = steel
01	**CLAMP ARM TYPE**	**01** = wishbone, central, 15 mm offset **02** = wishbone, right, 15 mm offset **03** = wishbone, left, 15 mm offset **04** = wishbone, central, 45 mm offset **05** = wishbone, right, 45 mm offset **06** = wishbone, left, 45 mm offset

HC1 / **International mount** - 25 mm bore

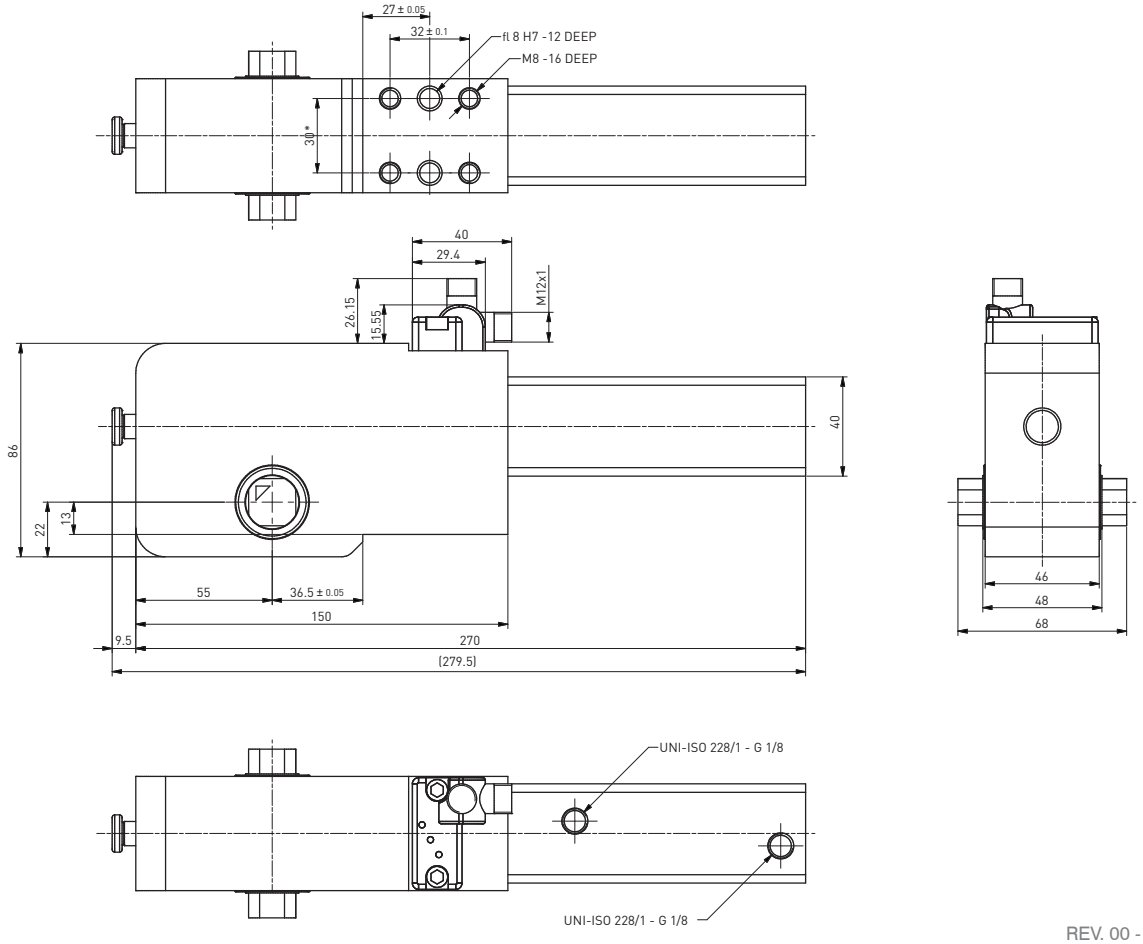

REV. 00 - 15/06/2021

QIG_C_EN Rev.00 09.2015

CLAMPING

Clamping
Quick installation guide

Caution

Any maintenance operation may only be carried out by qualified and authorized personnel. For any reason, do not reach into the pivoting range of the clamping arms, when the clamps are in operation. Disconnect and lock out pneumatic and electric supply lines before operating on or around clamps.

A worksheet for the right sizing of the clamp is available upon request. Visit our website for technical documents

http://automotive.pneumax.it/

Functional description

When operated, the pneumatic cylinder acts on an integrated toggle mechanism, which triggers the pivoting movement of the clamping arms.

Pressure operating range: from 2 to 8 bar/ from 30 to 115 psi. Inline lubrication isn't required: if lubricated air is used, it is necessary to continue using lubricated air, as the oil in it may have removed the basic lubrication in the device.

The clamp is warranted for 3 mln cycles in correct operating conditions

No lubrication.

No preventive maintenance.

External cleaning with non-corrosive detergents is required: cleaning interval depends on the ambient conditions as well as on the frequency of use.

Clamp installation to the tool

The clamp can be installed by one of its four mounting surfaces, using dowels and screws according to its datasheet. The tightening torques to be set are:

M5	5 N m / 3.68 lb·ft
M6	10 N m / 7.37 lb·ft
M8	25 N m / 18.43 lb·ft
M10	35 N m / 25.81 lb·ft
M12	50 N m / 36.87 lb·ft

Use the key support surfaces, where available.
Always use all the bores on the mounting pattern.

Electronic sensor

ES001 is used for all clamps' sizes and series. Adjustment of the connector: unscrew the tightening screw and set the connector in the required position, then secure the screw with 5 N m / 3.68 lb·ft.

Technical features	
Operating voltage	**10-30 VDC**
Voltage drop	**≤ 2 V**
Load current	**≤ 100 mA**
Current consumption	**≤ 30 mA**
Short-circuit protection	**protected**
Protection rating	**IP68**
Operating temperature	**–0 °C +50 °C**
Storage temperature	**–25 °C +60 °C**
Electromagnetic compatibility	**EN 60947-5-2:2007 + A1:2012**
Power supply indication	**green LED**
Open position indication	**yellow LED**
Closed position indication	**red LED**
Digital output type	**PNP**

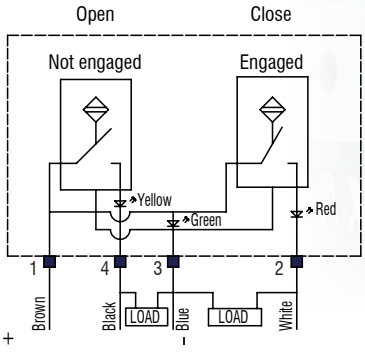

Semplified diagram (PNP)

To replace the sensor, remove the M5 screw and assemble a new one by tightening the same screw with 5 N m / 3.68 lb·ft.

Technical information are provided for informative purpose only and can be subject to change without prior notice

Arm mount options

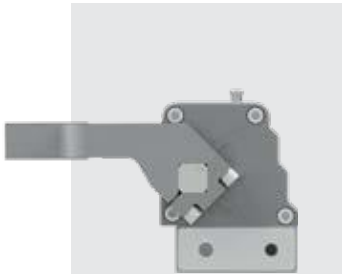

Position 1

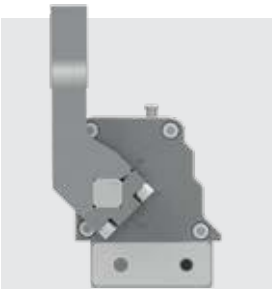

Position 2

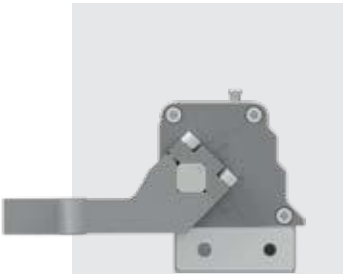

Position 3

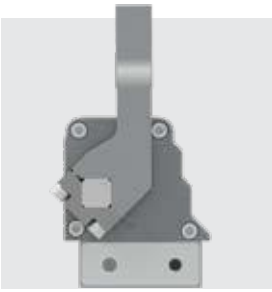

Position 4

The above pictures show the closed position.
The max. opening angle according to the arm mount option is indicated on each clamp arm's datasheet. In order to achieve a right or left arm mount in configurations 2 or 3, the clamping arm should be rotated by 180°, therefore to achieve

C1P/HE1P___ 2A03 a right clamp arm is required, i.e. B/Q _ _02
C1P/HE1P___ 2A02 a left clamp arm is required, i.e. B/Q _ _03
C1P/HE1P___ 2A05 a right clamp arm is required, i.e. B/Q_ _06
C1P/HE1P___ 2A06 a left clamp arm is required, i.e. B/Q_ _05

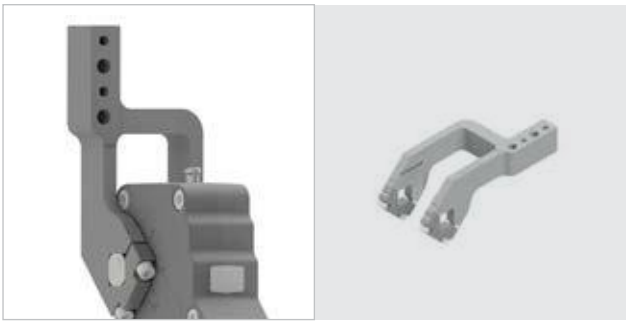

C1_ _ _ _2A03 using a right **_ _02 arm**

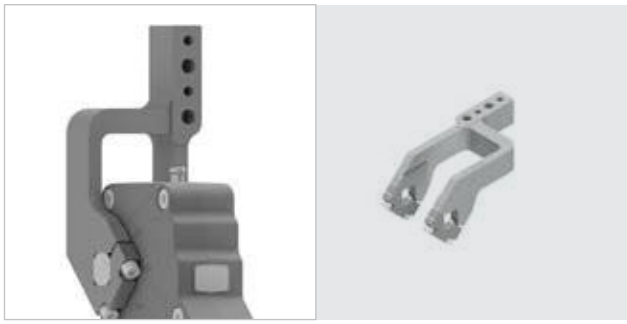

C1_ _ _ _2A02 using a left **_ _03 arm**

Clamping arm mount

The sides of the brackets have two different heights. Assemble the brackets to the side of the clamping arm, so that the surfaces, where the side mark has been machined on, will match. Secure, at first, the screw on the mark side 1 by setting the tightening torques indicated on the clamping arm datasheet, and leave no gap between the bracket and the arm. Then, secure the other screw 2: in this case, due to the different length of the sides of the brackets, a gap between the same and the clamping arm will be noticed. Always use locking washers.

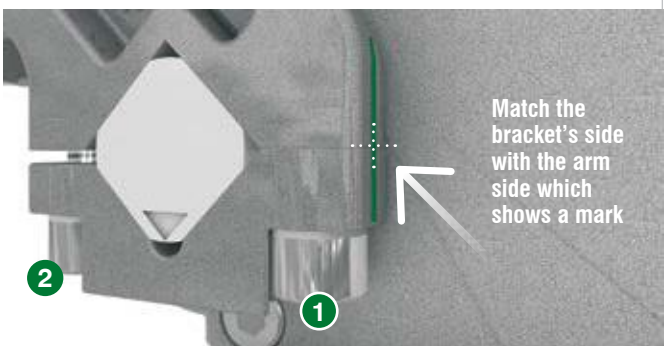

Handles with knobs for manual levers

RK7100/0015 Handle with green knob and bracket; D2 version for 25 and 32 mm bore clamps and manual pin packages RD250 and FD63

RK7100/0005 Handle with green knob and bracket; D1 version for 40 mm bore clamps

RK7100/0006 Handle with green knob and bracket; D2 version for 40 mm bore clamps

RK7100/0003 Handle with green knob and bracket; D1 version for 50 and 63 mm bore clamps

RK7100/0004 Handle with green knob and bracket; D2 version for 50 and 63 mm bore clamps

RK7100/0007 Handle with green knob and bracket; D2 version for 80 mm bore clamps

The levers' kits include handle knob, bracket and M5 x 16 screws. Tightening torque: 5 N m/ 3.68 lb·ft.
The handles can be installed on the left or on the right side of the clamps- all manual clamps show a dual output shaft.

Opening angle adjustment

The clamping arm must be in the open position. Insert a 5 mm hexagonal flat Allen Wrench or a screw gun and adjust the opening position to the required opening angle.

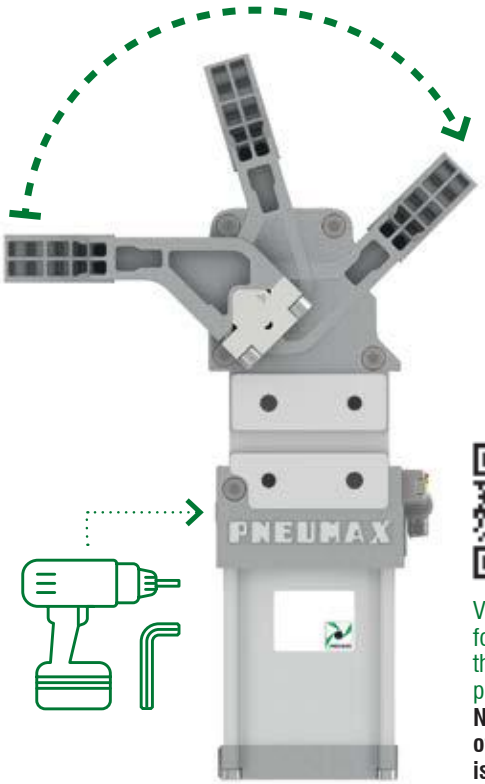

Visit our website for a video of the adjustment procedure.
No adjustment of the sensor is required.

Manual release button

To manually unlock the mechanism, hit the bolt with a rubber mallet. The linkage will automatically release itself from the over-centre position. To close the clamps during set-up operations, without air, use a screw gun or a flat Allen wrench to engage the adjustment means and adjust the clamp till 0° opening angle: the linkage will be toggle-locked as the manual release button is completely outside.

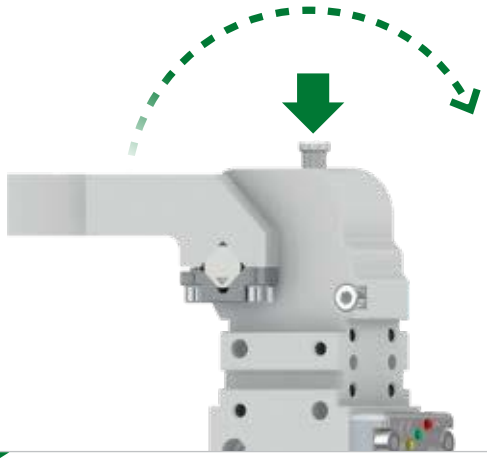

No need to disassemble the cylinder to rotate the ports' position

Supply-ports on both sides of the cylinder for a simpler set-up.

Auto-retaining device

For mounting installations, where the load is subject to gravity force and could move from the clamp opening position, an auto-retaining device could be used. Please refer to our website for the respective documentation, under the accessories section. AR- series.

Shims and spacers

For an optimal setting of the clamping force, proceed as follows: place the NC blocks until contact is made with the workpiece, close the clamp and verify that the linkage is toggle-locked by checking that the release bolt is completely outside. Proceed by adding shims or spacers till the gap between the workpiece and the NC block is 0 mm, then add further shims so that the required clamping force is achieved. 0.3 mm shimming is the average interference recommended: please consider that the thickness of the shim to be chosen depends on the air pressure as well as on the clamping arm's length and clamp size. For any specific requirement, please contact our technical representatives at *automotive@pneumaxspa.com*.

Technical information are provided for informative purpose only and can be subject to change without prior notice

Locating

High locating accuracy.
High protection against welding debris and corrosion.

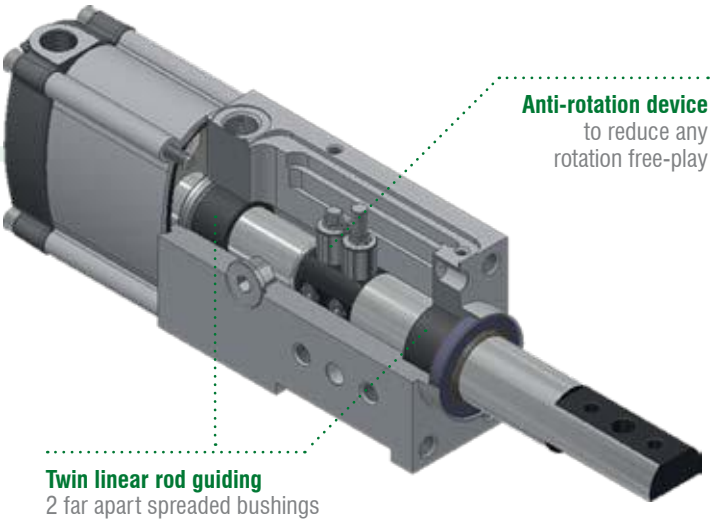

Extra-light products

RP50 RP63 RM50 HP50 RD50 RT40 RTD40 RCD250 RC50 RC63 FP40 FP63 FT50 FTD50 RP32 RA32

CNOMO

High positioning accuracy level

Precise guiding through 2 far-apart spreaded bushings for an optimal support of the rods > twin piston rod guide

- **Low deflection**
- **Efficient anti rotation mechanism**

Long life built-in components in rust prevention

- **No weld covers or bellows required**
- **Steel and brass rod scraper to prevent welding debris from entering the pin package**
- **Chrome rod coating as a protection against adhering weld sparks**

High resistance to welding debris and corrosion

Anti-rotation system to reduce any rotation free-play

Locating products

Dual rods

- **Extra-light products**
- **Short body length**
- **Clear design with user-friendly surfaces and no dirt or welding deposit traps**

Nano pin packages

2-sided mounting option

Front mount

Rear mount

Supply ports on 3 sides

G ports on 3 sides

High performance pin package

The heat generated from any welding process can cause a localized deformation in the workpiece when the metal cools, some parts could contract more than others, leaving residual stress.
To improve the process reliability, a higher level of pull force to disengage the pin can be required to overcome the tensions in the workpiece.

Pull force: 1960N

Cnomo

Pin packages according to Cnomo standard also available with manual operation.

CNOMO

Technical information are provided for informative purpose only and can be subject to change without prior notice

Retractable locating pin packages with toggle linkage

- Fully encapsulated toggle mechanism: in case of air loss, the working position remains secure
- Clear design with user-friendly surfaces

Retractable locating pin packages with dual rods and toggle linkage

- Fully encapsulated toggle mechanism: in case of air loss, the working position remains secure
- Clear design with user-friendly surfaces and no dirt or welding deposit traps

Retractable locating pin packages with toggle linkage and manual operation

- Manual unlock mechanism to disengage the linkage in emergency situations

Retractable locating pin packages with dual rods, toggle linkage and manual operation

- Manual unlock mechanism to disengage the linkage in emergency situations

R-Series

Retractable locating pin packages

Technical features

Pneumatic ports on both sides of the cylinder.

Operating features	
Operating pressure	from 2 to 8 bar / from 30 to 115 psi
Lubrication	all the devices are lubricated for life at the factory. Inline air lubrication isn't required

LOCATING

Functional charts

Size 50 mm

- **Max deflection**

Stroke	Load (kg)	Load position A deviation (mm)	Load position B deviation (mm)	Load position C deviation (mm)
60 mm	0.5	0.007	0.012	0.01
	1	0.013	0.025	0.023
	1.5	0.02	0.04	0.036
	2	0.03	0.053	0.049
	2.5	0.038	0.067	0.064
	3	0.045	0.082	0.075
50 mm	0.5	0.006	0.009	0.007
	1	0.013	0.02	0.018
	1.5	0.021	0.032	0.028
	2	0.026	0.047	0.043
	2.5	0.032	0.66	0.057
	3	0.037	0.075	0.068
40 mm	0.5	0.004	0.009	0.004
	1	0.009	0.02	0.009
	1.5	0.013	0.032	0.013
	2	0.018	0.047	0.018
	2.5	0.022	0.66	0.022
	3	0.026	0.075	0.026
25 mm	0.5	0	0.005	0
	1	0.005	0.015	0.005
	1.5	0.007	0.032	0.007
	2	0.011	0.047	0.011
	2.5	0.012	0.66	0.012
	3	0.014	0.075	0.014
15 mm	0.5	0	0.005	0
	1	0.002	0.018	0
	1.5	0.004	0.025	0.002
	2	0.007	0.033	0.006
	2.5	0.012	0.043	0.009
	3	0.014	0.052	0.013

- **Functional data (at 5 bar / 72.5 psi)**

Thrust force	**825 N**
Pull force	**980 N**
Max bending moment	**3 N m / 2.21 lb·ft**
Max distance from the load centre to the rod	**200 mm**

- **Cycle time for max stroke**
  < 0.8 s NO flow valve required

- **Air consumption**
  Air consumption for complete cycle
  REV. 00 - 18/06/2015

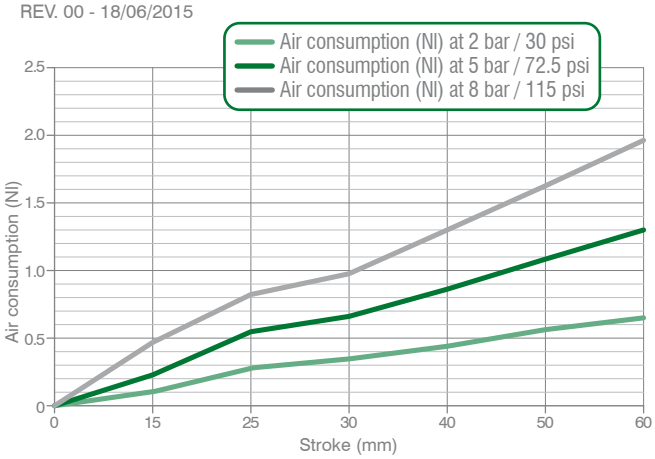

Load position A	Load position B	Load position C
Horizontal mounting position of the retractable locating pin/load centre on the rod	Horizontal mounting position of the retractable locating pin/load centre at 100 mm from the rod axis	Vertical mounting position of the retractable locating pin/load centre at 100 mm from the rod axis

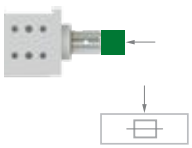

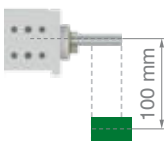

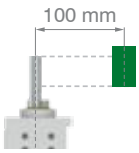

Technical information are provided for informative purpose only and can be subject to change without prior notice

Size 63 mm

• Max deflection

Stroke	Load (kg)	Load position A deviation (mm)	Load position B deviation (mm)	Load position C deviation (mm)
60 mm	0.5	0.007	0.012	0.01
	1	0.013	0.025	0.023
	1.5	0.02	0.04	0.036
	2	0.03	0.053	0.049
	2.5	0.038	0.067	0.064
	3	0.045	0.082	0.075
50 mm	0.5	0.006	0.009	0.007
	1	0.013	0.02	0.018
	1.5	0.021	0.032	0.028
	2	0.026	0.047	0.043
	2.5	0.032	0.66	0.057
	3	0.037	0.075	0.068
40 mm	0.5	0.004	0.009	0.004
	1	0.009	0.02	0.009
	1.5	0.013	0.032	0.013
	2	0.018	0.047	0.018
	2.5	0.022	0.66	0.022
	3	0.026	0.075	0.026
25 mm	0.5	0	0.005	0
	1	0.005	0.015	0.005
	1.5	0.007	0.032	0.007
	2	0.011	0.047	0.011
	2.5	0.012	0.66	0.012
	3	0.014	0.075	0.014
15 mm	0.5	0	0.005	0
	1	0.002	0.018	0
	1.5	0.004	0.025	0.002
	2	0.007	0.033	0.006
	2.5	0.012	0.043	0.009
	3	0.014	0.052	0.013

• Functional data (at 5 bar / 72.5 psi)

Thrust force	1,400 N
Pull force	1,555 N
Max bending moment	3 N m / 2.21 lb·ft
Max distance from the load centre to the rod	200 mm

• Cycle time for max stroke

< 0.8 s NO flow valve required

• Air consumption

Air consumption for complete cycle

REV. 00 - 31/03/2015

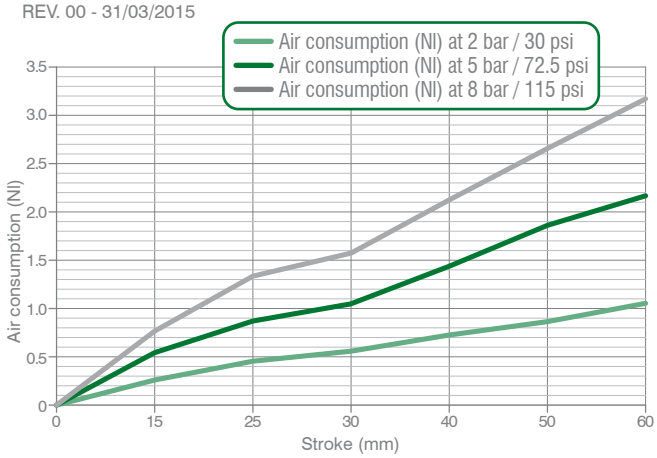

Load position A	Load position B	Load position C
Horizontal mounting position of the retractable locating pin/load centre on the rod	Horizontal mounting position of the retractable locating pin/load centre at 100 mm from the rod axis	Vertical mounting position of the retractable locating pin/load centre at 100 mm from the rod axis

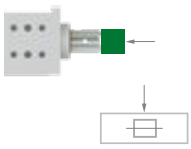

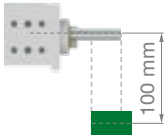

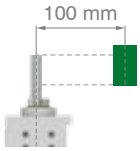

Please get in touch with our technical representatives for any application which exceeds the above values, to find the appropriate solution for your application.

LOCATING

R-Series / Ordering string

R_32-series

R	P	32	E	20	G	2

R	**VERSION**	**R** = retractable locating pin package
P	**OPERATION**	**P** = pneumatic – sensor mounted on the end cap **A** = pneumatic – sensor mounted on the front side
32	**SIZE**	**32** = Ø 32 mm
E	**SENSOR**	**E** = electronic sensor with M12 swivel connector - PNP **A** = electronic sensor with M12 swivel connector - NPN **N** = no sensor **B** = electronic sensor with M8 swivel connector - PNP
20	**STROKE**	**20** = 20 mm **40** = 40 mm
G	**PORTS**	**G** = G thread – BSPP
2	**ROD TERMINATION**	**1** = iØ 16 mm cross-cut key rod termination **2** = iØ 10 mm cross-cut key rod termination

Rod 1

Rod 2

Technical information are provided for informative purpose only and can be subject to change without prior notice

R_50/63-series

R	P	50	E	40	G	3	1

R	**VERSION**	**R** = retractable locating pin package
P	**OPERATION**	**P** = pneumatic **D2** = pneumatic with manual operation (available in size 50)
50	**SIZE**	**50** = Ø 50 mm **63** = Ø 63 mm
E	**SENSOR**	**E** = electronic sensor with M12 swivel connector - PNP **A** = electronic sensor with M12 swivel connector - NPN **N** = no sensor **B** = electronic sensor with M8 swivel connector - PNP
40	**STROKE**	**15** = 15 mm **25** = 25 mm **40** = 40 mm **50** = 50 mm **60** = 60 mm
G	**PORTS**	**G** = G thread – BSPP
3	**ROD TERMINATION**	**1** = iØ 16 mm cross-cut key rod termination **2** = iØ 10 mm cross-cut key rod termination **3** = rod termination for offset pins **4** = rod termination with key **5** = rod with flat termination dia. 10 mm **6** = rod with flat termination dia. 12 mm **7** = iØ 12 mm CNOMO termination **8** = iØ 20 mm CNOMO termination

Rod 1 **Rod 2** **Rod 3** **Rod 4** **Rod 5** **Rod 6** **Rod 7** **Rod 8**

1	**ROD ORIENTATION (for termination type 3)**	**1** = **2** = **3** = **4** =

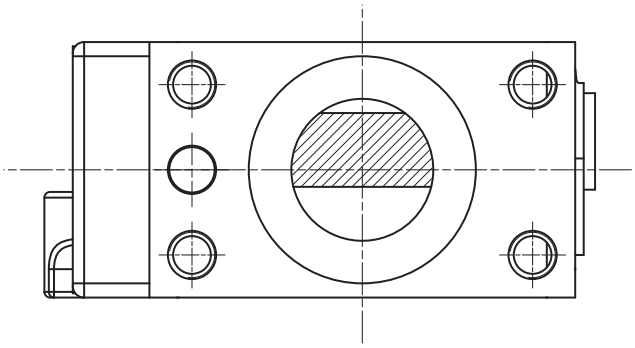

LOCATING

RM250-series

R | M2 | 50 | E | 15 | 3 | 1

R	**VERSION**	**R** = retractable locating pin package
M2	**OPERATION**	**M2** = manual operation - handle included
50	**SIZE**	**50** = body corresponding to size 50
E	**SENSOR**	**E** = electronic sensor with M12 swivel connector - PNP **A** = electronic sensor with M12 swivel connector - NPN **N** = no sensor **B** = electronic sensor with M8 swivel connector - PNP
15	**STROKE**	**15** = 15 mm **25** = 25 mm **40** = 40 mm **50** = 50 mm **60** = 60 mm
3	**ROD TERMINATION**	**1** = iØ 16 mm cross-cut key rod termination **2** = iØ 10 mm cross-cut key rod termination **3** = rod termination for offset pins **4** = rod termination with key **5** = rod with flat termination dia. 10 mm **6** = rod with flat termination dia. 12 mm **7** = iØ 12 mm CNOMO termination **8** = iØ 20 mm CNOMO termination

Rod 1 **Rod 2** **Rod 3** **Rod 4** **Rod 5** **Rod 6** **Rod 7** **Rod 8**

1 **ROD ORIENTATION (for termination type 3)**

1 = **2** = **3** = **4** =

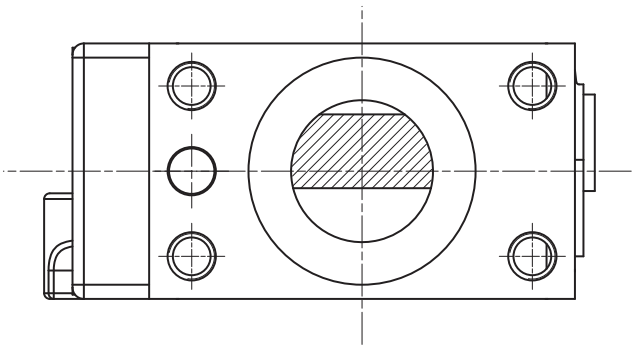

Technical information are provided for informative purpose only and can be subject to change without prior notice

RP32E _1 / **Retractable locating pin package** - Size 32 mm - iØ 16 mm cross-cut key rod termination

WEIGHT 0.88 kg
min. stroke version

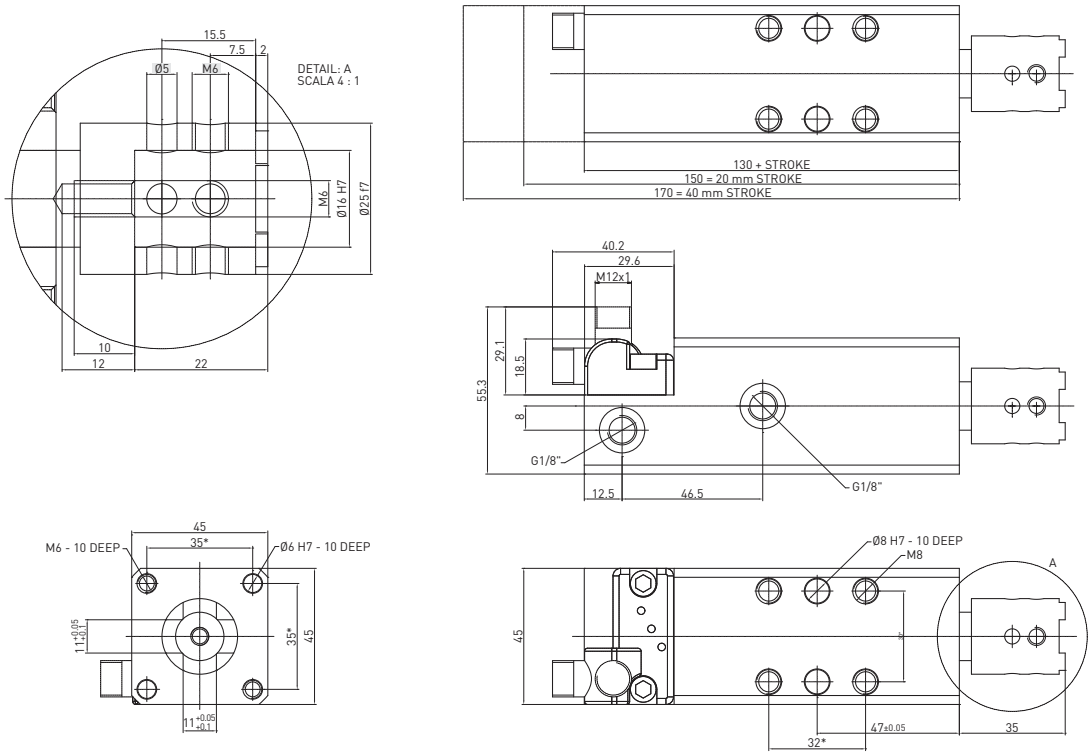

* DIMENSIONAL TOLERANCE FOR DOWEL HOLES: ±0.02

DIMENSIONAL TOLERANCE FOR THREADED HOLES: ±0.1

REV. 00 - 07/03/2017

RP32E _2 / **Retractable locating pin package** - Size 32 mm - iØ 10 mm cross-cut key rod termination

WEIGHT 0.88 kg
min. stroke version

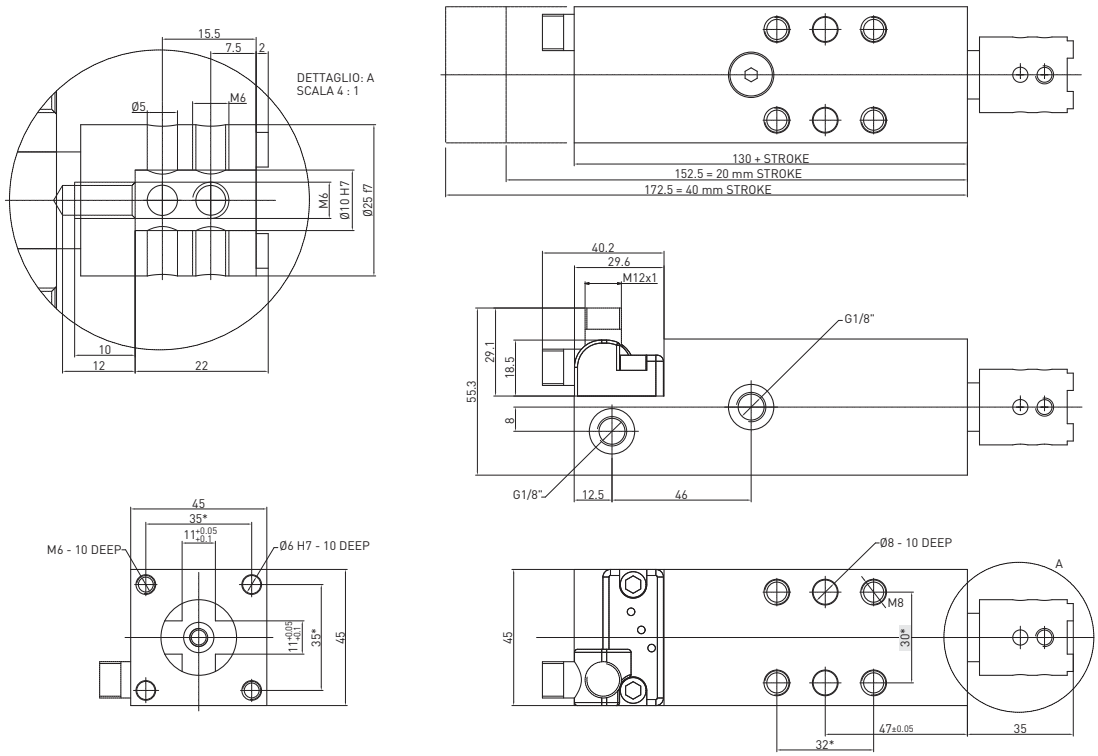

* DIMENSIONAL TOLERANCE FOR DOWEL HOLES: ±0.02

DIMENSIONAL TOLERANCE FOR THREADED HOLES: ±0.1

REV. 00 - 00/00/0000

LOCATING

RA32E _1 / **Retractable locating pin package** - Size 32 mm - iØ 16 mm cross-cut key rod termination

WEIGHT 0.94 kg
min. stroke version

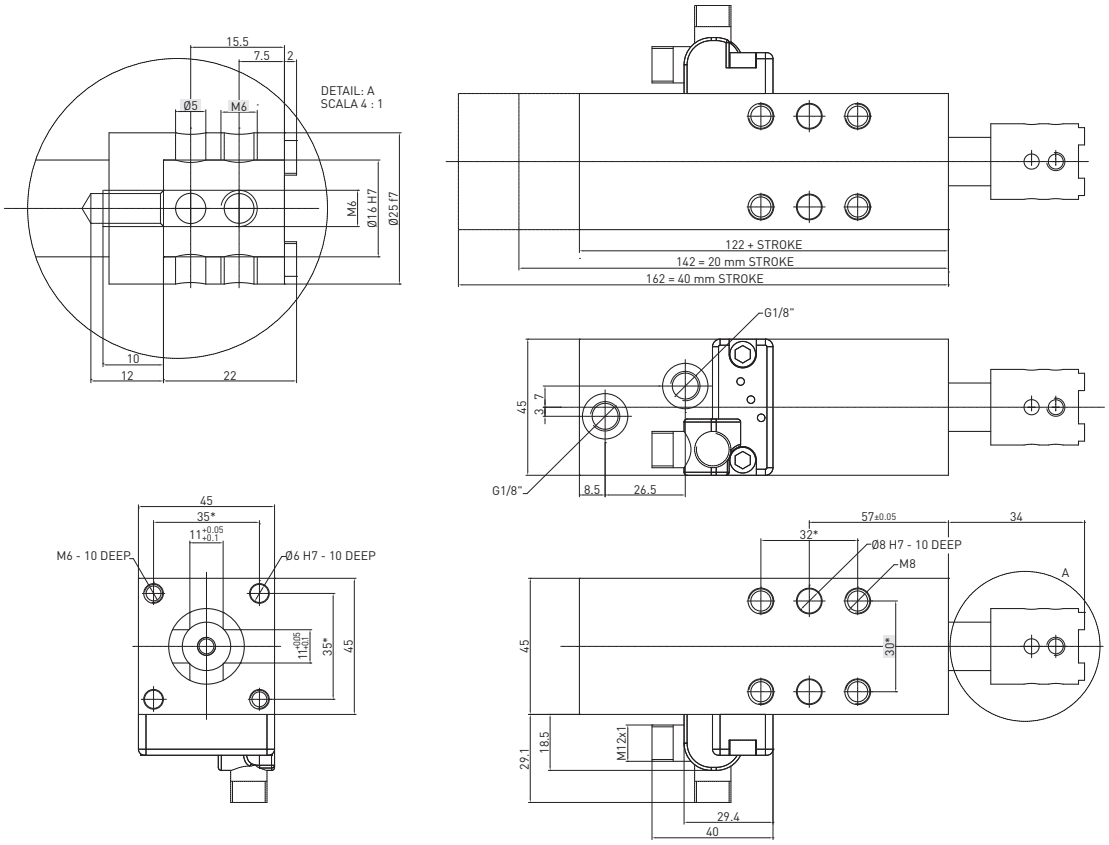

* DIMENSIONAL TOLERANCE FOR DOWEL HOLES: ±0.02

DIMENSIONAL TOLERANCE FOR THREADED HOLES: ±0.1

REV. 02 - 12/01/2018

RA32E _2 / **Retractable locating pin package** - Size 32 mm - iØ 10 mm cross-cut key rod termination

WEIGHT 0.94 kg
min. stroke version

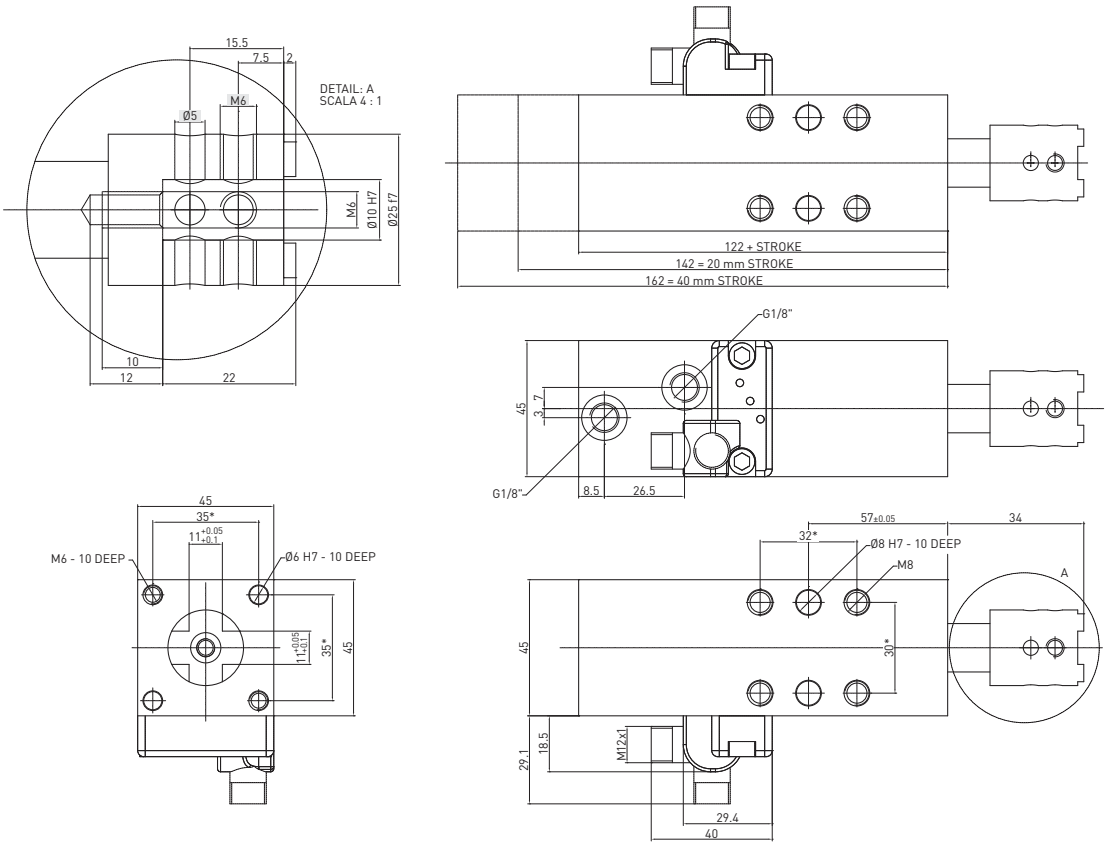

* DIMENSIONAL TOLERANCE FOR DOWEL HOLES: ±0.02

DIMENSIONAL TOLERANCE FOR THREADED HOLES: ±0.1

REV. 02 - 12/01/2018

Technical information are provided for informative purpose only and can be subject to change without prior notice

RP50E _1 / **Retractable locating pin package** - Size 50 mm - iØ 16 mm cross-cut key rod termination

WEIGHT 1.85 kg
min. stroke version

WEIGHT 2.1 kg
max. stroke version

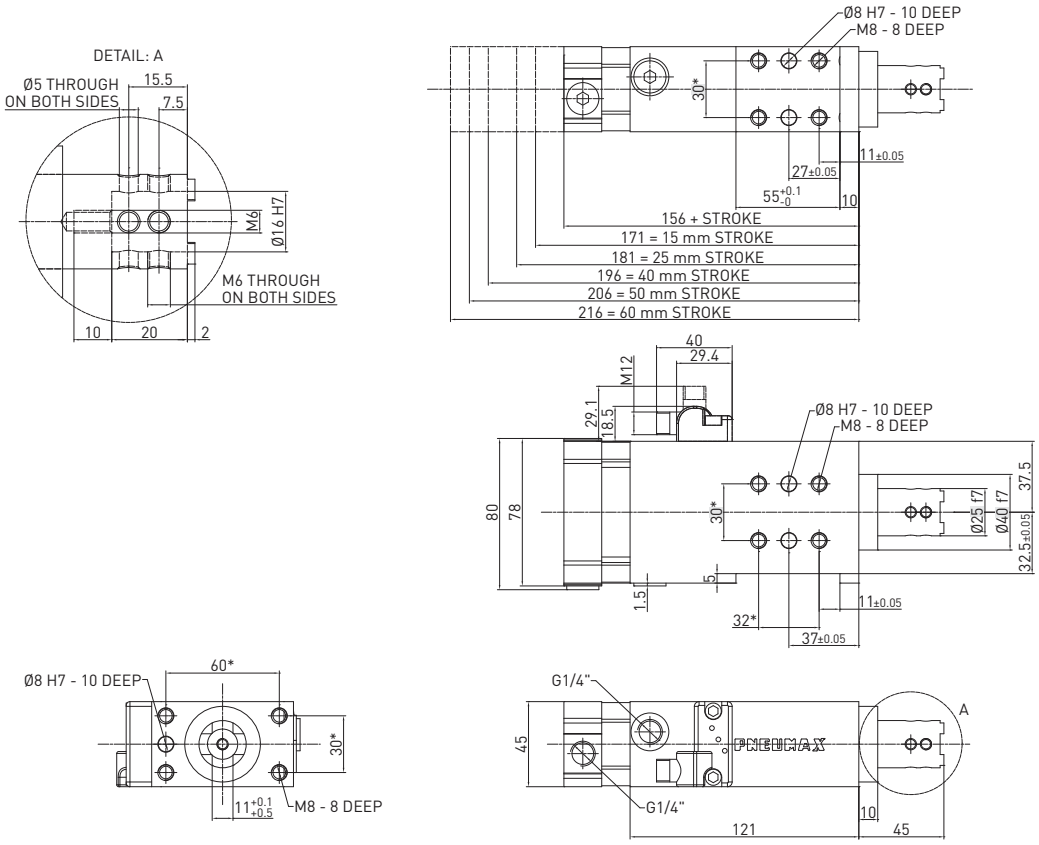

* DIMENSIONAL TOLERANCE FOR DOWEL HOLES: ±0.02

DIMENSIONAL TOLERANCE FOR THREADED HOLES: ±0.1

REV. 01 - 26/02/2016

RP50E _2 / **Retractable locating pin package** - Size 50 mm - iØ 10 mm cross-cut key rod termination

WEIGHT 1.85 kg
min. stroke version

WEIGHT 2.1 kg
max. stroke version

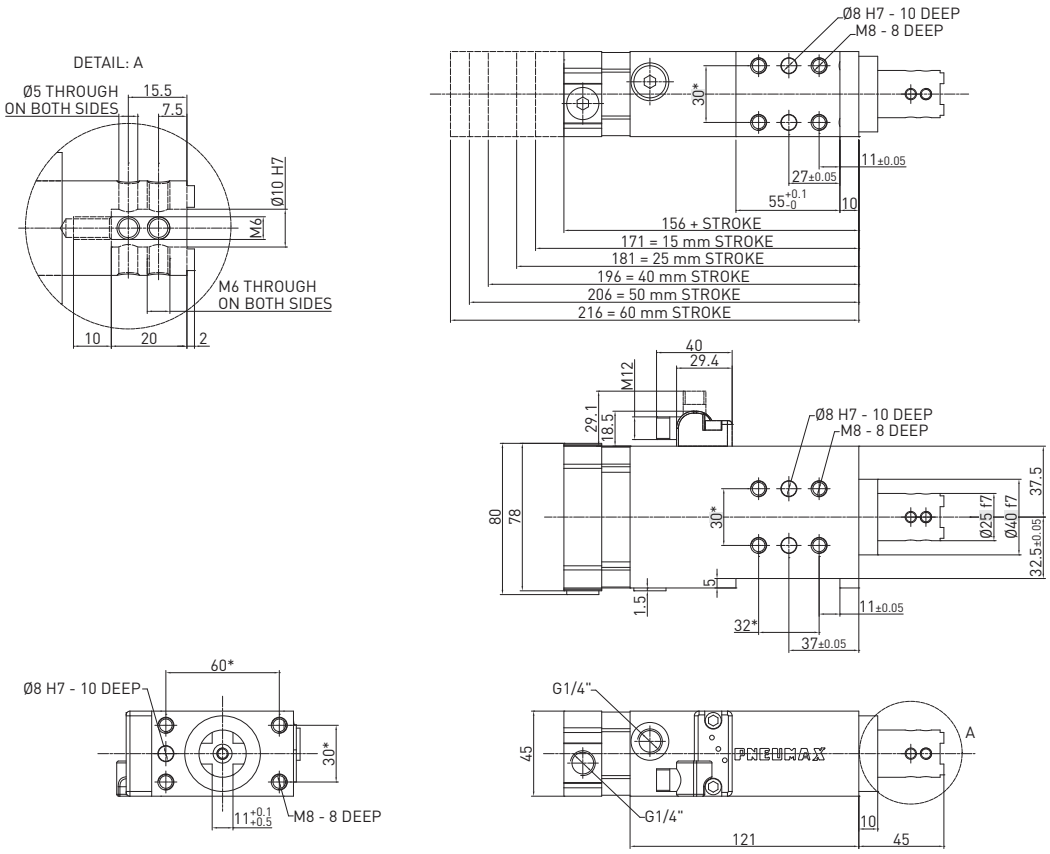

* DIMENSIONAL TOLERANCE FOR DOWEL HOLES: ±0.02

DIMENSIONAL TOLERANCE FOR THREADED HOLES: ±0.1

REV. 01 - 26/02/2016

LOCATING

RP50E _3 / Retractable locating pin package - Size 50 mm - Rod termination for offset pins

WEIGHT 1.85 kg
min. stroke version

WEIGHT 2.1 kg
max. stroke version

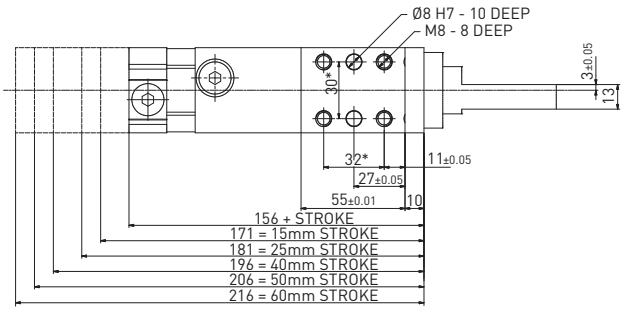

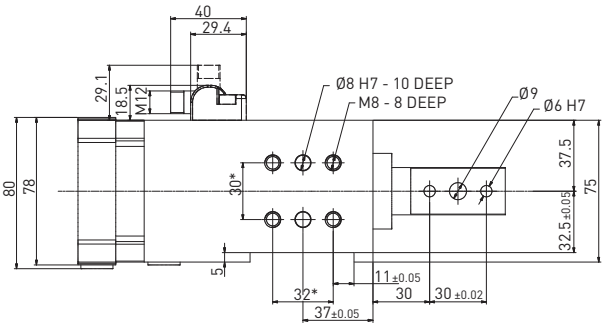

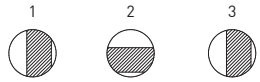

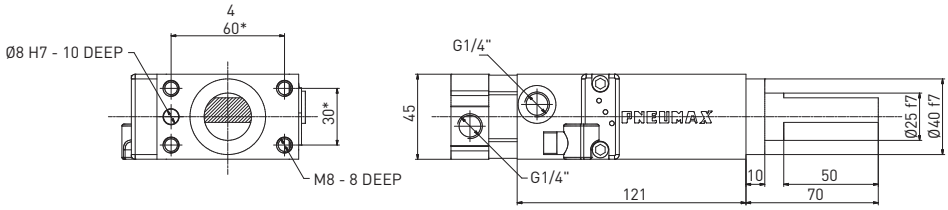

* DIMENSIONAL TOLERANCE FOR DOWEL HOLES: ±0.02

DIMENSIONAL TOLERANCE FOR THREADED HOLES: ±0.1

REV. 00 - 03/04/2015

RP50E _4 / Retractable locating pin package - Size 50 mm - Rod termination with key

WEIGHT 1.85 kg
min. stroke version

WEIGHT 2.1 kg
max. stroke version

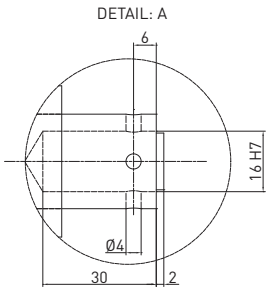

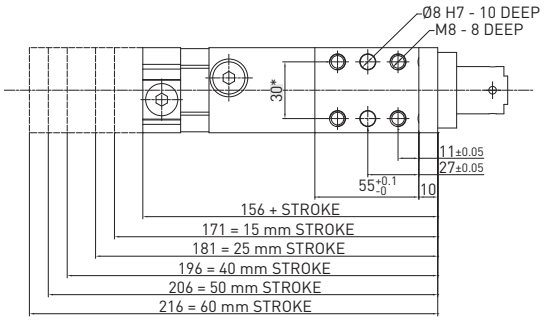

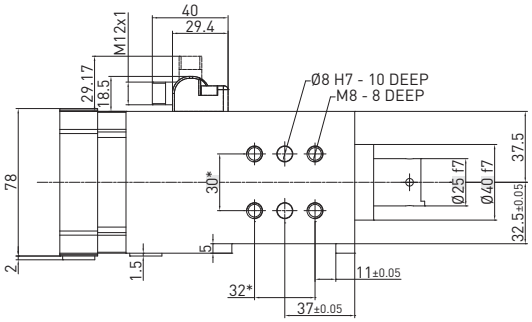

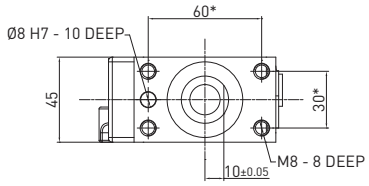

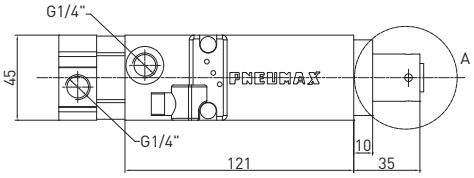

* DIMENSIONAL TOLERANCE FOR DOWEL HOLES: ±0.02

DIMENSIONAL TOLERANCE FOR THREADED HOLES: ±0.1

REV. 02 - 31/03/2015

Technical information are provided for informative purpose only and can be subject to change without prior notice

RP50E _5 / Retractable locating pin package - Size 50 mm - iØ 10 mm flat termination

WEIGHT 1.85 kg
min. stroke version

WEIGHT 2.1 kg
max. stroke version

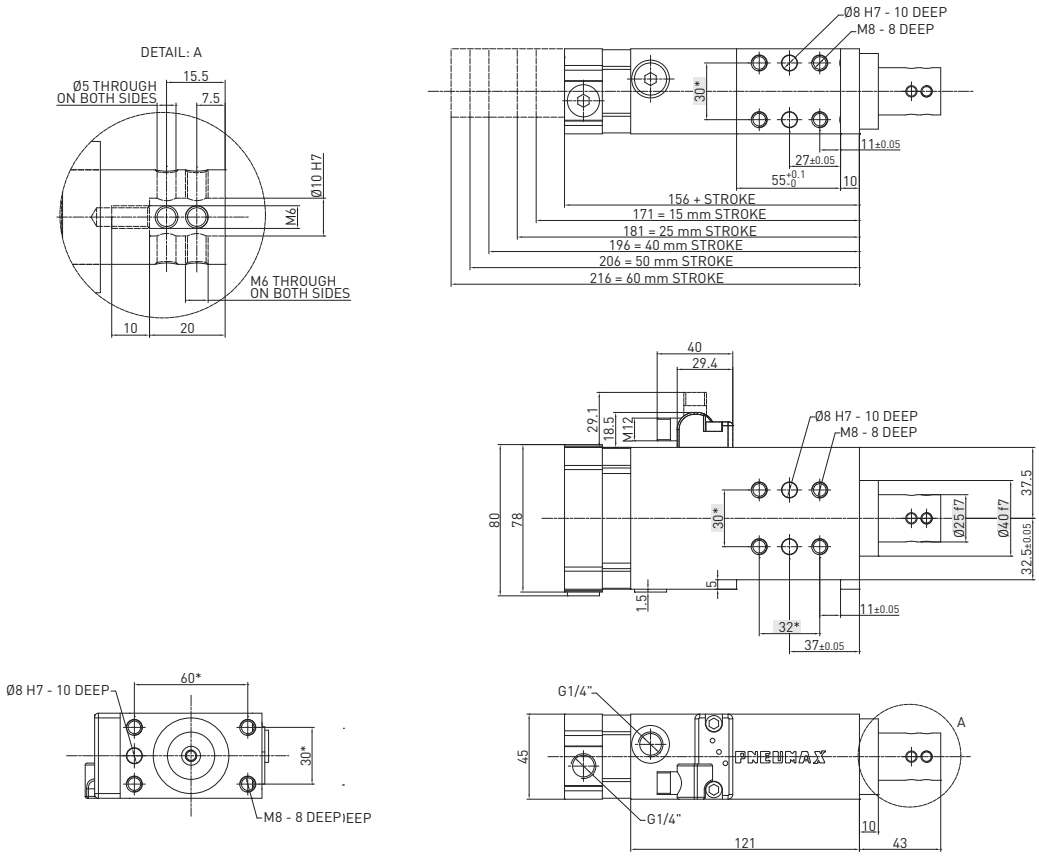

* DIMENSIONAL TOLERANCE FOR DOWEL HOLES: ±0.02

DIMENSIONAL TOLERANCE FOR THREADED HOLES: ±0.1

REV. 00 - 14/03/2016

RP50E _6 / Retractable locating pin package - Size 50 mm - iØ 12 mm flat termination

WEIGHT 1.85 kg
min. stroke version

WEIGHT 2.1 kg
max. stroke version

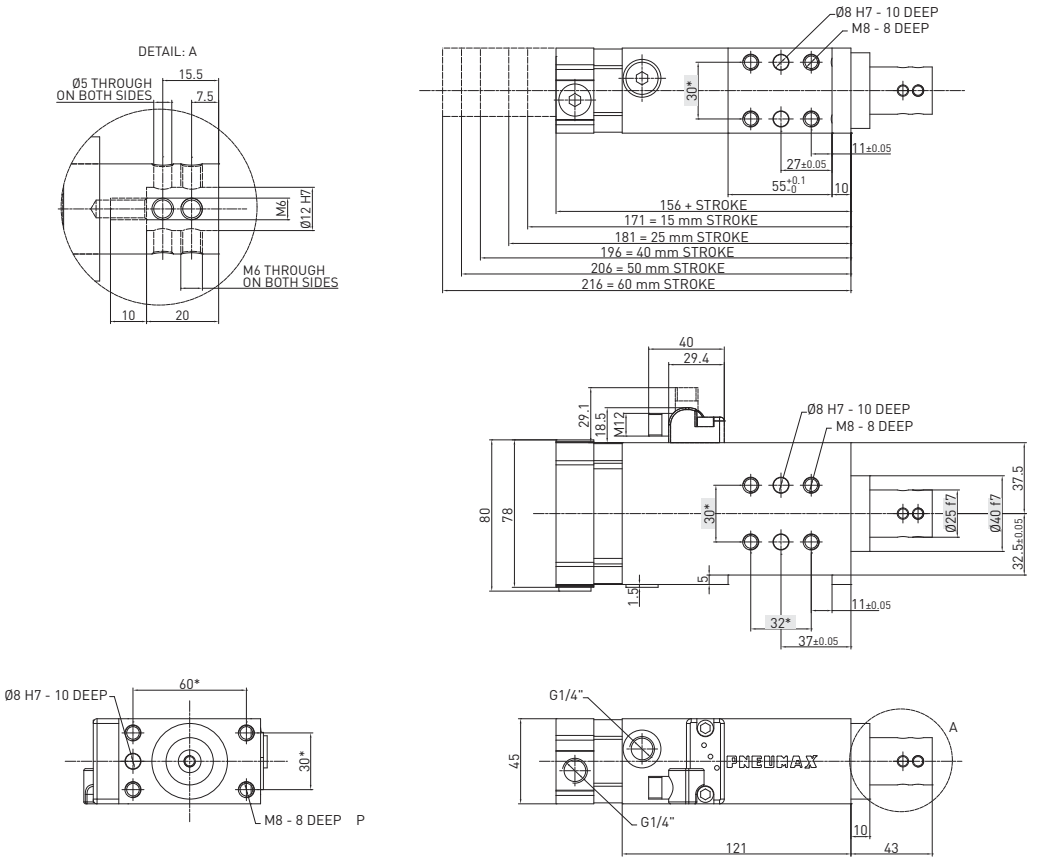

* DIMENSIONAL TOLERANCE FOR DOWEL HOLES: ±0.02

DIMENSIONAL TOLERANCE FOR THREADED HOLES: ±0.1

REV. 01 - 26/02/2016

LOCATING

RP50E _7 / Retractable locating pin package - Size 50 mm - iØ 12 mm CNOMO termination

WEIGHT 1.85 kg
min. stroke version

WEIGHT 2.1 kg
max. stroke version

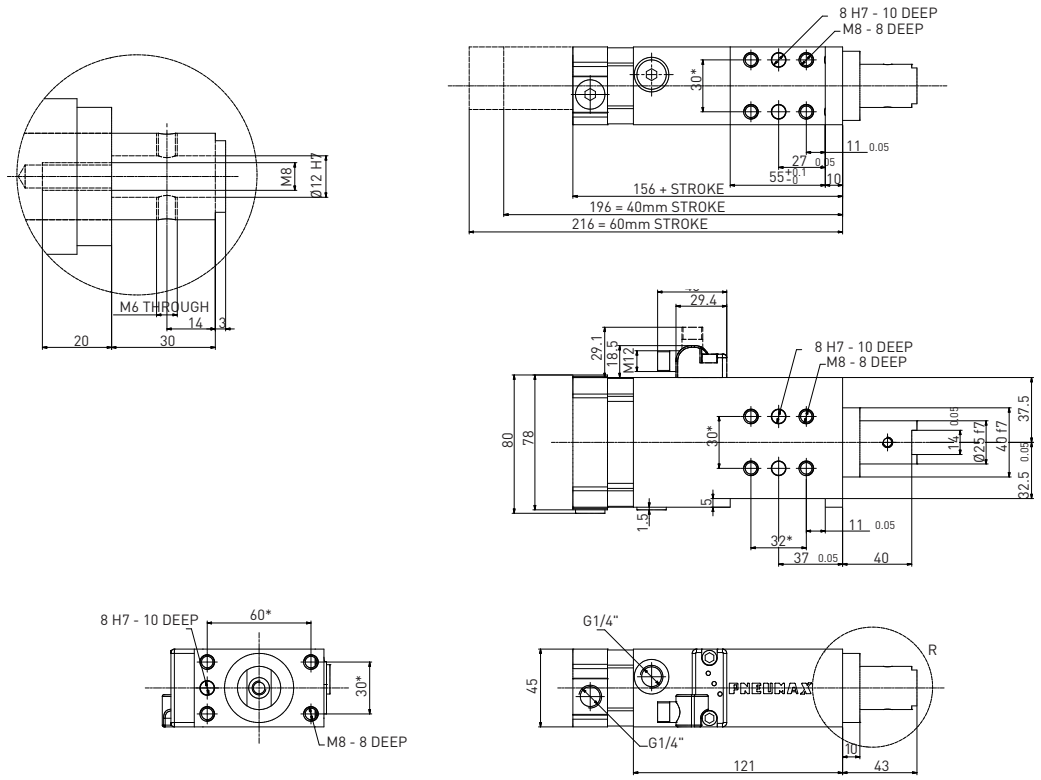

* DIMENSIONAL TOLERANCE FOR DOWEL HOLES: ±0.02

DIMENSIONAL TOLERANCE FOR THREADED HOLES: ±0.1

REV. 00 - 26/09/2017

RP50E _8 / Retractable locating pin package - Size 50 mm - iØ 20 mm CNOMO termination

WEIGHT 1.85 kg
min. stroke version

WEIGHT 2.1 kg
max. stroke version

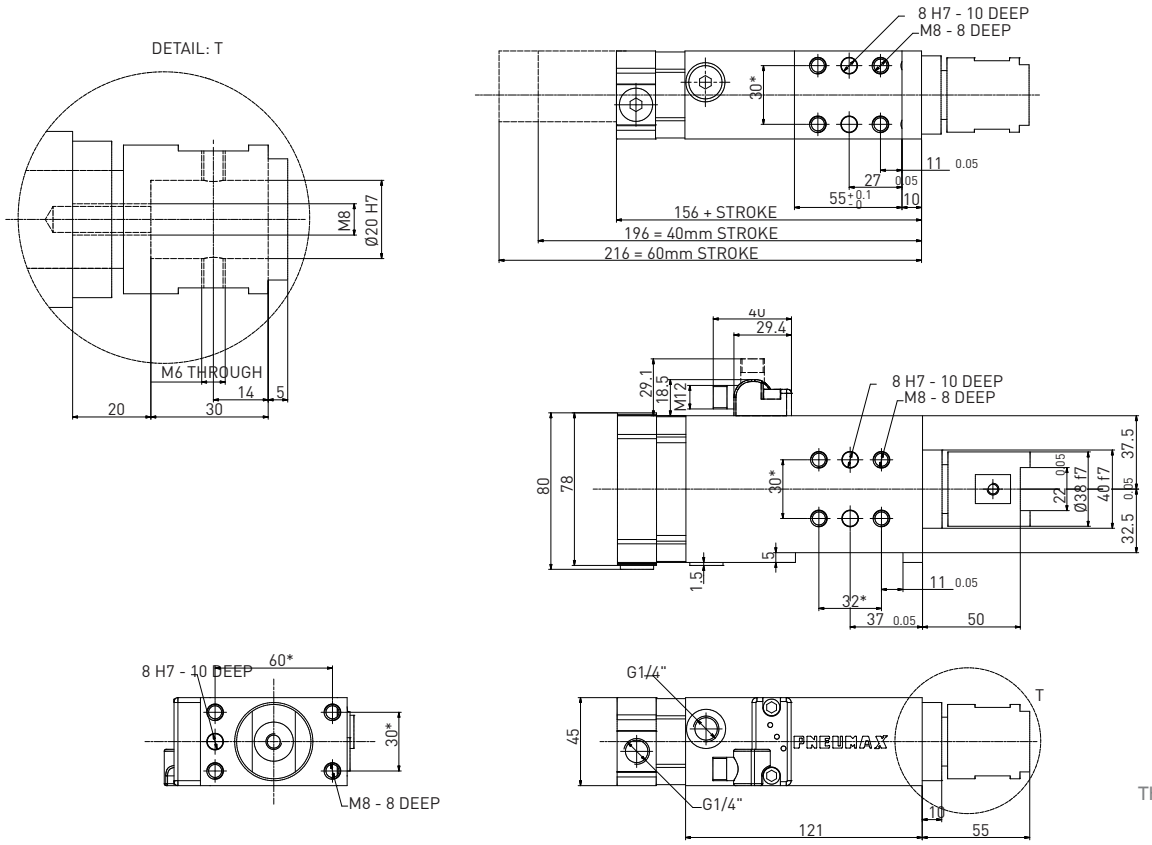

* DIMENSIONAL TOLERANCE FOR DOWEL HOLES: ±0.02

DIMENSIONAL TOLERANCE FOR THREADED HOLES: ±0.1

REV. 00 - 26/09/2017

Technical information are provided for informative purpose only and can be subject to change without prior notice

RD250E _1 / **Retractable locating pin package** - Size 50 mm - iØ 16 mm cross-cut key rod termination with manual operation

WEIGHT 1.85 kg
min. stroke version

WEIGHT 3.1 kg
max. stroke version

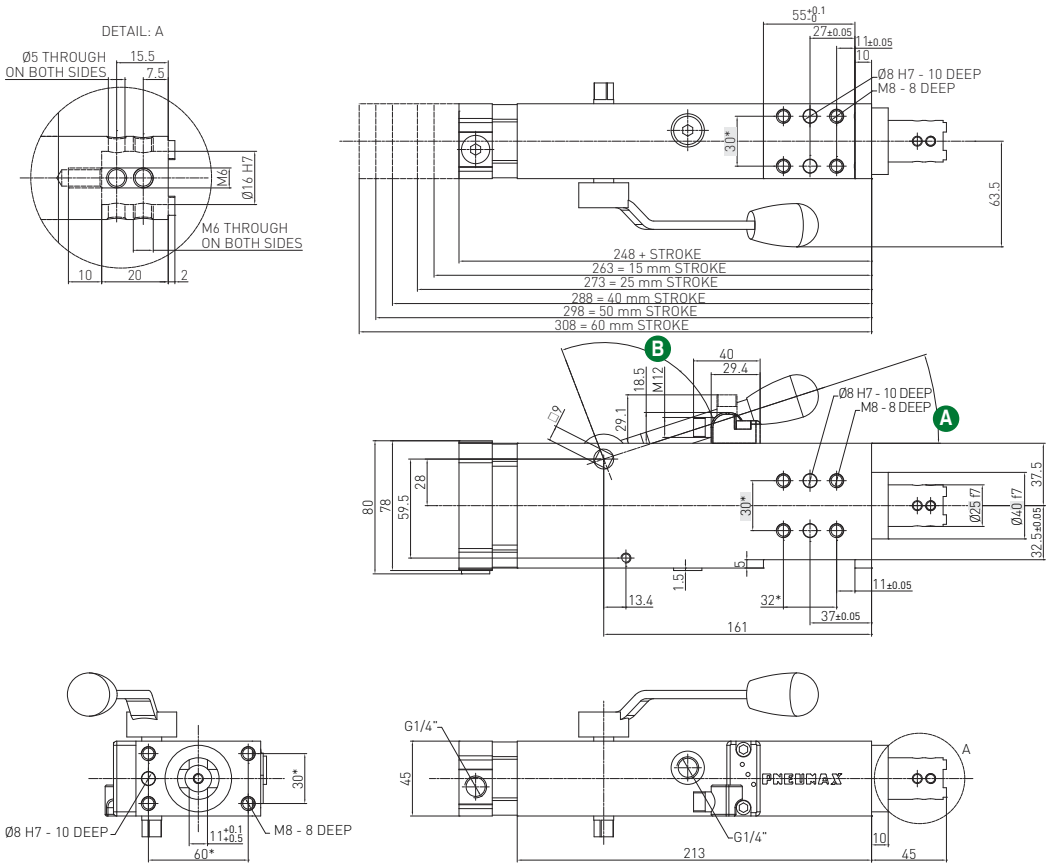

Handle swivel angle

Stroke	A Handle swivel angle	B Handle swivel angle
15	90°	18°
25	70°	38°
40	42°	76°
50	25°	83°
60	15°	93°

Max Hand Force: 200 N

* DIMENSIONAL TOLERANCE FOR DOWEL HOLES: ±0.02

DIMENSIONAL TOLERANCE FOR THREADED HOLES: ±0.1

REV. 00 - 05/03/2018

RD250E _2 / **Retractable locating pin package** - Size 50 mm - iØ 10 mm cross-cut key rod termination with manual operation

WEIGHT 1.85 kg
min. stroke version

WEIGHT 3.1 kg
max. stroke version

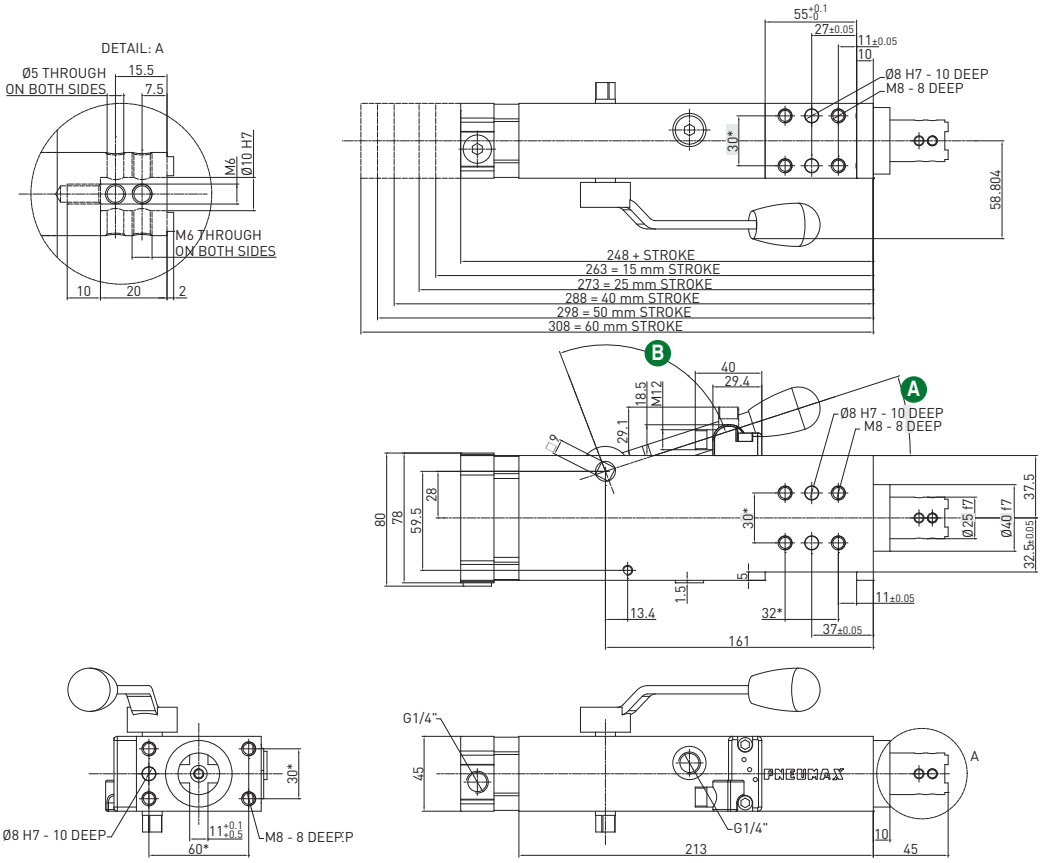

Handle swivel angle

Stroke	A Handle swivel angle	B Handle swivel angle
15	90°	18°
25	70°	38°
40	42°	76°
50	25°	83°
60	15°	93°

Max Hand Force: 200 N

* DIMENSIONAL TOLERANCE FOR DOWEL HOLES: ±0.02

DIMENSIONAL TOLERANCE FOR THREADED HOLES: ±0.1

REV. 01 - 26/02/2016

LOCATING

RD250E _3 / Retractable locating pin package - Size 50 mm - Rod termination for offset pins with manual operation

WEIGHT 1.85 kg
min. stroke version

WEIGHT 3.1 kg
max. stroke version

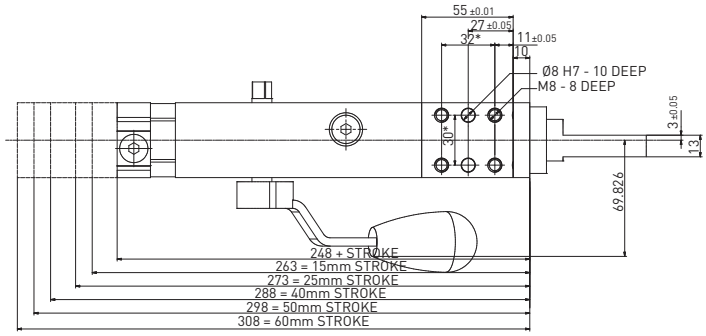

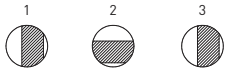

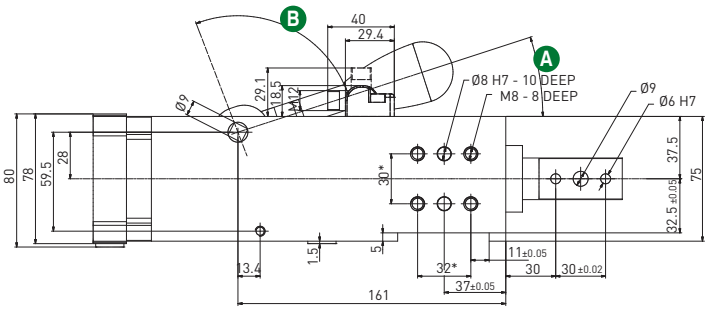

Handle swivel angle

Stroke	A Handle swivel angle	B Handle swivel angle
15	90°	18°
25	70°	38°
40	42°	76°
50	25°	83°
60	15°	93°

Max Hand Force: 200 N

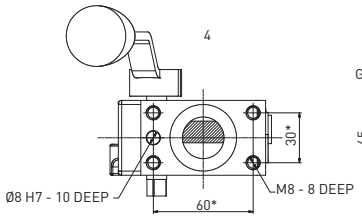

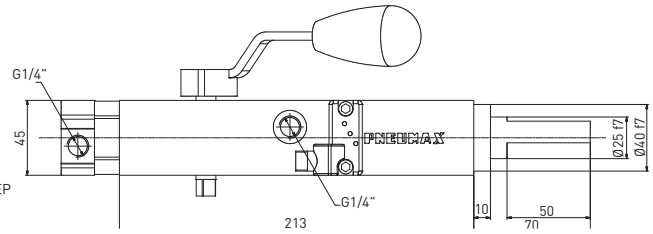

* DIMENSIONAL TOLERANCE FOR DOWEL HOLES: ±0.02

DIMENSIONAL TOLERANCE FOR THREADED HOLES: ±0.1

REV. 03 - 05/03/2018

RD250E _4 / Retractable locating pin package - Size 50 mm - Rod termination with key with manual operation

WEIGHT 2.85 kg
min. stroke version

WEIGHT 3.1 kg
max. stroke version

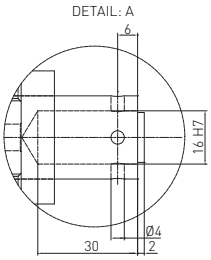

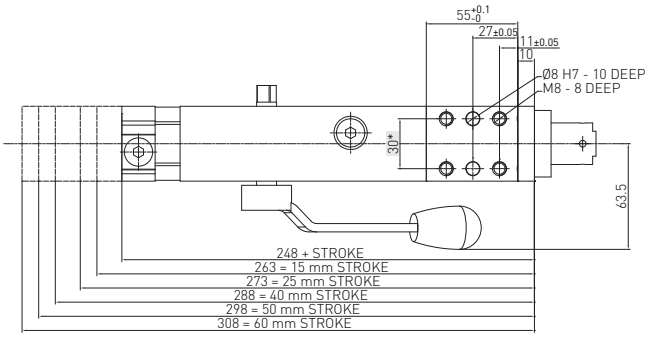

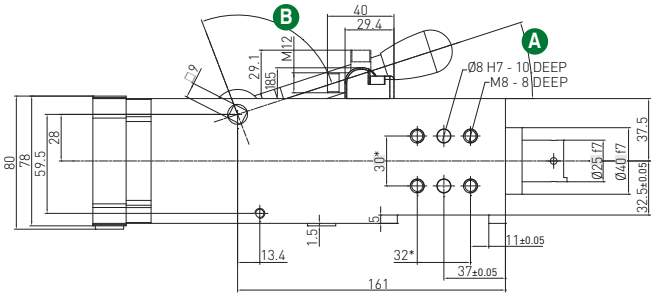

Handle swivel angle

Stroke	A Handle swivel angle	B Handle swivel angle
15	90°	18°
25	70°	38°
40	42°	76°
50	25°	83°
60	15°	93°

Max Hand Force: 200 N

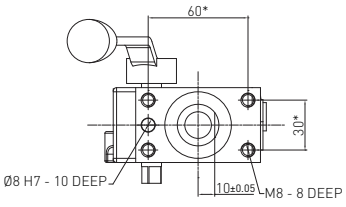

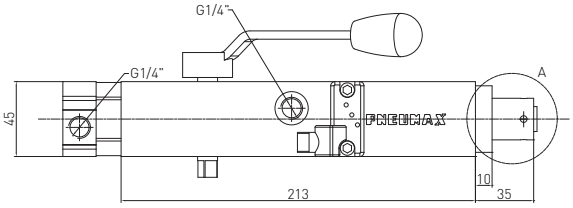

* DIMENSIONAL TOLERANCE FOR DOWEL HOLES: ±0.02

DIMENSIONAL TOLERANCE FOR THREADED HOLES: ±0.1

REV. 04 - 05/03/2018

Technical information are provided for informative purpose only and can be subject to change without prior notice

RM250 _1 / **Manual retractable locating pin package** - Size 50 mm - iØ 16 mm cross-cut key rod termination

WEIGHT 3.2 kg

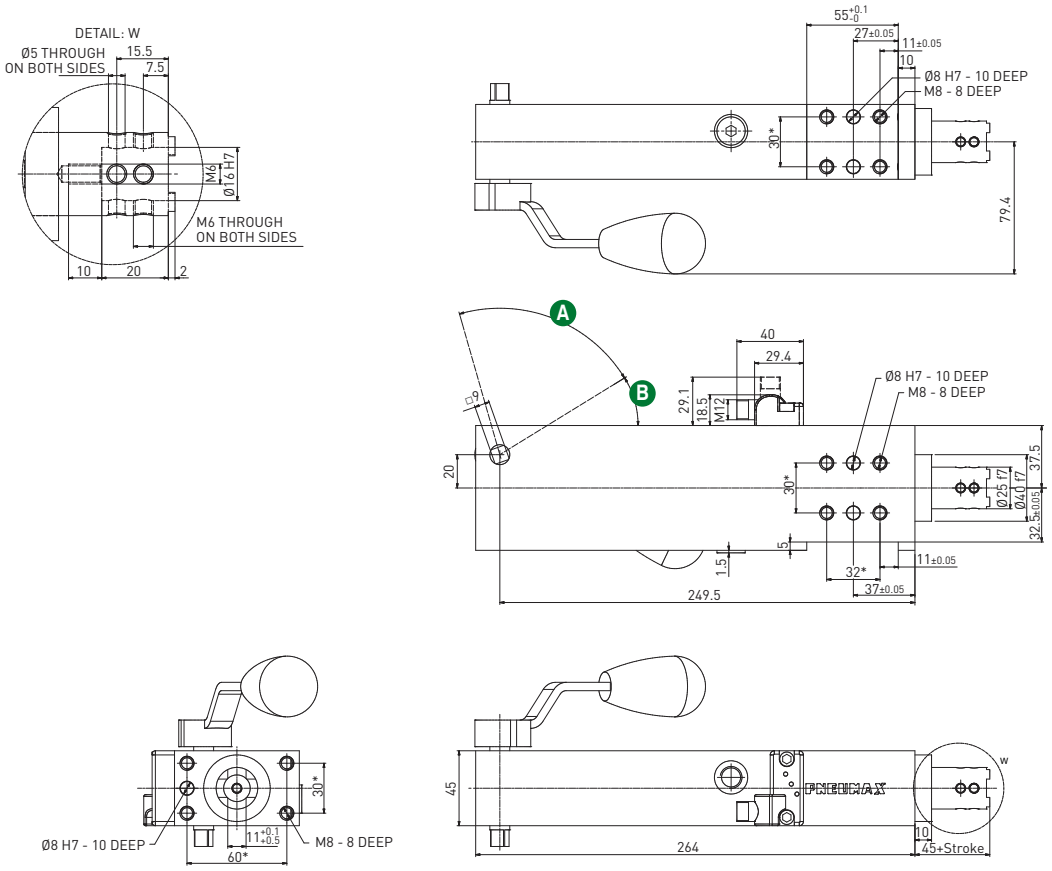

Max Hand Force: 200 N

* DIMENSIONAL TOLERANCE FOR DOWEL HOLES: ±0.02

DIMENSIONAL TOLERANCE FOR THREADED HOLES: ±0.1

REV. 00 - 27/01/2022

RM250 _2 / **Manual retractable locating pin package** - Size 50 mm - iØ 16 mm cross-cut key rod termination

WEIGHT 3.2 kg

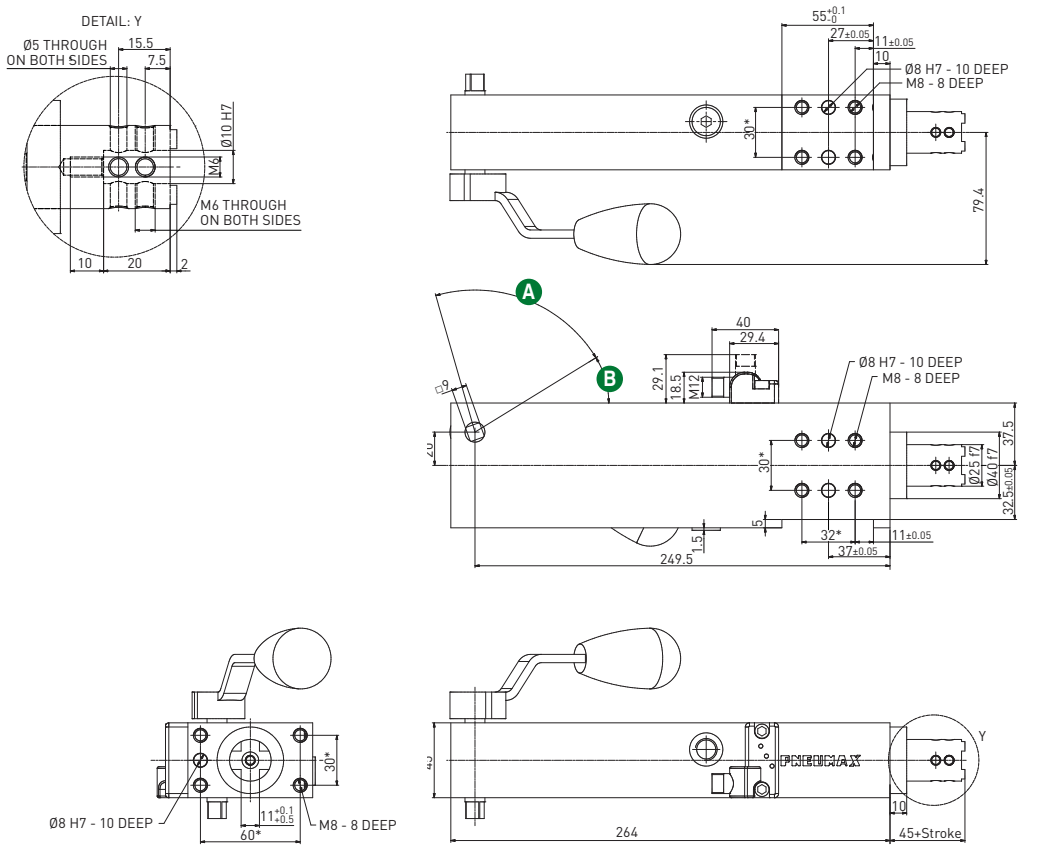

Max Hand Force: 200 N

* DIMENSIONAL TOLERANCE FOR DOWEL HOLES: ±0.02

DIMENSIONAL TOLERANCE FOR THREADED HOLES: ±0.1

REV. 00 - 27/01/2022

RM250 _3 / **Manual retractable locating pin package** - Size 50 mm - iØ 16 mm cross-cut key rod termination

WEIGHT 3.2 kg

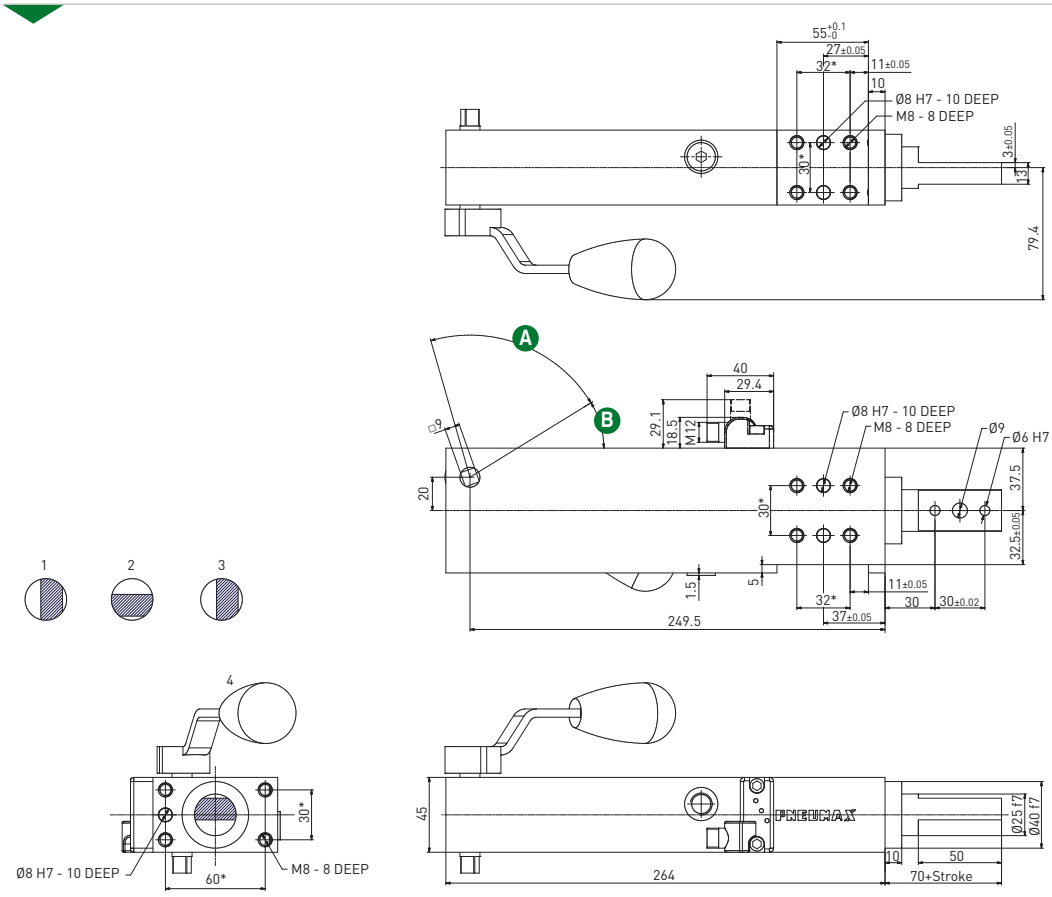

Max Hand Force: 200 N

* DIMENSIONAL TOLERANCE FOR DOWEL HOLES: ±0.02

DIMENSIONAL TOLERANCE FOR THREADED HOLES: ±0.1

REV. 00 - 27/01/2022

RM250 _4 / **Manual retractable locating pin package** - Size 50 mm - iØ 16 mm cross-cut key rod termination

WEIGHT 3.2 kg

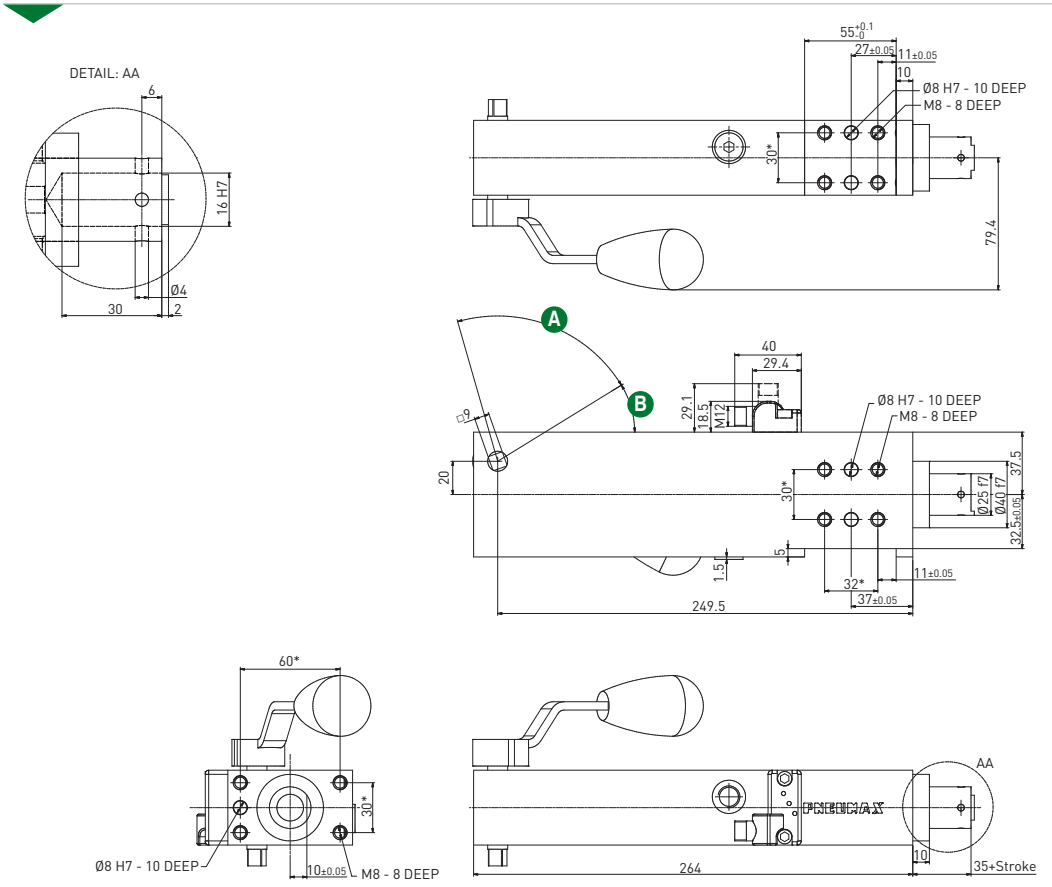

Max Hand Force: 200 N

* DIMENSIONAL TOLERANCE FOR DOWEL HOLES: ±0.02

DIMENSIONAL TOLERANCE FOR THREADED HOLES: ±0.1

REV. 00 - 27/01/2022

Technical information are provided for informative purpose only and can be subject to change without prior notice

RP63E _1 / **Retractable locating pin package** - Size 63 mm - iØ 16 mm cross-cut key rod termination

WEIGHT 2.45 kg
min. stroke version

WEIGHT 2.75 kg
max. stroke version

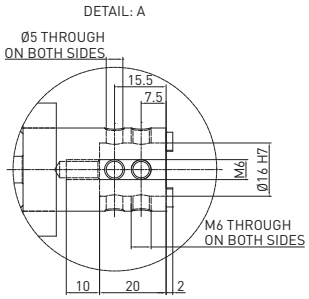

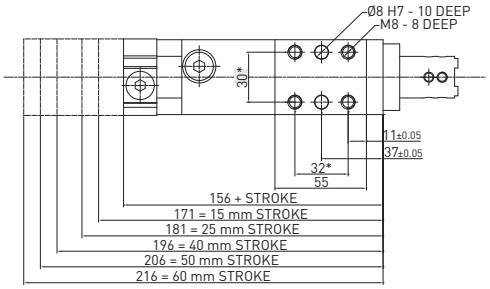

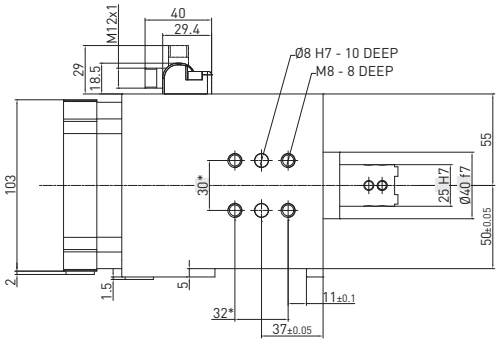

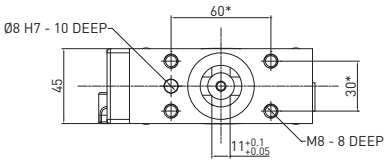

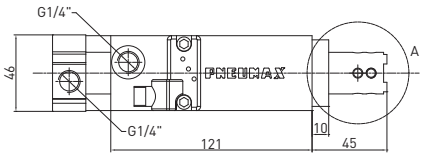

* DIMENSIONAL TOLERANCE FOR DOWEL HOLES: ±0.02

DIMENSIONAL TOLERANCE FOR THREADED HOLES: ±0.1

REV. 01 - 29/02/2016

RP63E _2 / **Retractable locating pin package** - Size 63 mm - iØ 10 mm cross-cut key rod termination

WEIGHT 2.45 kg
min. stroke version

WEIGHT 2.75 kg
max. stroke version

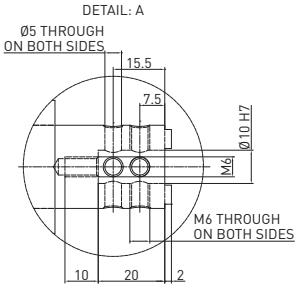

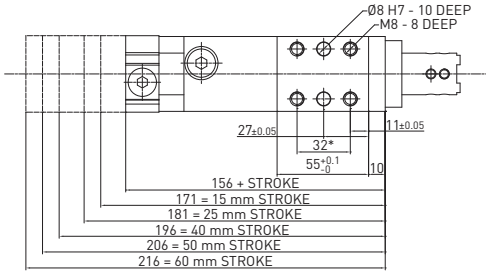

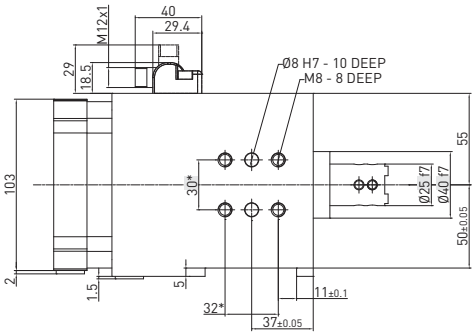

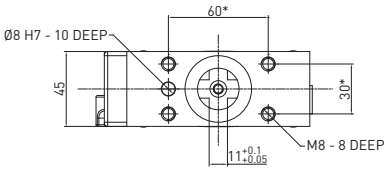

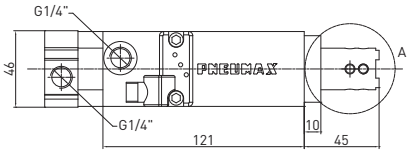

* DIMENSIONAL TOLERANCE FOR DOWEL HOLES: ±0.02

DIMENSIONAL TOLERANCE FOR THREADED HOLES: ±0.1

REV. 01 - 29/02/2016

LOCATING

RP63E _3 / **Retractable locating pin package** - Size 63 mm - Rod termination for offset pins

WEIGHT 2.45 kg
min. stroke version

WEIGHT 2.75 kg
max. stroke version

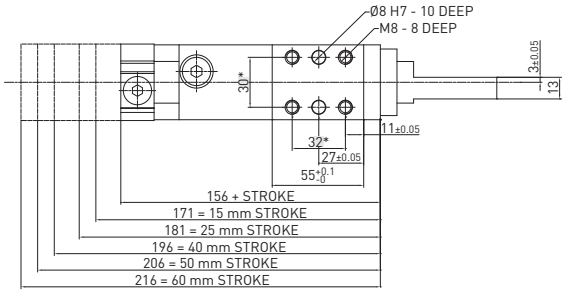

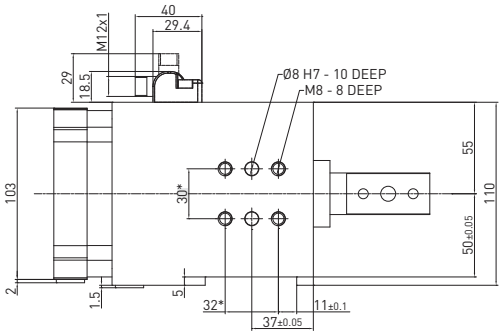

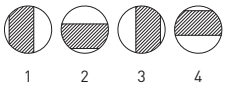

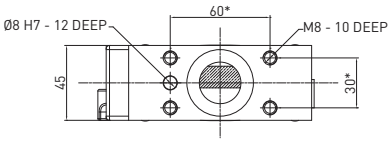

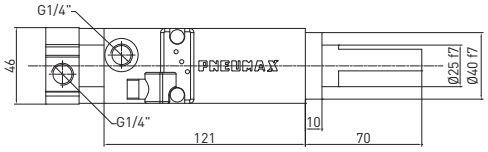

* DIMENSIONAL TOLERANCE FOR DOWEL HOLES: ±0.02

DIMENSIONAL TOLERANCE FOR THREADED HOLES: ±0.1

REV. 00 - 31/03/2015

RP63E _4 / **Retractable locating pin package** - Size 63 mm - Rod termination with key

WEIGHT 2.45 kg
min. stroke version

WEIGHT 2.75 kg
max. stroke version

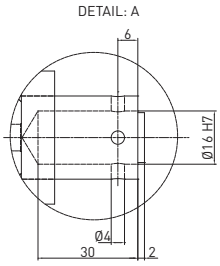

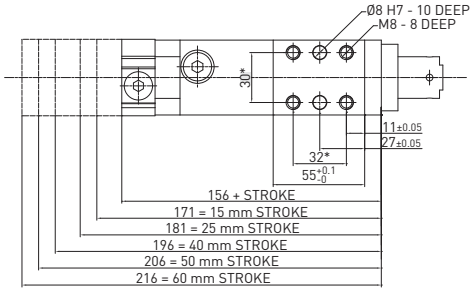

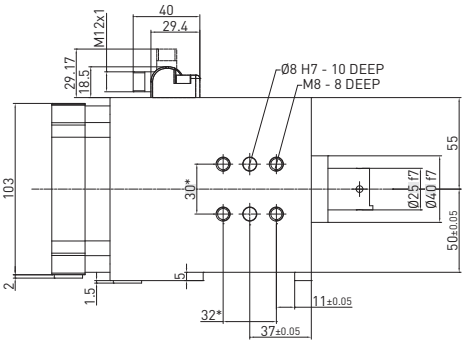

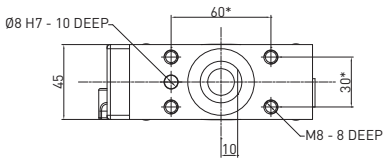

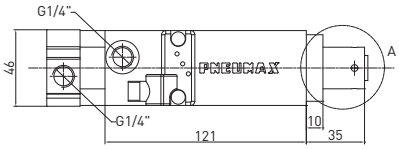

* DIMENSIONAL TOLERANCE FOR DOWEL HOLES: ±0.02

DIMENSIONAL TOLERANCE FOR THREADED HOLES: ±0.1

REV. 00 - 31/03/2015

Technical information are provided for informative purpose only and can be subject to change without prior notice

RP63E _5 / **Retractable locating pin package** - Size 63 mm - iØ 10 mm flat termination

WEIGHT 2.45 kg
min. stroke version

WEIGHT 2.75 kg
max. stroke version

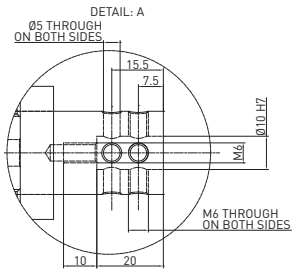

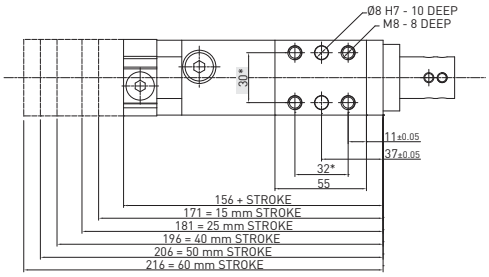

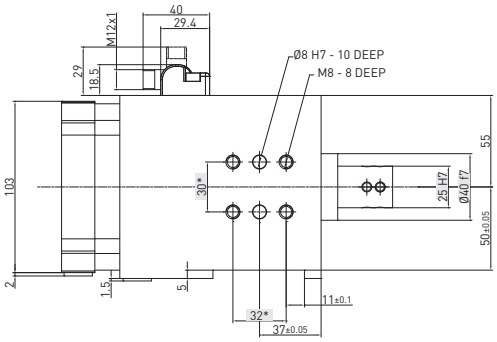

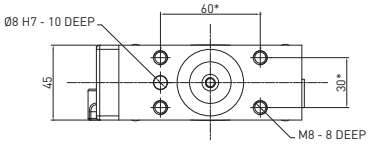

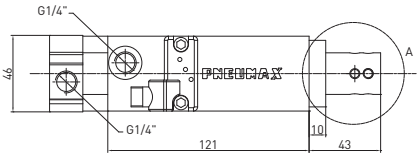

* DIMENSIONAL TOLERANCE FOR DOWEL HOLES: ±0.02

DIMENSIONAL TOLERANCE FOR THREADED HOLES: ±0.1

REV. 00 -15/03/2016

RP63E _6 / **Retractable locating pin package** - Size 63 mm - iØ 12 mm flat termination

WEIGHT 2.45 kg
min. stroke version

WEIGHT 2.75 kg
max. stroke version

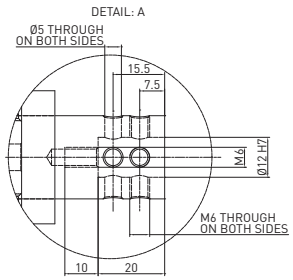

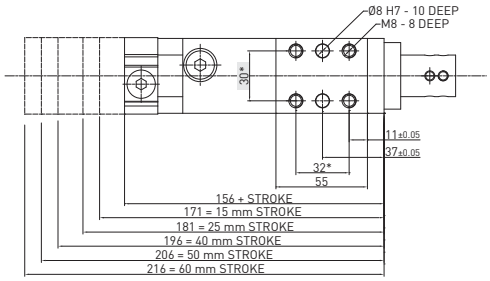

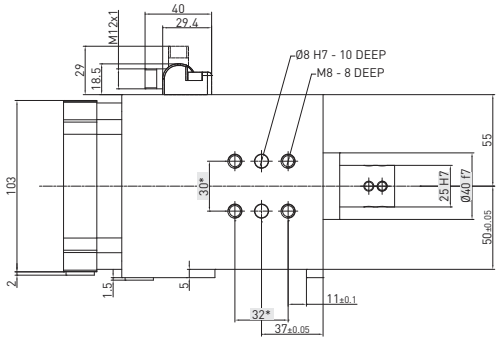

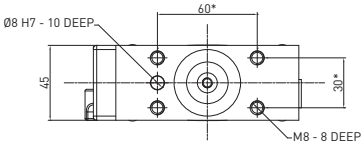

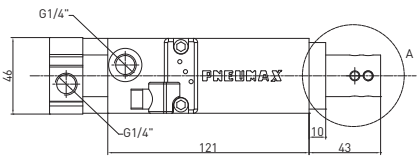

* DIMENSIONAL TOLERANCE FOR DOWEL HOLES: ±0.02

DIMENSIONAL TOLERANCE FOR THREADED HOLES: ±0.1

REV. 00 -15/03/2016

RT-Series

Retractable locating pin packages with toggle linkage

- **Fully encapsulated toggle mechanism: in case of air loss, the working position remains secure**
- **Manual unlock mechanism to disengage the linkage in emergency situations**
- **Position repeatability ± 0.05 mm**
- **Clear design with user-friendly surfaces and no dirt or welding deposit traps**

LOCATING

Technical features

Pneumatic ports on both sides of the cylinder.	
Operating features	
Operating pressure	from 2 to 8 bar / from 30 to 115 psi
Lubrication	all the devices are lubricated for life at the factory. Inline air lubrication isn't required

Functional charts

Size 40 mm

- **Max deflection**

40 mm	0.5	0.004	0.009	0.004
	1	0.009	0.02	0.009
	1.5	0.013	0.032	0.013
	2	0.018	0.047	0.018
	2.5	0.022	0.66	0.022
	3	0.026	0.075	0.026

- **Functional data (at 5 bar / 72.5 psi)**

Thrust force at end stroke	**2700 N**

- **Cycle time for max stroke**
  < 0.8 s NO flow valve required

- **Air consumption**
  Air consumption for complete cycle
  REV. 00 - 18/06/2015

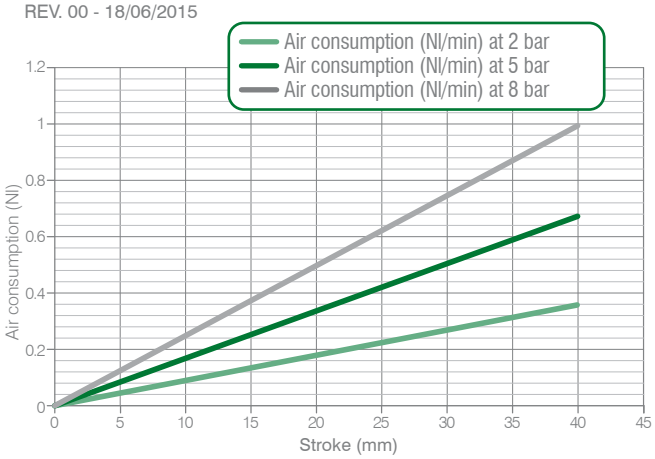

Load position A	Load position B	Load position C
Horizontal mounting position of the retractable locating pin/load centre on the rod	Horizontal mounting position of the retractable locating pin/load centre at 100 mm from the rod axis	Vertical mounting position of the retractable locating pin/load centre at 100 mm from the rod axis

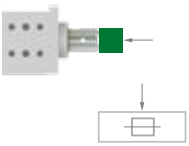

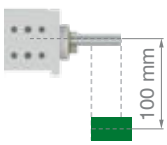

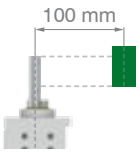

Technical information are provided for informative purpose only and can be subject to change without prior notice

RT-Series / Ordering string

RT_40-series

R	T	40	E	40	G	3	1

R	**VERSION**	**R** = retractable locating pin package with toggle lock
T	**OPERATION**	**T** = pneumatic with toggle lock **TD** = pneumtic with manul operation and toggle lock
40	**SIZE**	**40** = Ø 40 mm
E	**SENSOR**	**E** = electronic sensor with M12 swivel connector -PNP
40	**STROKE**	**40** = 40 mm
G	**PORTS**	**G** = G thread – BSPP
3	**ROD TERMINATION**	**1** = iØ 16 mm cross-cut key rod termination **3** = rod termination for offset pins
1	**ROD ORIENTATION (for termination type 3)**	**1** = **2** = **3** = **4** =

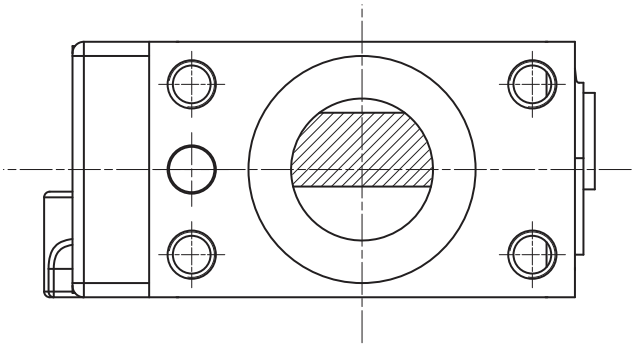

LOCATING

LOCATING

RT40E40G1 / Retractable locating pin package with toggle lock - Size 40 mm - iØ 16 mm cross-cut key rod termination

WEIGHT 3,33 kg

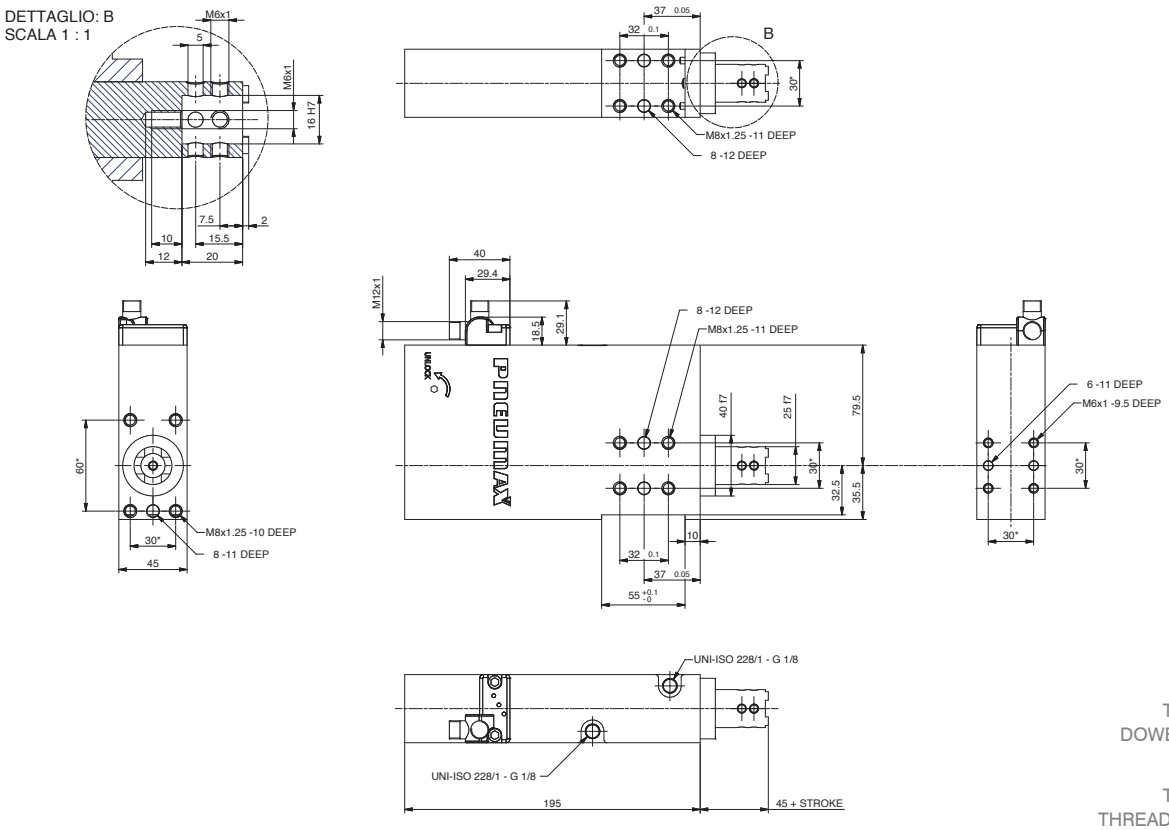

* DIMENSIONAL TOLERANCE FOR DOWEL HOLES: ±0.02

DIMENSIONAL TOLERANCE FOR THREADED HOLES: ±0.1

REV. 00 - 23/07/2021

RT40E40G3_ / Retractable locating pin package with toggle lock and manual operation - Size 40 mm rod termination for offset pins

WEIGHT 3,9 kg

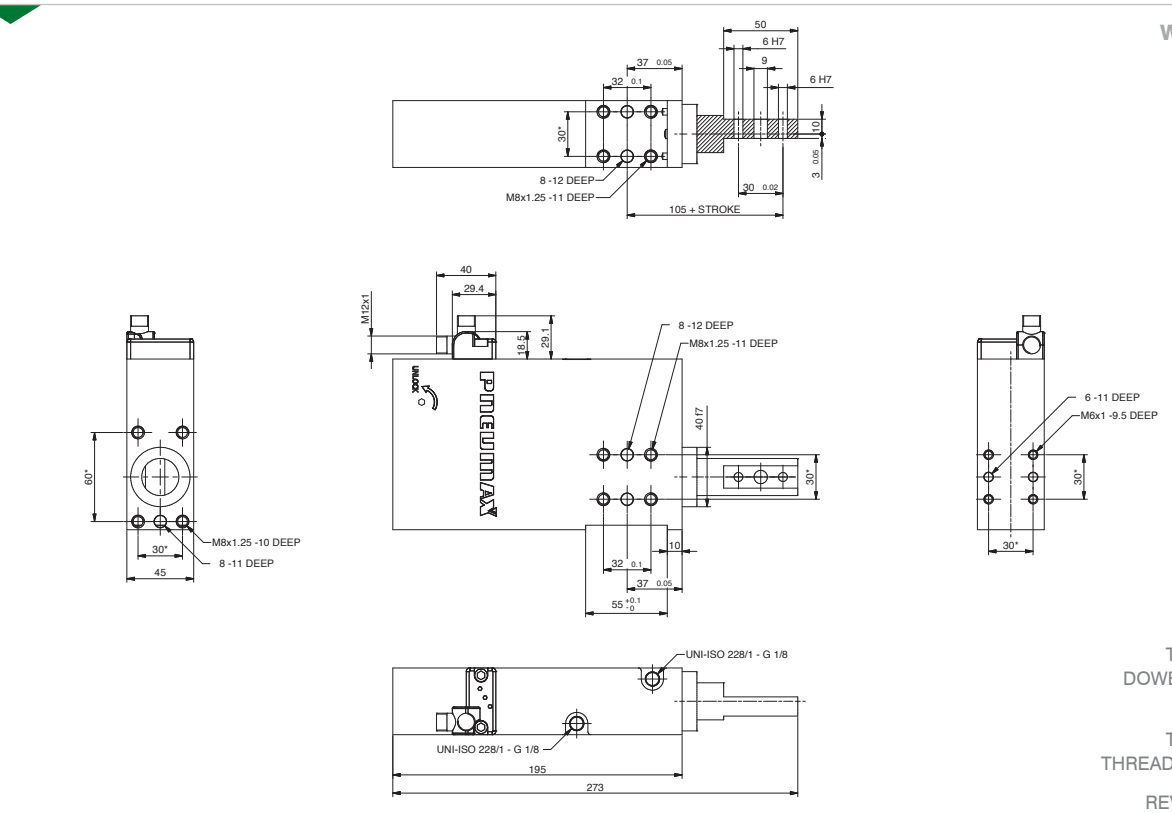

* DIMENSIONAL TOLERANCE FOR DOWEL HOLES: ±0.02

DIMENSIONAL TOLERANCE FOR THREADED HOLES: ±0.1

REV. 01 - 30/06/2022

Technical information are provided for informative purpose only and can be subject to change without prior notice

RTD40E40G1 / **Retractable locating pin package with toggle lock and manual operation** - Size 40 mm
iØ 16 mm cross-cut key rod termination

WEIGHT 3,58 kg
Handle included

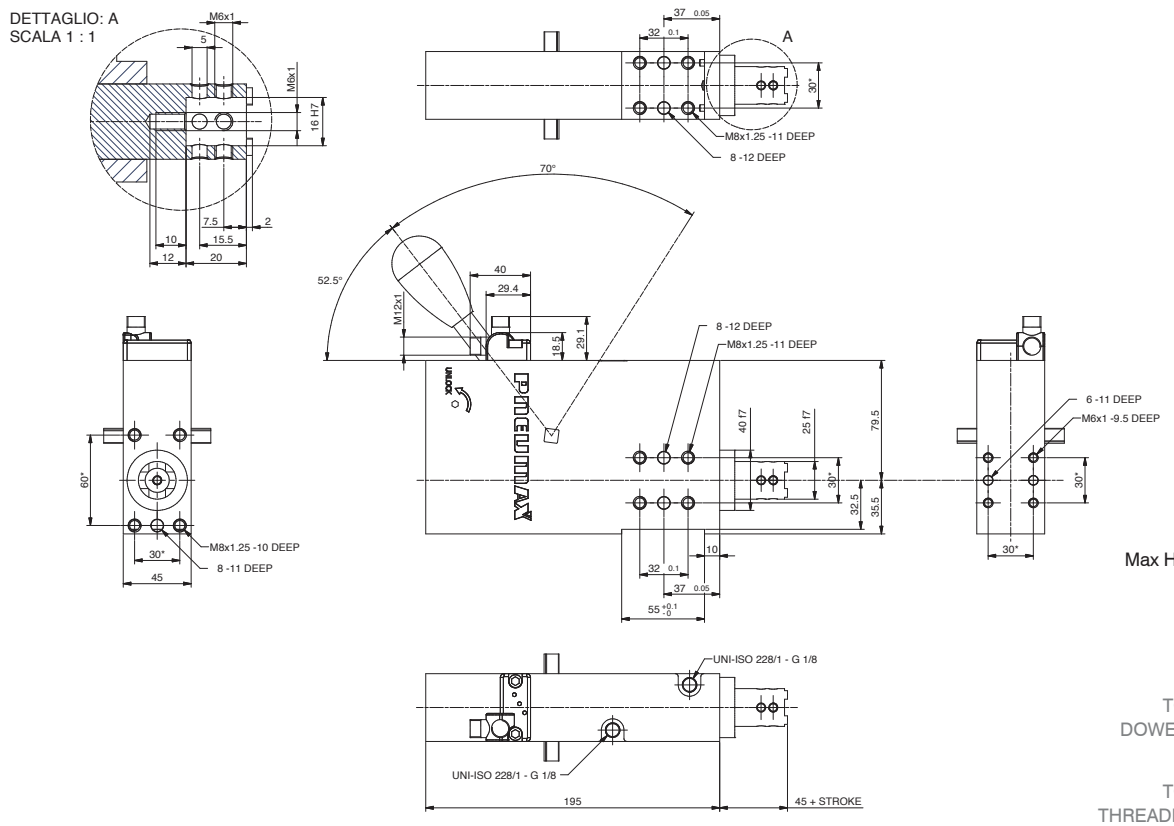

Max Hand Force: 200 N

* DIMENSIONAL TOLERANCE FOR DOWEL HOLES: ±0.02

DIMENSIONAL TOLERANCE FOR THREADED HOLES: ±0.1

REV. 00 - 23/07/2021

RTD40E40G3_ / **Retractable locating pin package with toggle lock and manual operation** - Size 40 mm
rod termination for offset pins

WEIGHT 3,9 kg
Handle included

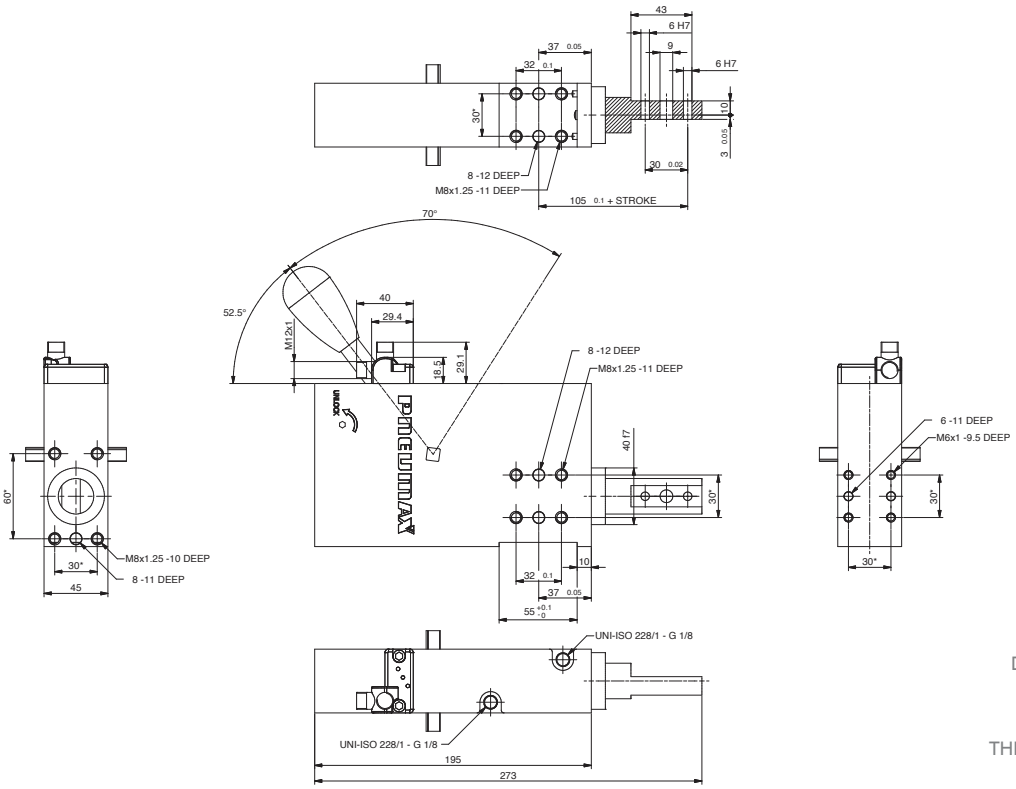

Max Hand Force: 200 N

* DIMENSIONAL TOLERANCE FOR DOWEL HOLES: ±0.02

DIMENSIONAL TOLERANCE FOR THREADED HOLES: ±0.1

REV. 01 - 30/06/2022

LOCATING

RC-Series

Retractable locating pin packages with CNOMO mounting pattern

CNOMO

Technical features

Pneumatic ports on both sides of the cylinder.

Operating features	
Operating pressure	from 2 to 8 bar / from 30 to 115 psi
Lubrication	all the devices are lubricated for life at the factory. Inline air lubrication isn't required

LOCATING

Functional charts

Ø 50 mm

- **Max deflection**

Stroke	Load (kg)	Load position A deviation (mm)	Load position B deviation (mm)	Load position C deviation (mm)	Load position D deviation (mm)
50 mm	0.5	0.006	0.009	0.007	0.03
	1	0.013	0.02	0.018	0.07
	1.5	0.021	0.032	0.028	0.1
	2	0.026	0.047	0.043	0.12
	2.5	0.032	0.66	0.057	-
	3	0.037	0.075	0.068	-
25 mm	0.5	0	0.005	0	0.01
	1	0.005	0.015	0.005	0.03
	1.5	0.007	0.032	0.007	0.06
	2	0.011	0.047	0.011	0.08
	2.5	0.012	0.66	0.012	-
	3	0.014	0.075	0.014	-

Load position A

Horizontal mounting position of the retractable locating pin/load centre on the rod

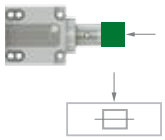

Load position B

Horizontal mounting position of the retractable locating pin/load centre at 100 mm from the rod axis

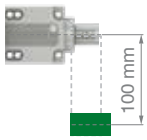

Load position C

Vertical mounting position of the retractable locating pin/load centre at 100 mm from the rod axis

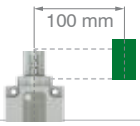

Load position D

100 mm in z

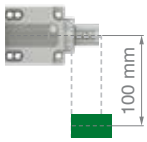

- **Functional data (at 5 bar / 72.5 psi)**

Thrust force	825 N
Pull force	980 N
Max bending moment	3 N m / 2.21 lb·ft
Max distance from the load centre to the rod	200 mm
Interchangeability of the mounting	± 0,05 mm
Interchangeability of the mounting to the rod termination	± 0,15 mm
Rod output repeatability	± 0,04 mm
Protection degree:	IP 56 for pin packages IP67 for sensor
Operating temperature	-0 °C + 50 °C
Storage temperature	-25 °C + 60 °C

- **Cycle time for max stroke**
  < 0.8 s NO flow valve required

- **Air consumption**
  Air consumptionfor complete cycle
  REV. 00 - 18/06/2015

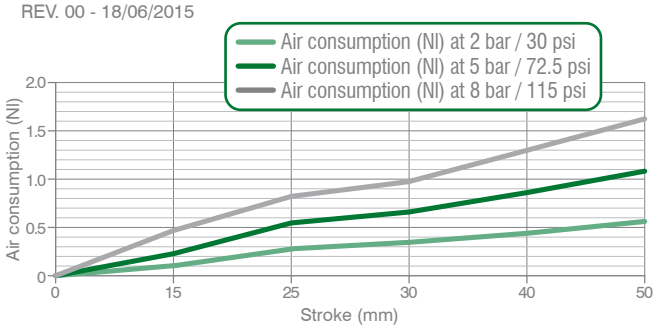

Technical information are provided for informative purpose only and can be subject to change without prior notice

Size 63 mm

- **Max deflection**

Stroke	Load (kg)	Load position A deviation (mm)	Load position B deviation (mm)	Load position C deviation (mm)	Load position D deviation (mm)
50 mm	0.5	0.006	0.009	0.007	0.03
	1	0.013	0.02	0.018	0.07
	1.5	0.021	0.032	0.028	0.1
	2	0.026	0.047	0.043	0.12
	2.5	0.032	0.66	0.057	-
	3	0.037	0.075	0.068	-
25 mm	0.5	0	0.005	0	0.01
	1	0.005	0.015	0.005	0.03
	1.5	0.007	0.032	0.007	0.06
	2	0.011	0.047	0.011	0.08
	2.5	0.012	0.66	0.012	-
	3	0.014	0.075	0.014	-

Load position A

Horizontal mounting position of the retractable locating pin/load centre on the rod

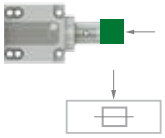

Load position B

Horizontal mounting position of the retractable locating pin/load centre at 100 mm from the rod axis

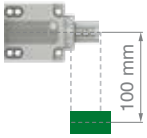

Load position C

Vertical mounting position of the retractable locating pin/load centre at 100 mm from the rod axis

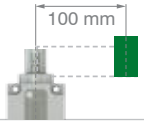

Load position D

100 mm in z

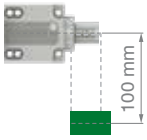

- **Functional data (at 5 bar / 72.5 psi)**

Thrust force	825 N
Pull force	980 N
Max bending moment	3 N m / 2.21 lb·ft
Max distance from the load centre to the rod	200 mm
Interchangeability of the mounting	± 0,05 mm
Interchangeability of the mounting to the rod termination	± 0,15 mm
Rod output repeatability	± 0,04 mm
Protection degree:	IP 56 for pin packages IP67 for sensor
Operating temperature	-0 °C + 50 °C
Storage temperature	-25 °C + 60 °C

- **Cycle time for max stroke**
  < 0.8 s NO flow valve required

- **Air consumption**
  Air consumptionfor complete cycle
  REV. 00 - 18/06/2015

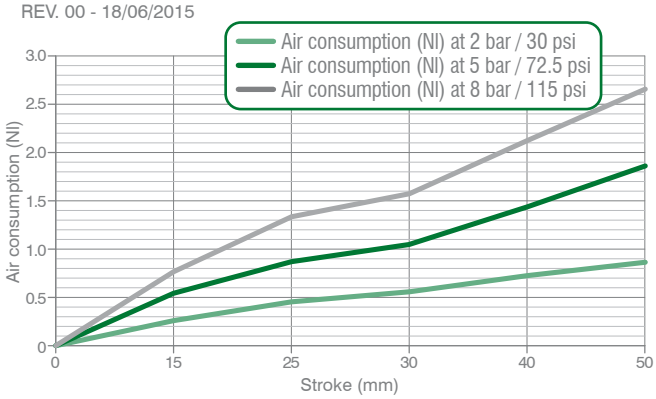

Please get in touch with our technical representatives for any application which exceeds the above values, to find the appropriate solution for your application.

Ordering string

RC-Series

RC 50 C 25 1 G

RC	VERSION	**RC** = retractable locating pin package with CNOMO mounting pattern **RCD** = retractable locating pin package with CNOMO mounting pattern and manual operation
50	SIZE	**50** = Ø 50 mm **63** = Ø 63 mm
C	SENSOR	**C** = CNOMO sensor **N** = no sensor
25	STROKE	**25** = 25 mm **50** = 50 mm
1	ROD TERMINATION	**1** = iØ 12 mm rod termination **2** = iØ 20 mm rod termination
G	PORTS	**G** = G thread – BSPP

LOCATING

LOCATING

RC50_ _1 / Retractable locating pin package with CNOMO mounting pattern - Size 50 mm - iØ 12 mm rod termination

WEIGHT 1.8 kg
min. stroke version

WEIGHT 1.9 kg
max. stroke version

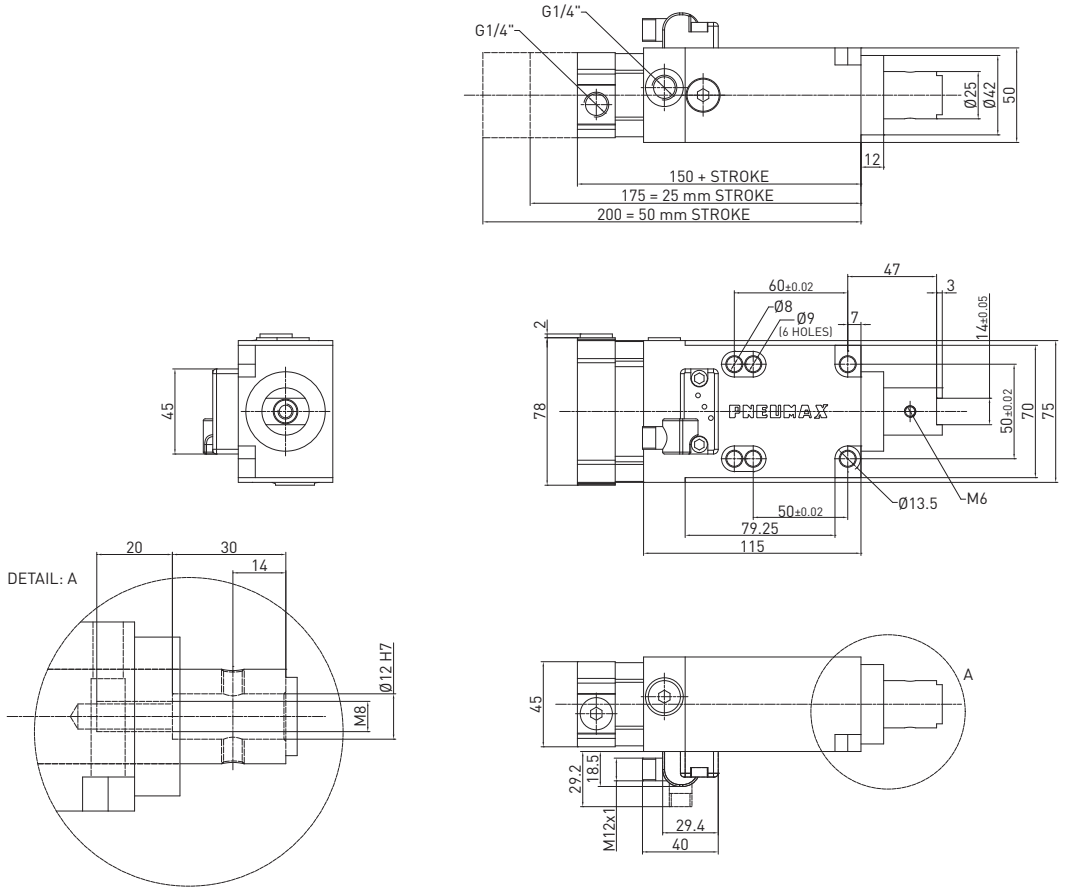

REV. 01 - 31/03/2015

RC50_ _2 / Retractable locating pin package with CNOMO mounting pattern - Size 50 mm - iØ 20 mm rod termination

WEIGHT 2 kg
min. stroke version

WEIGHT 2.1 kg
max. stroke version

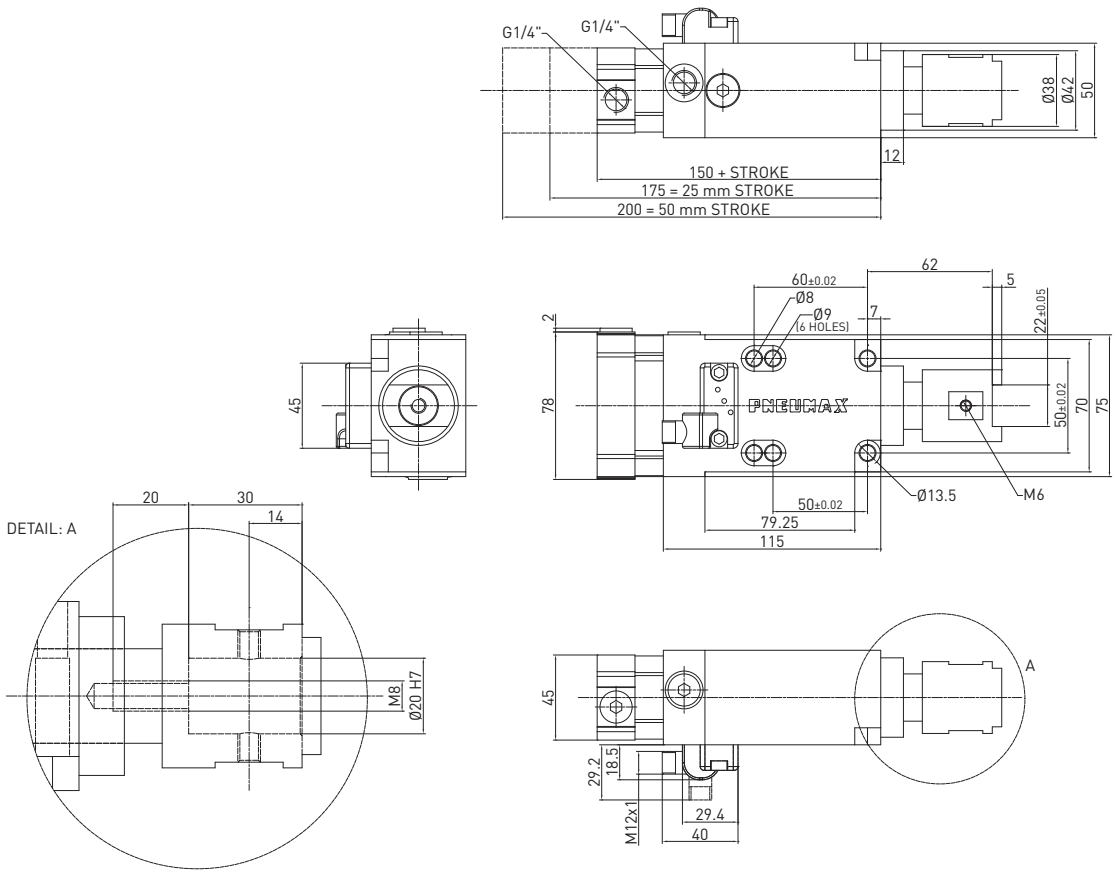

REV. 01 - 22/10/2015

Technical information are provided for informative purpose only and can be subject to change without prior notice

RC63_ _1 / Retractable locating pin package with CNOMO mounting pattern - Size 63 mm - iØ 12 mm rod termination

WEIGHT 2 kg
min. stroke version

WEIGHT 2.1 kg
max. stroke version

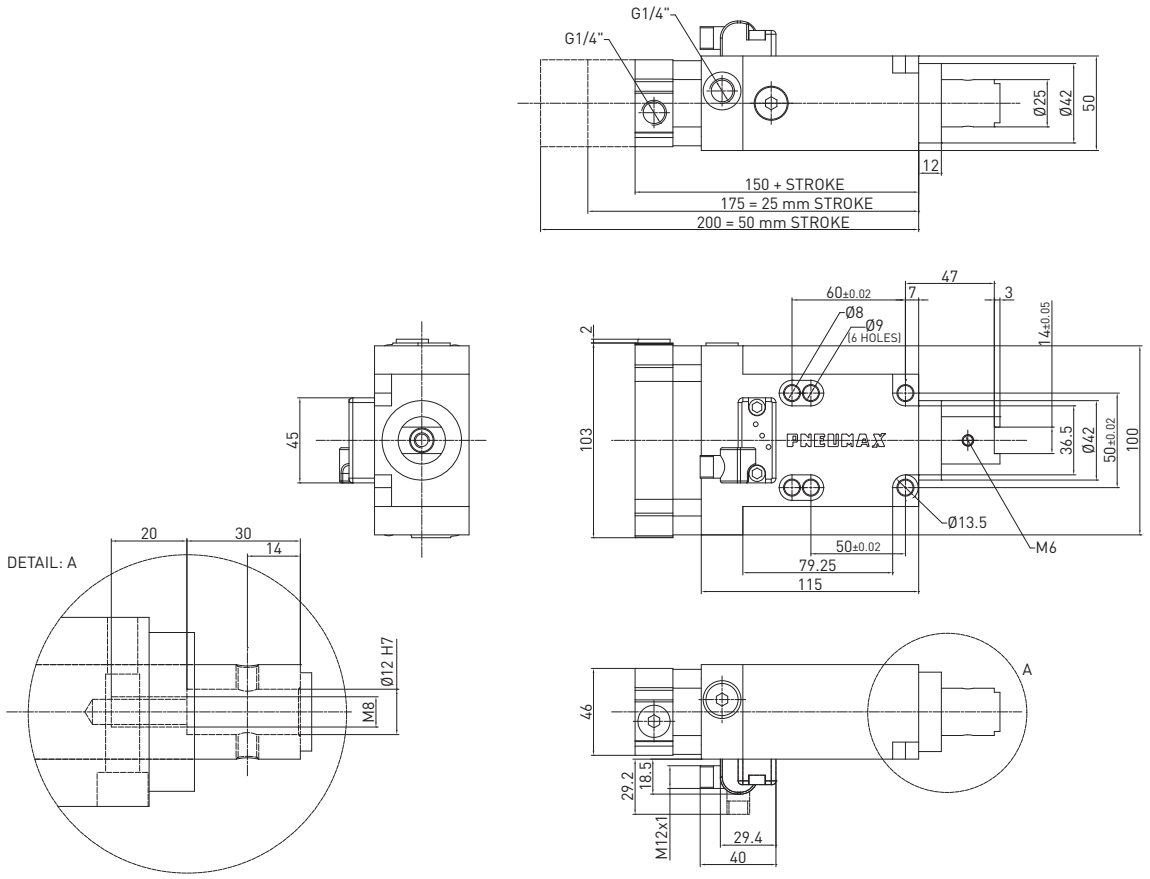

REV. 01 - 31/03/2015

RC63_ _2 / Retractable locating pin package with CNOMO mounting pattern - Size 63 mm - iØ 20 mm rod termination

WEIGHT 2.2 kg
min. stroke version

WEIGHT 2.3 kg
max. stroke version

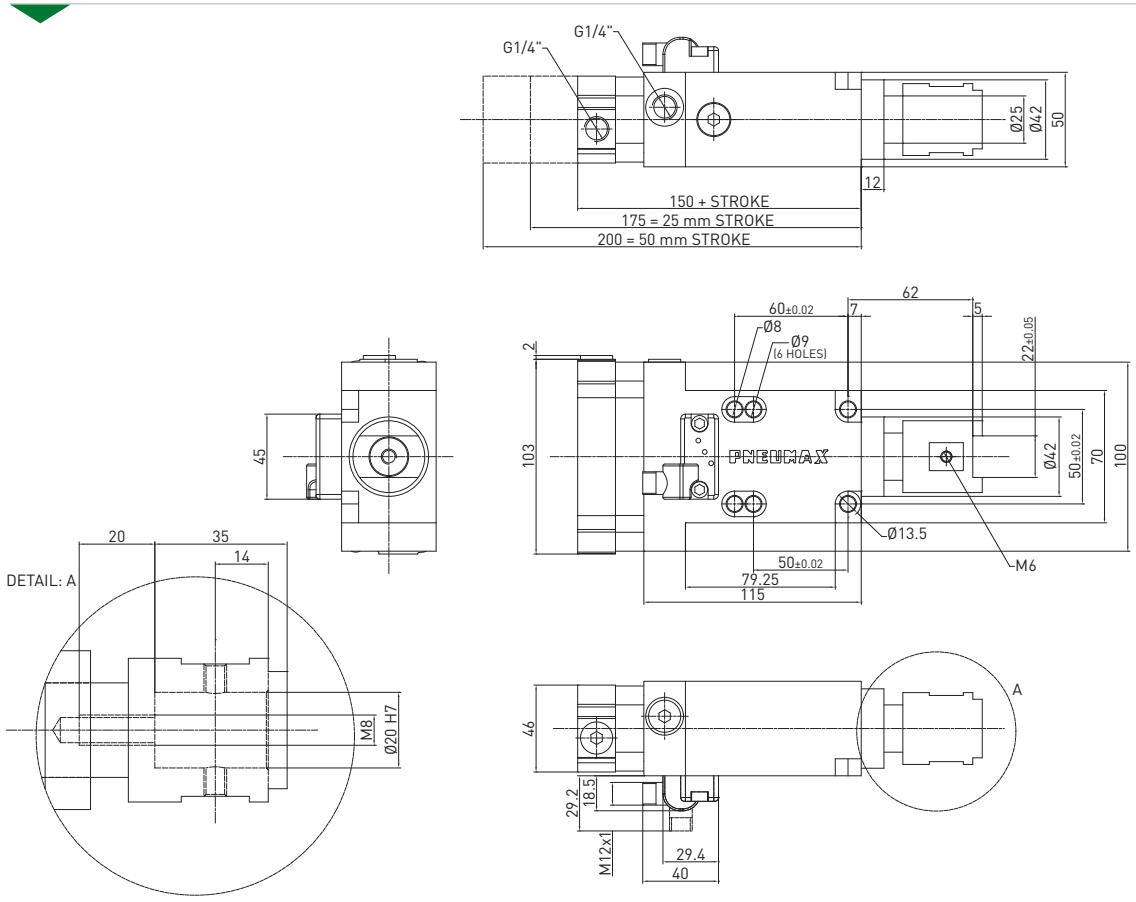

REV. 01 - 22/10/2015

LOCATING

LOCATING

RCD50_ _1 / Retractable locating pin package with CNOMO mounting pattern and manual operation
Size 50 mm - iØ 12 mm rod termination

WEIGHT 1.8 kg
min. stroke version

WEIGHT 1.9 kg
max. stroke version

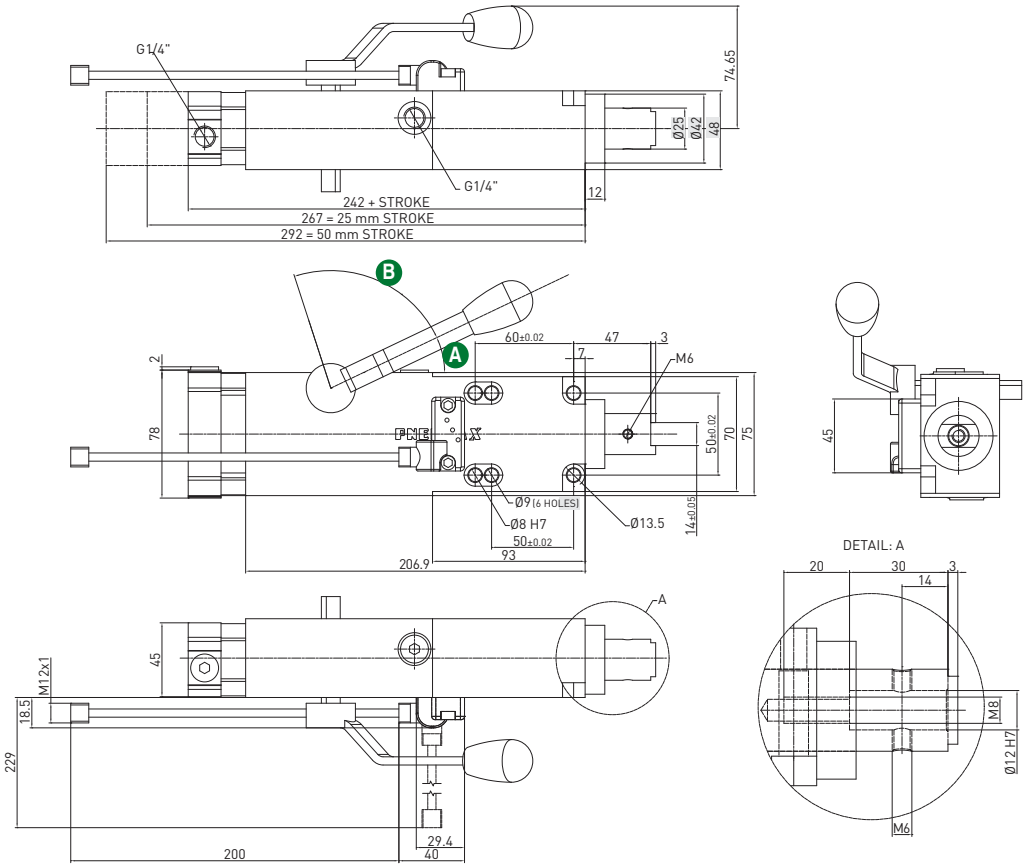

Handle swivel angle

Stroke	A Handle swivel angle	B Handle swivel angle
25	70°	38°
50	25°	83°

Max Hand Force: 200 N

REV. 00 - 31/07/2018

RCD50_ _2 / Retractable locating pin package with CNOMO mounting pattern and manual operation
Size 50 mm - iØ 20 mm rod termination

WEIGHT 2 kg
min. stroke version

WEIGHT 2.1 kg
max. stroke version

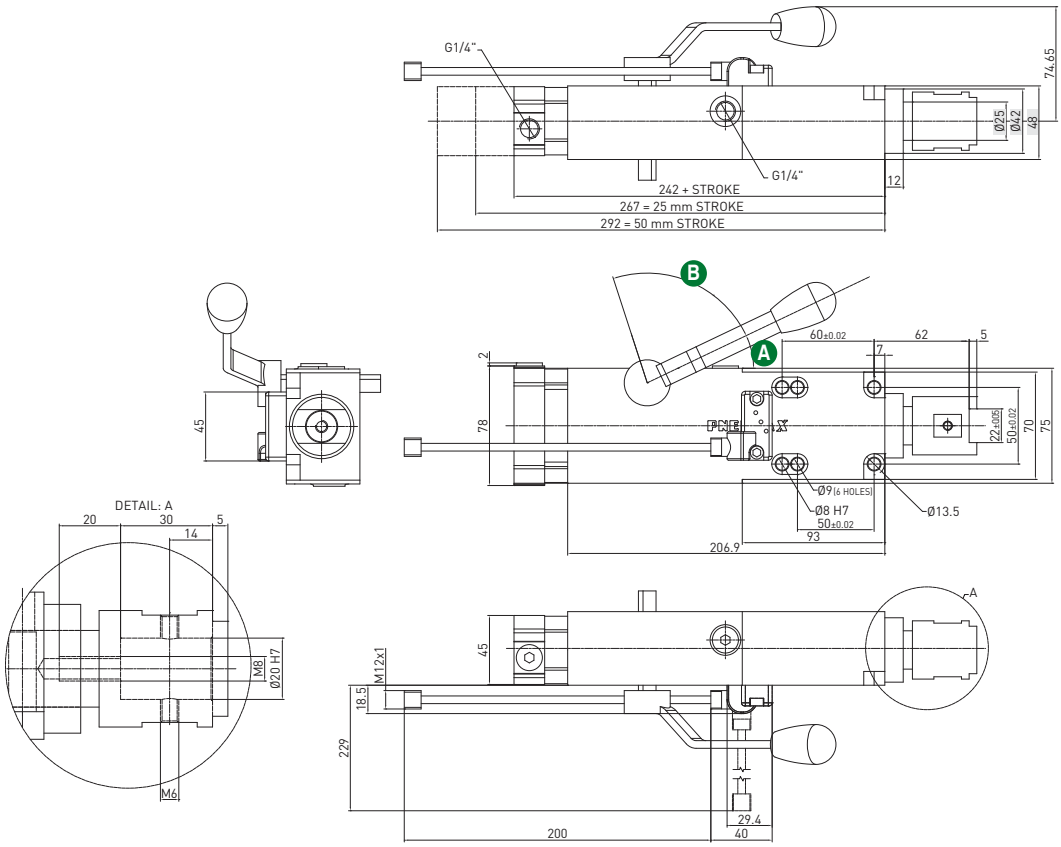

Handle swivel angle

Stroke	A Handle swivel angle	B Handle swivel angle
25	70°	38°
50	25°	83°

Max Hand Force: 200 N

REV. 00 - 31/07/2018

Technical information are provided for informative purpose only and can be subject to change without prior notice

RCD63_ _1 / Retractable locating pin package with CNOMO mounting pattern and manual operation

Size 63 mm - iØ 12 mm rod termination

WEIGHT 2 kg
min. stroke version

WEIGHT 2.1 kg
max. stroke version

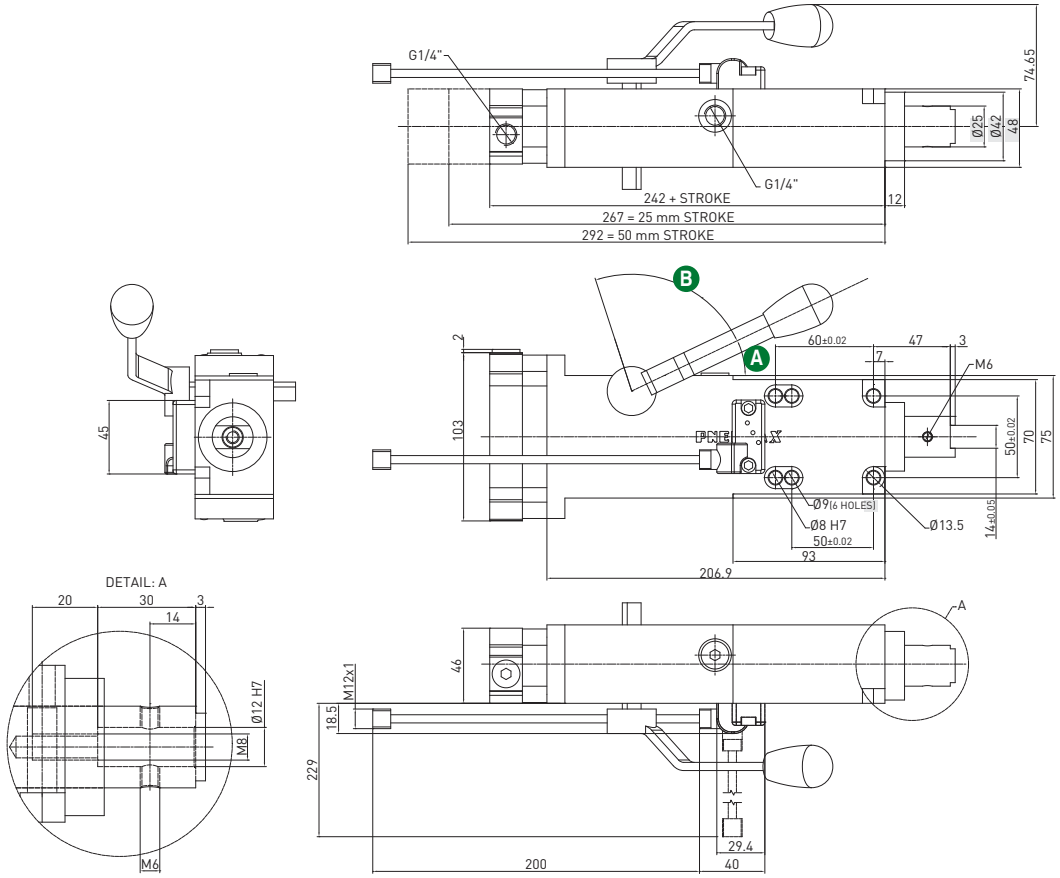

Handle swivel angle

Stroke	A Handle swivel angle	B Handle swivel angle
25	70°	38°
50	25°	83°

Max Hand Force: 200 N

REV. 00 - 31/07/2018

LOCATING

RCD63_ _2 / Retractable locating pin package with CNOMO mounting pattern and manual operation

Size 63 mm - iØ 20 mm rod termination

WEIGHT 2.2 kg
min. stroke version

WEIGHT 2.3 kg
max. stroke version

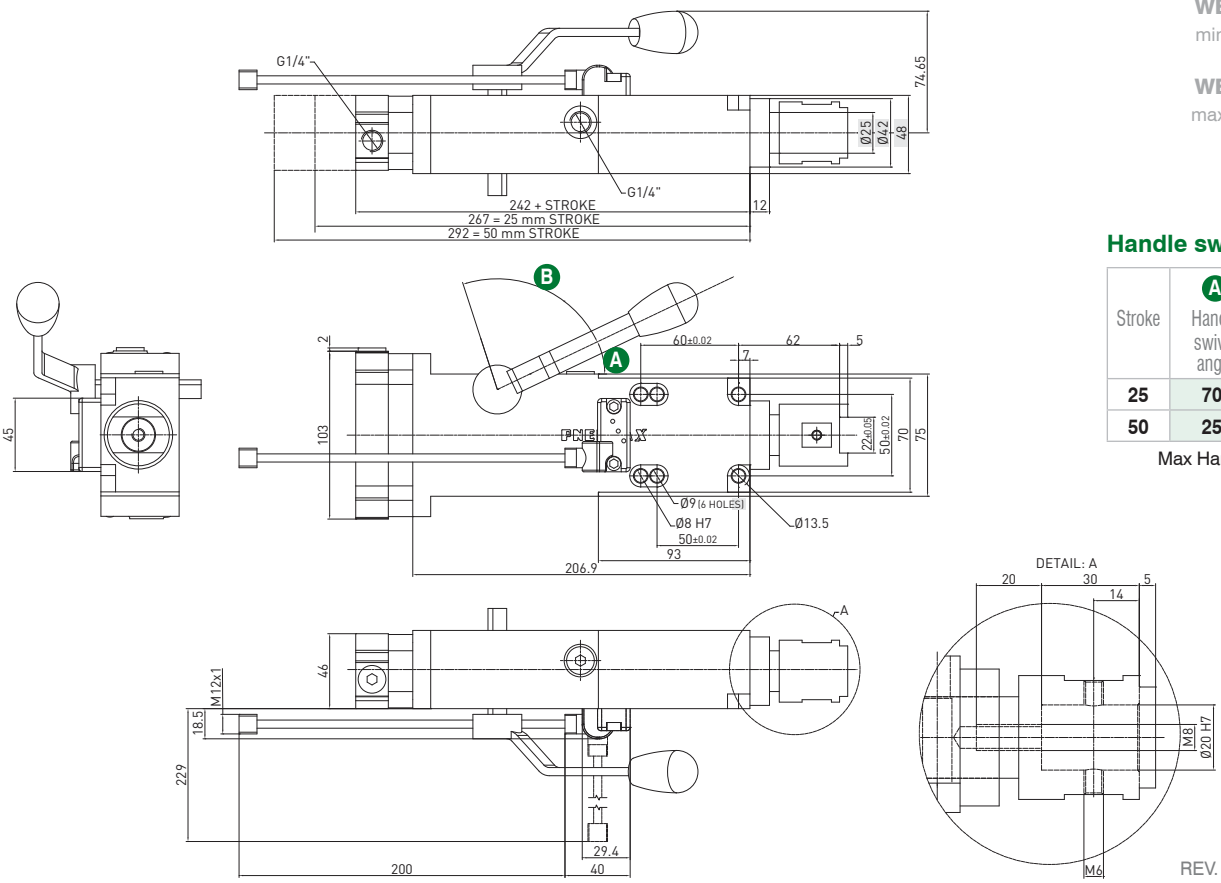

Handle swivel angle

Stroke	A Handle swivel angle	B Handle swivel angle
25	70°	38°
50	25°	83°

Max Hand Force: 200 N

REV. 00 - 31/07/2018

HP-Series

High Performance retractable locating pin package

Technical features

Pneumatic ports on both sides of the cylinder.

Operating features	
Operating pressure	from 2 to 8 bar / from 30 to 115 psi
Lubrication	all the devices are lubricated for life at the factory. Inline air lubrication isn't required

LOCATING

Functional charts

Size 50 mm

- **Max deflection**

Stroke	Load (kg)	Load position A deviation (mm)	Load position B deviation (mm)	Load position C deviation (mm)
60 mm	0.5	0.007	0.012	0.01
	1	0.013	0.025	0.023
	1.5	0.02	0.04	0.036
	2	0.03	0.053	0.049
	2.5	0.038	0.067	0.064
	3	0.045	0.082	0.075
50 mm	0.5	0.006	0.009	0.007
	1	0.013	0.02	0.018
	1.5	0.021	0.032	0.028
	2	0.026	0.047	0.043
	2.5	0.032	0.66	0.057
	3	0.037	0.075	0.068
40 mm	0.5	0.004	0.009	0.004
	1	0.009	0.02	0.009
	1.5	0.013	0.032	0.013
	2	0.018	0.047	0.018
	2.5	0.022	0.66	0.022
	3	0.026	0.075	0.026
25 mm	0.5	0	0.005	0
	1	0.005	0.015	0.005
	1.5	0.007	0.032	0.007
	2	0.011	0.047	0.011
	2.5	0.012	0.66	0.012
	3	0.014	0.075	0.014
15 mm	0.5	0	0.005	0
	1	0.002	0.018	0
	1.5	0.004	0.025	0.002
	2	0.007	0.033	0.006
	2.5	0.012	0.043	0.009
	3	0.014	0.052	0.013

- **Functional data (at 5 bar / 72.5 psi)**

Thrust force	**825 N**
Pull force	**1.960 N**
Max bending moment	**3 N m / 2.21 lb·ft**
Max distance from the load centre to the rod	**200 mm**

- **Cycle time for max stroke**
  < 0.8 s NO flow valve required

- **Air consumption**
  Air consumption for complete cycle
  REV. 00 - 18/06/2015

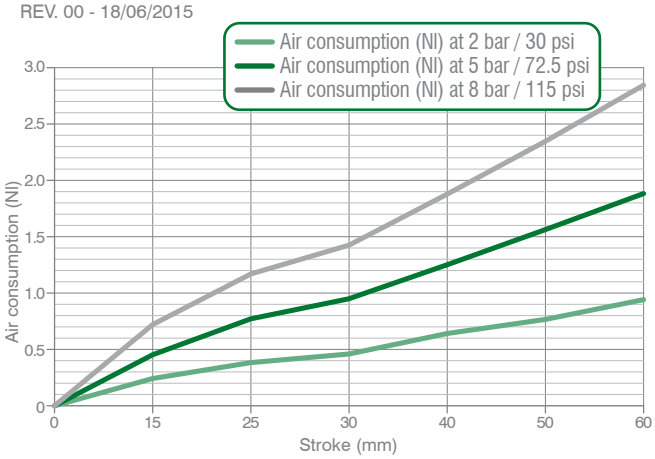

Load position A	Load position B	Load position C
Horizontal mounting position of the retractable locating pin/load centre on the rod	Horizontal mounting position of the retractable locating pin/load centre at 100 mm from the rod axis	Vertical mounting position of the retractable locating pin/load centre at 100 mm from the rod axis

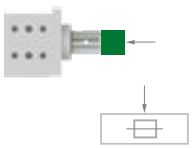

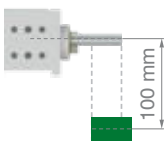

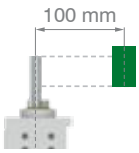

Technical information are provided for informative purpose only and can be subject to change without prior notice

Ordering string

HP-Series

HP	50	E	40	3	G	1

HP	**VERSION**	**HP** = High Performance retractable locating pin package
50	**SIZE**	**50** = Ø 50 mm
E	**SENSOR**	**E** = electronic sensor with M12 swivel connector - PNP **A** = electronic sensor with M12 swivel connector - NPN **N** = no sensor **B** = electronic sensor with M8 swivel connector - PNP
40	**STROKE**	**15** = 15 mm **25** = 25 mm **40** = 40 mm **50** = 50 mm **60** = 60 mm
3	**ROD TERMINATION**	**1** = iØ 16 mm cross-cut key rod termination **2** = iØ 10 mm cross-cut key rod termination **3** = rod termination for offset pins **4** = rod termination with key **5** = iØ 10 mm flat termination **6** = iØ 12 mm flat termination
G	**PORTS**	**G** = G thread – BSPP
1	**ROD ORIENTATION (for termination type 3)**	**1** = **2** = **3** = **4** =

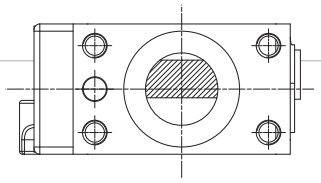

HP50E_1 / **High Performance retractable locating pin package** - Size 50 mm - iØ 16 mm cross-cut key rod termination

WEIGHT 2.2 kg
min. stroke version

WEIGHT 2.5 kg
max. stroke version

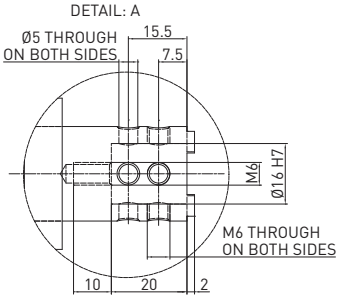

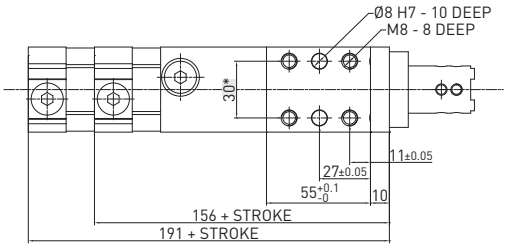

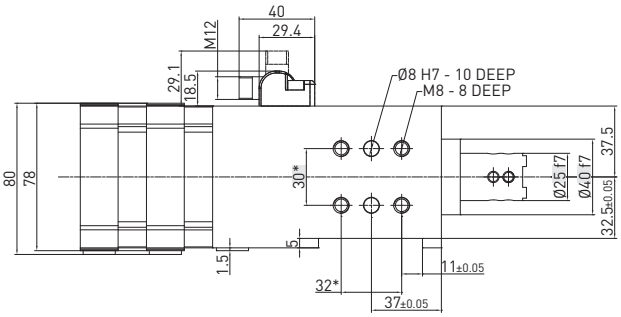

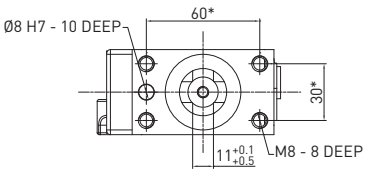

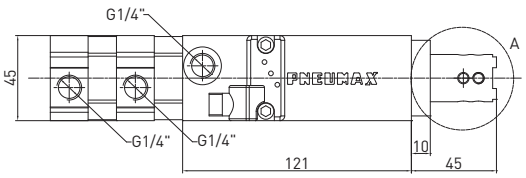

REV. 01 - 26/02/2016

LOCATING

LOCATING

HP50E_2 / High Performance retractable locating pin package - Size 50 mm - iØ 10 mm cross-cut key rod termination

WEIGHT 2.2 kg
min. stroke version

WEIGHT 2.5 kg
max. stroke version

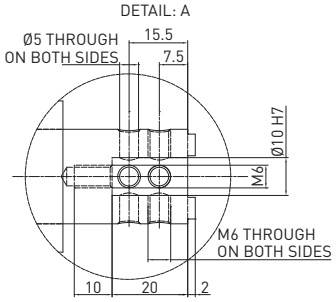

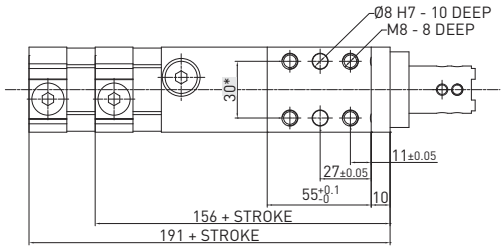

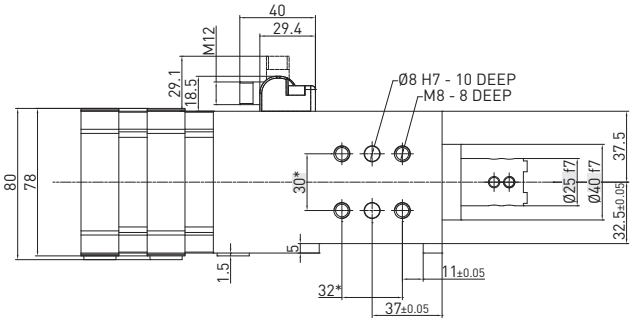

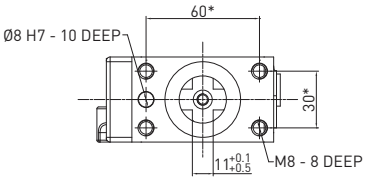

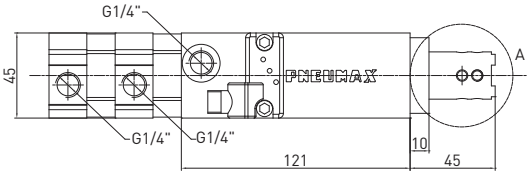

REV. 01 - 26/02/2016

HP50E_3 / High Performance retractable locating pin package - Size 50 mm - Rod termination for offset pins

WEIGHT 2.2 kg
min. stroke version

WEIGHT 2.5 kg
max. stroke version

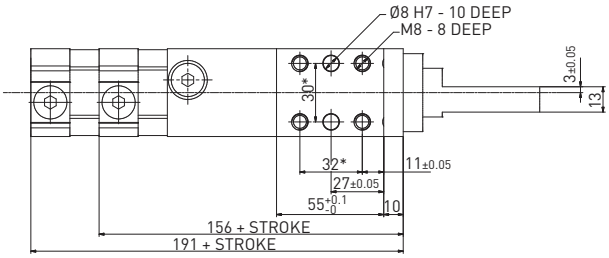

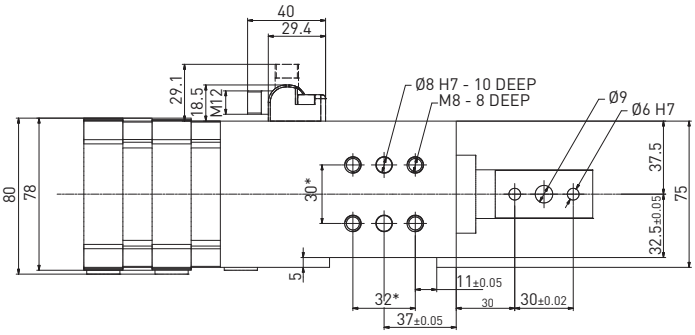

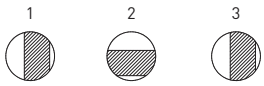

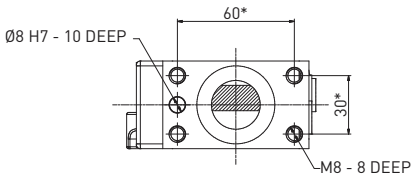

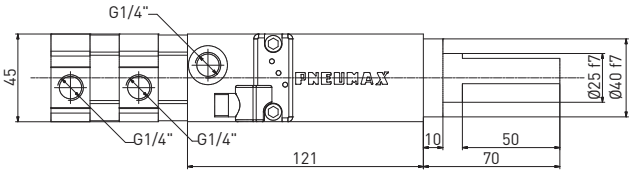

REV. 00 - 12/05/2015

Technical information are provided for informative purpose only and can be subject to change without prior notice

HP50E_4 / **High Performance retractable locating pin package** - Size 50 mm - Rod termination with key

WEIGHT 2.2 kg
min. stroke version

WEIGHT 2.5 kg
max. stroke version

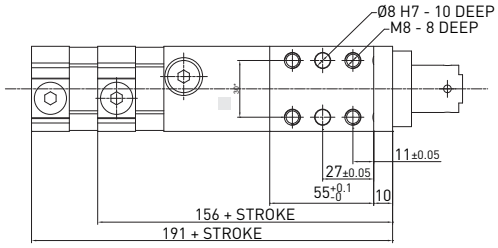

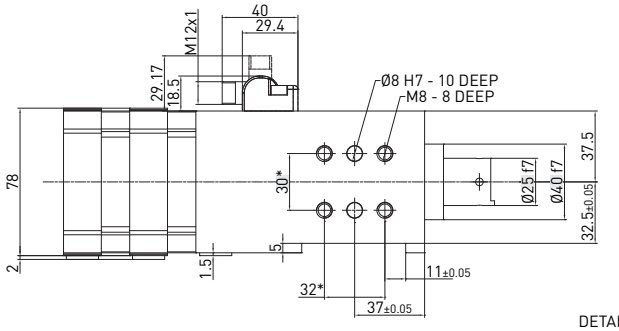

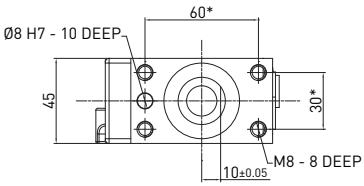

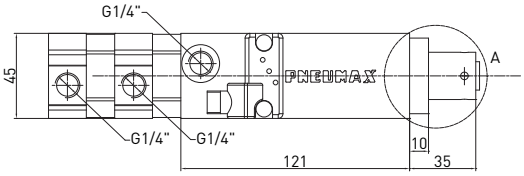

DETAIL: A

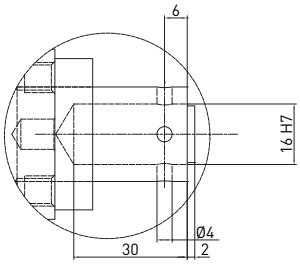

REV. 00 - 31/03/2015

LOCATING

F-Series

Retractable locating pin packages with dual rods

Technical features

Pneumatic ports on both sides of the cylinder.

Operating features	
Operating pressure	from 2 to 8 bar / from 30 to 115 psi
Lubrication	all the devices are lubricated for life at the factory. Inline air lubrication isn't required

LOCATING

Functional charts

Size 40-41 mm

- **Max deflection**

Stroke	Load (kg)	Load position A deviation (mm)	Load position B deviation (mm)	Load position C deviation (mm)
40 mm	0.5	0.004	0.021	0.003
	1	0.01	0.05	0.01
	1.5	0.015	0.08	0.019
	2	0.022	0.122	0.028
	2.5	0.03	0.158	0.037
	3	0.035	0.195	0.046
20 mm	0.5	0.004	0.013	0.005
	1	0.009	0.035	0.008
	1.5	0.013	0.053	0.011
	2	0.017	0.083	0.017
	2.5	0.021	0.107	0.021
	3	0.026	0.13	0.025

- **Functional data (at 5 bar / 72.5 psi)**

Thrust force	430 N
Pull force	630 N
Max bending moment	3 N m / 2.21 lb·ft
Max distance from the load centre to the rod	200 mm

- **Cycle time for max stroke**
  < 0.8 s NO flow valve required

- **Air consumption**
  Air consumption for complete cycle
  REV. 00 - 18/06/2015

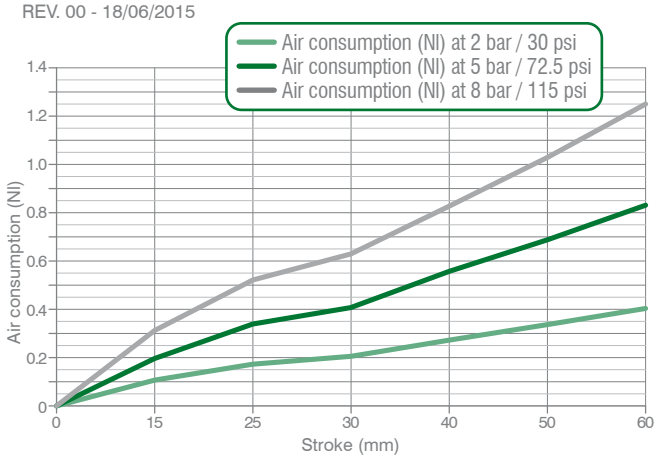

Load position A

Horizontal mounting position of the retractable locating pin/load centre on the rod

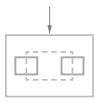

Load position B

Horizontal mounting position of the retractable locating pin/load centre at 100 mm from the rod axis

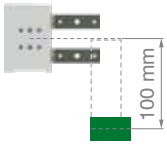

Load position C

Vertical mounting position of the retractable locating pin/load centre at 100 mm from the rod axis

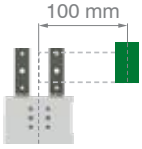

Technical information are provided for informative purpose only and can be subject to change without prior notice

Size 63 mm

• Max deflection

Stroke	Load (kg)	Load position A deviation (mm)	Load position B deviation (mm)	Load position C deviation (mm)
60 mm	0.5	0.003	0.009	0
	1	0.007	0.026	0.001
	1.5	0.013	0.043	0.007
	2	0.017	0.063	0.009
	2.5	0.022	0.085	0.018
	3	0.026	0.109	0.023
	3.5	0.031	0.129	0.033
	4	0.036	0.148	0.042

• Air consumption

Air consumption for complete cycle

REV. 00 - 18/06/2015

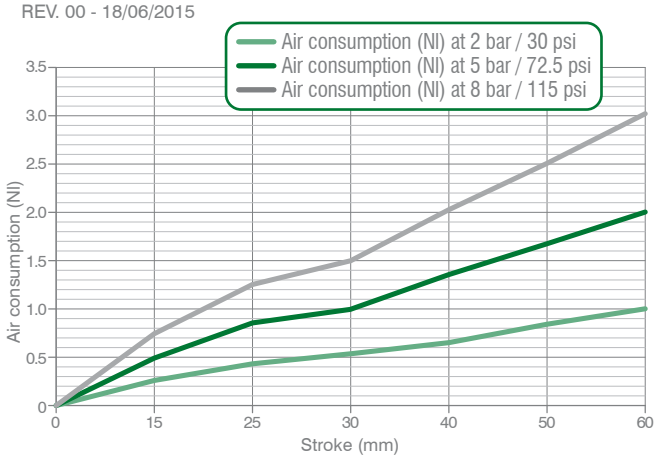

• Functional data (at 5 bar / 72.5 psi)

Thrust force	430 N
Pull force	630 N
Max bending moment	3 N m / 2.21 lb·ft
Max distance from the load centre to the rod	200 mm

Load position A	Load position B	Load position C
Horizontal mounting position of the retractable locating pin/load centre on the rod	Horizontal mounting position of the retractable locating pin/load centre at 100 mm from the rod axis	Vertical mounting position of the retractable locating pin/load centre at 100 mm from the rod axis

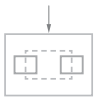

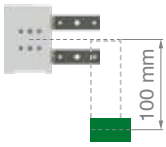

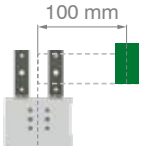

• Cycle time for max stroke

< 0.8 s NO flow valve required

Ordering string

F-Series 40-41

F | P | 40 | E | 20 | 3 | G

F	VERSION	**F** = Retractable locating pin package with dual rod
P	OPERATION	**P** = pneumatic
40	SIZE	**40** = Ø 40 mm mounting pattern 35x25 mm **41** = Ø 40 mm mounting pattern 30x25 mm
E	SENSOR	**E** = electronic sensor with M12 swivel connector - PNP **A** = electronic sensor with M12 swivel connector - NPN **N** = no sensor **B** = electronic sensor with M8 swivel connector - PNP
20	STROKE	**20** = 20 mm **40** = 40 mm
3	ROD TERMINATION	**1** = rod termination type 3 with improved radius **2** = rod termination type 7 with improved radius **3** = rod termination for offset pins **7** = rod termination for offset pins – with 2 dowel holes (see datasheet)
G	PORTS	**G** = G thread – BSPP

Ordering string

F-Series 63

F	P	63	E	60	3	G

F	**VERSION**	**F** = Retractable locating pin package with dual rod
P	**OPERATION**	**P** = pneumatic **D2** = pneumtic with manul operation
63	**SIZE**	**63** = Ø 63 mm
E	**SENSOR**	**E** = electronic sensor with M12 swivel connector - PNP **A** = electronic sensor with M12 swivel connector - NPN **N** = no sensor **B** = electronic sensor with M8 swivel connector - PNP
60	**STROKE**	**15** = 15 mm **25** = 25 mm **40** = 40 mm **50** = 50 mm **60** = 60 mm
3	**ROD TERMINATION**	**1** = rod termination type 3 with improved radius **3** = rod termination for offset pins
G	**PORTS**	**G** = G thread – BSPP

Technical information are provided for informative purpose only and can be subject to change without prior notice

FP40E__1/2/3/7 / Retractable locating pin package with dual rod - Size 40 mm
Mounting pattern 35x25 mm - Rod termination for offset pins

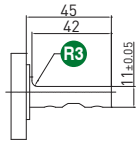

Rod termination type 1

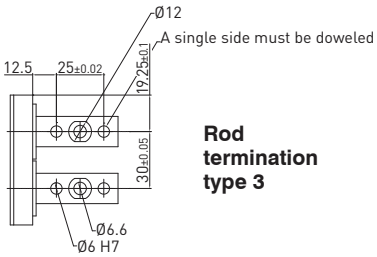

Rod termination type 3

WEIGHT 1.1 kg
min. stroke version

WEIGHT 1.25 kg
max. stroke version

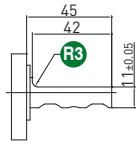

Rod termination type 2

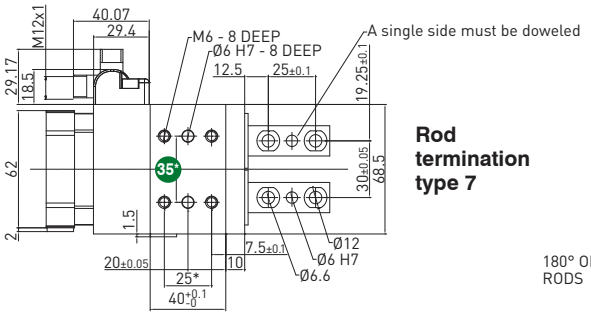

Rod termination type 7

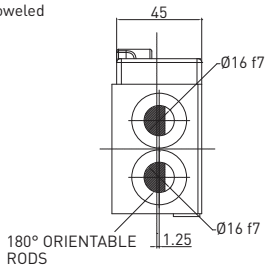

With improved radius for demanding applications

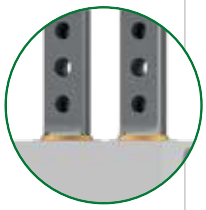

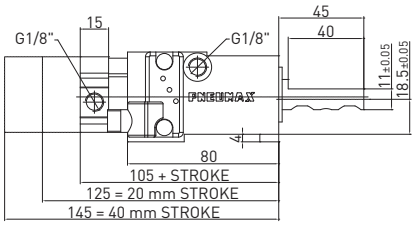

* DIMENSIONAL TOLERANCE FOR DOWEL HOLES: ±0.02

DIMENSIONAL TOLERANCE FOR THREADED HOLES: ±0.1

REV. 02 - 28/06/2018

LOCATING

FP41E__1/2/3/7 / Retractable locating pin package with dual rod - Size 41 mm
Mounting pattern 30x32 mm - Rod termination for offset pins

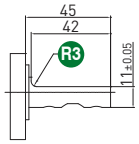

Rod termination type 1

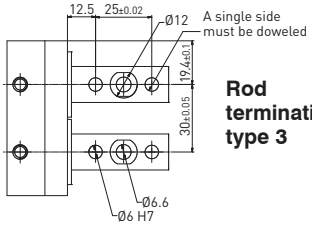

Rod termination type 3

WEIGHT 1.1 kg
min. stroke version

WEIGHT 1.25 kg
max. stroke version

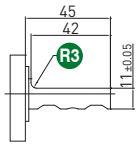

Rod termination type 2

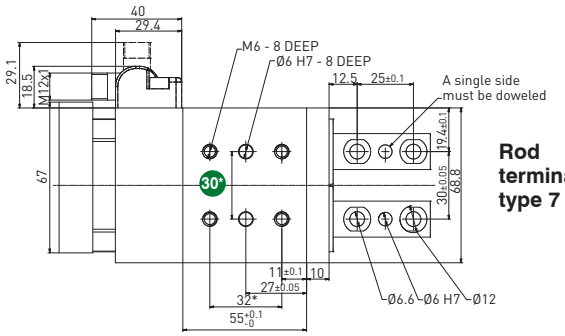

Rod termination type 7

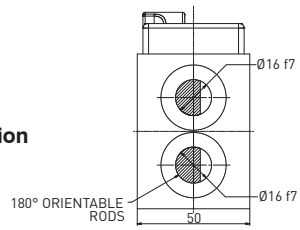

With improved radius for demanding applications

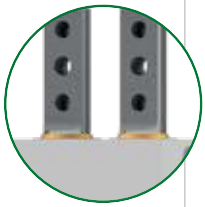

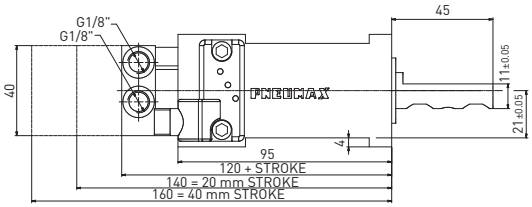

* DIMENSIONAL TOLERANCE FOR DOWEL HOLES: ±0.02

DIMENSIONAL TOLERANCE FOR THREADED HOLES: ±0.1

REV. 02 20/11/2020

LOCATING

FP63E__1/3 / Retractable locating pin package with dual rod - Size 63 mm - Rod termination for offset pins

WEIGHT 3.35 kg
min. stroke version

WEIGHT 3.65 kg
max. stroke version

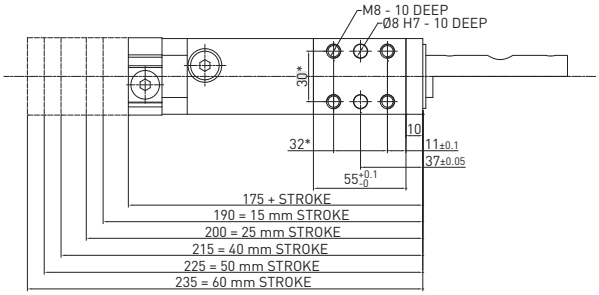

With improved radius for demanding applications

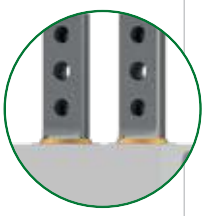

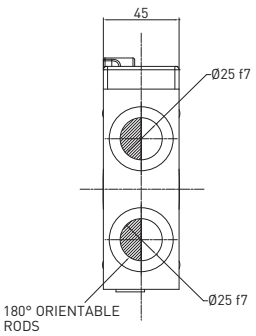

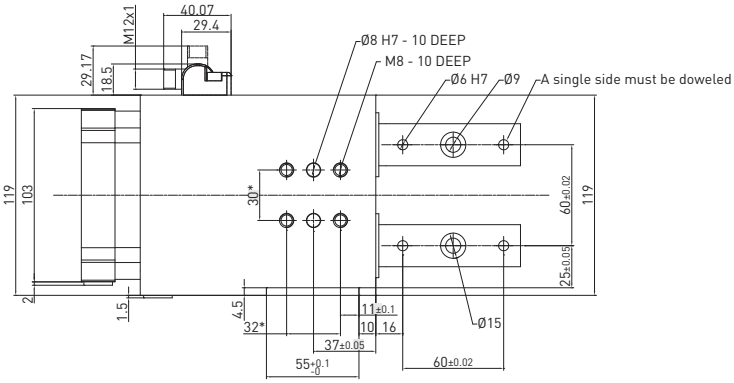

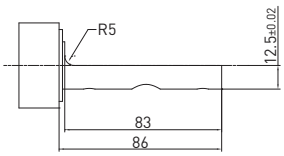

Rod termination 1

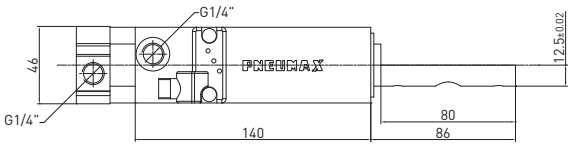

Rod termination 3

* DIMENSIONAL TOLERANCE FOR DOWEL HOLES: ±0.02

DIMENSIONAL TOLERANCE FOR THREADED HOLES: ±0.1

REV. 01 - 10/04/2017

Technical information are provided for informative purpose only and can be subject to change without prior notice

FD263E_ _ 1/3 / Retractable locating pin package with dual rod - Size 63 mm - Rod termination for offset pins

WEIGHT 1.1 kg
min. stroke version

WEIGHT 1.25 kg
max. stroke version

Max Hand Force: 200 N

With improved radius for demanding applications

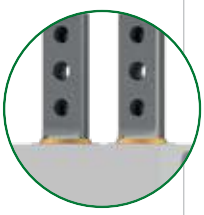

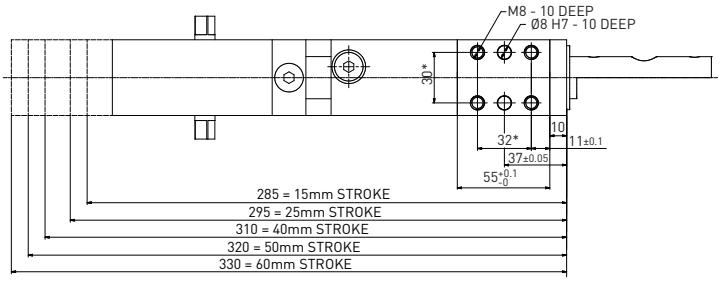

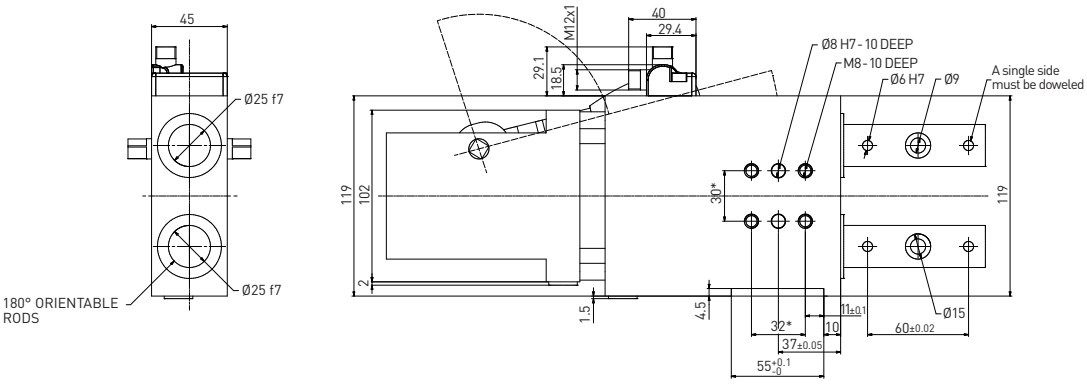

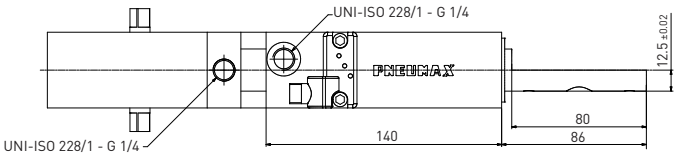

* DIMENSIONAL TOLERANCE FOR DOWEL HOLES: ±0.02

DIMENSIONAL TOLERANCE FOR THREADED HOLES: ±0.1

REV. 00 - 02/04/2020

LOCATING

FT-Series

Retractable locating pin packages with dual rods and toggle linkage

- **Fully encapsulated toggle mechanism: in case of air loss, the working position remains secure**
- **Manual unlock mechanism to disengage the linkage in emergency situations**
- **Position repeatability ± 0.05 mm**
- **Clear design with user-friendly surfaces and no dirt or welding deposit traps**

LOCATING

Technical features

Pneumatic ports on both sides of the cylinder.	
Operating features	
Operating pressure	from 2 to 8 bar / from 30 to 115 psi
Lubrication	all the devices are lubricated for life at the factory. Inline air lubrication isn't required

Functional charts

Size 50 mm

- **Max deflection**

Stroke	Load (kg)	Load position B deviation (mm)	Load position C deviation (mm)
40 mm	0.5	0.001	0.002
	1	0.001	0.002
	1.5	0.001	0.002
	2	0.001	0.002
	2.5	0.001	0.004
	3	0.001	0.004
	3.5	0.002	0.004
	4	0.002	0.004

- **Cycle time for max stroke**
  < 0.8 s NO flow valve required

- **Air consumption**
  Air consumption for complete cycle
  REV. 00 - 18/06/2015

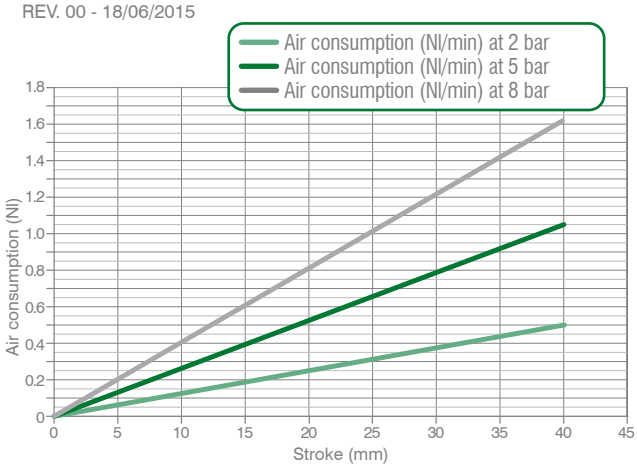

- **Functional data (at 5 bar / 72.5 psi)**

Thrust force	**4900 N**
Max distance from the load centre to the rod	**200 mm**

Load position B	Load position C
Horizontal mounting position of the retractable locating pin/load centre at 100 mm from the rod axis	Vertical mounting position of the retractable locating pin/load centre at 100 mm from the rod axis

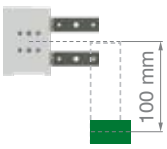

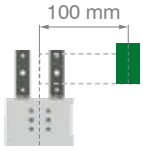

Technical information are provided for informative purpose only and can be subject to change without prior notice

FT-Series / Ordering string

FT_50-series

F	T	50	E	40	G	5	2

F	**VERSION**	**F** = Retractable locating pin packages with dual rods
T	**OPERATION**	**T** = pneumatic with toggle lock **TD** = pneumtic with manul operation and toggle lock
50	**SIZE**	**50** = Ø 50 mm
E	**SENSOR**	**E** = electronic sensor with M12 swivel connector - PNP
40	**STROKE**	**40** = 40 mm
G	**PORTS**	**G** = G thread – BSPP
3	**ROD TERMINATION**	**3** = Mounting surface on the rods corresponds to the pin package axis **5** = 2.5 mm out of the axis mounting surface
2	**ROD ORIENTATION**	**2** = **4** =

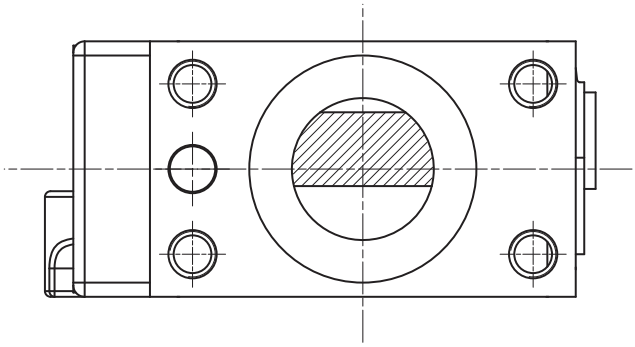

LOCATING

LOCATING

FT50E40G3_ / **Retractable locating pin package with dual rods and toggle linkage** - Size 50 mm

Rod termination 3 – in line to the pin package axis

WEIGHT 7 kg

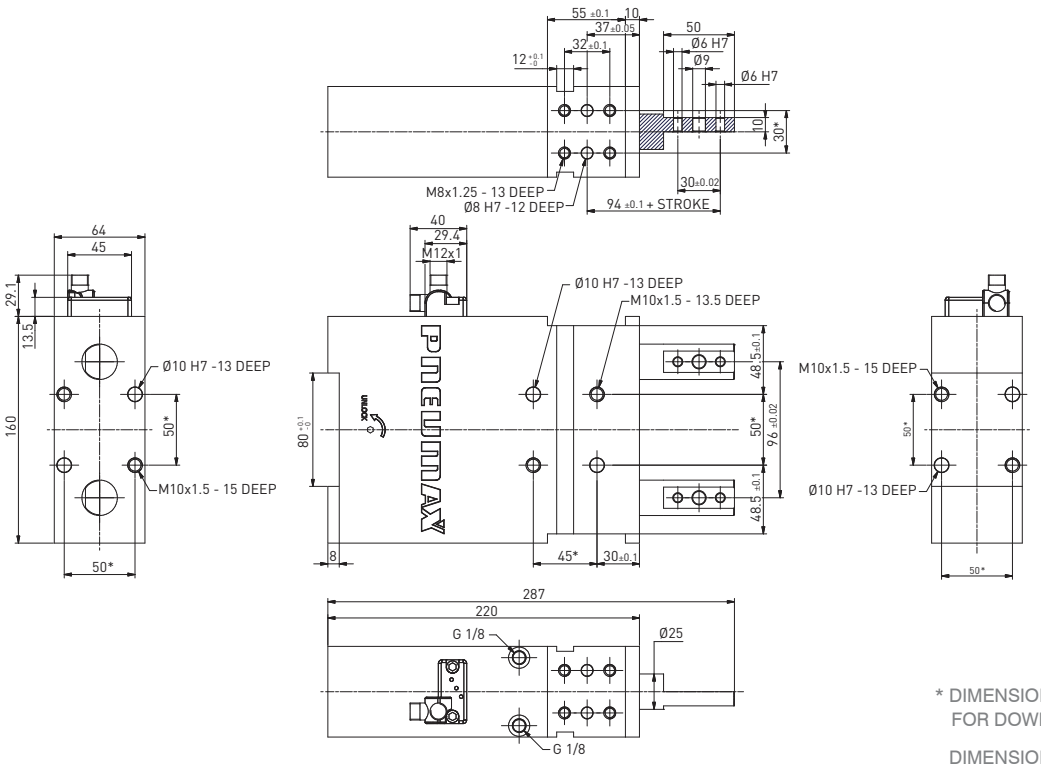

* DIMENSIONAL TOLERANCE FOR DOWEL HOLES: ±0.02

DIMENSIONAL TOLERANCE FOR THREADED HOLES: ±0.1

REV. 01 - 27/04/2021

FT50E40G5_ / **Retractable locating pin package with dual rods and toggle linkage** - Size 50 mm

Rod termination 5 – 2.5 mm out of axis mounting surface

WEIGHT 7 kg

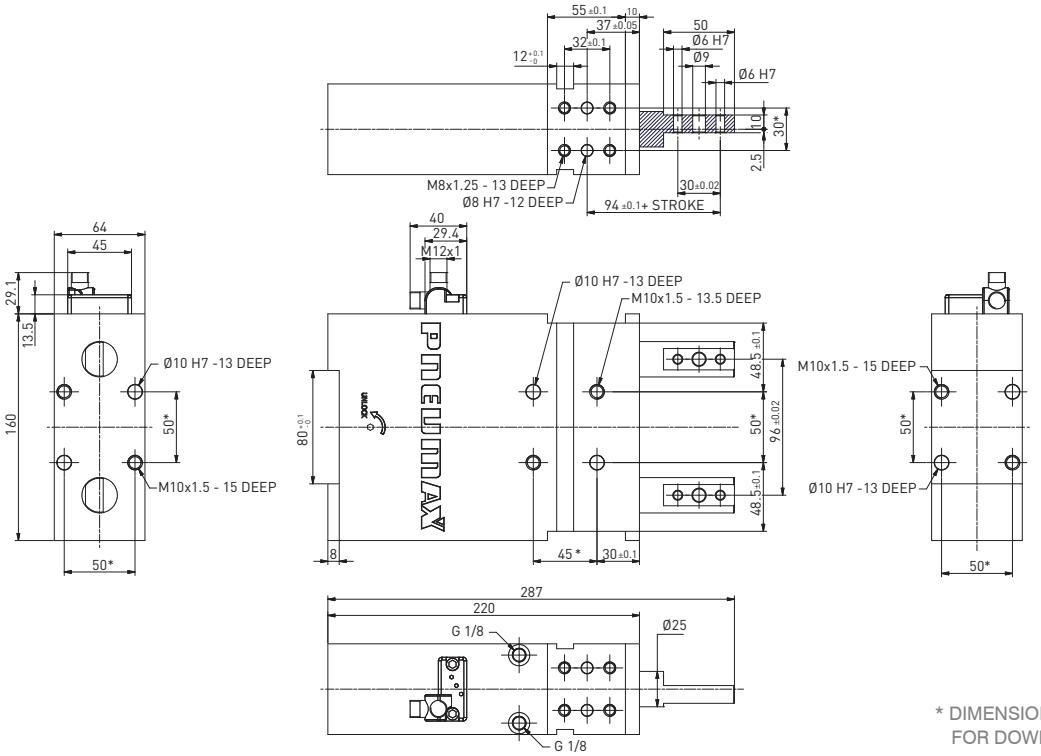

* DIMENSIONAL TOLERANCE FOR DOWEL HOLES: ±0.02

DIMENSIONAL TOLERANCE FOR THREADED HOLES: ±0.1

REV. 01 - 27/04/2021

Technical information are provided for informative purpose only and can be subject to change without prior notice

FTD50E40G3_ / **Retractable locating pin package with dual rods and toggle linkage and manual operation** - Size 50 mm
Rod termination 3 – in line to the pin package axis

WEIGHT 7,5 KG
Handle included

Max Hand Force: 200 N

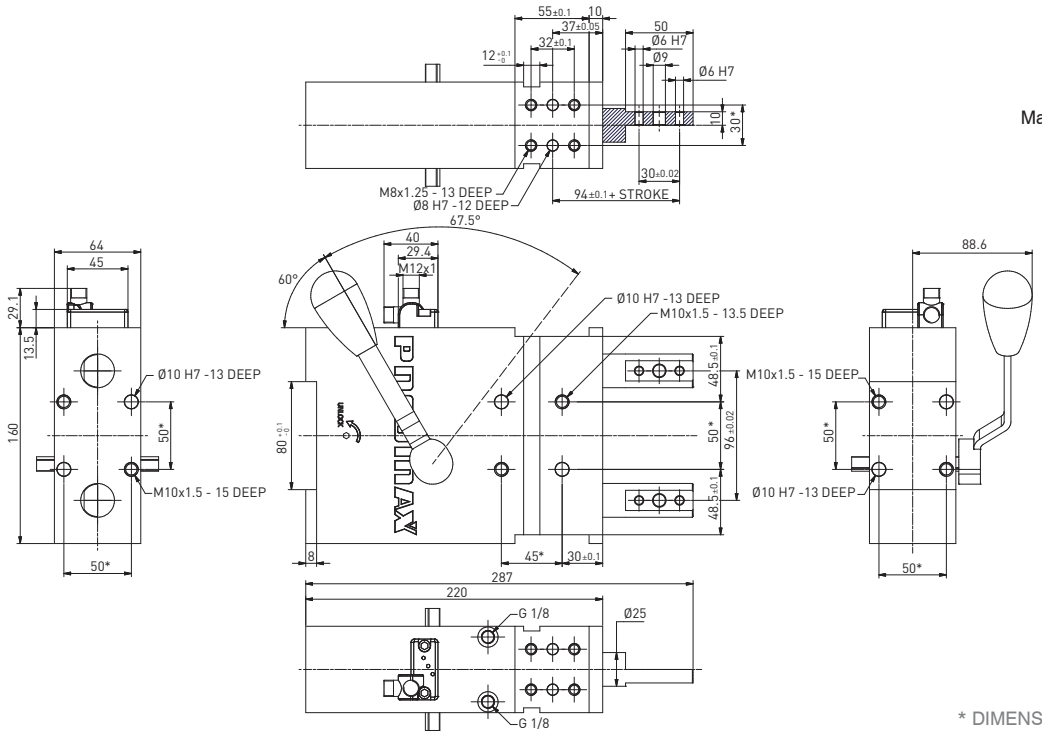

* DIMENSIONAL TOLERANCE
FOR DOWEL HOLES: ±0.02

DIMENSIONAL TOLERANCE
FOR THREADED HOLES: ±0.1

REV. 01 - 27/04/2021

FTD50E40G5_ / **Retractable locating pin package with dual rods and toggle linkage and manual operation** - Size 50 mm
Rod termination 5 – 2.5 mm out of axis mounting surface

WEIGHT 7,5 KG
Handle included

Max Hand Force: 200 N

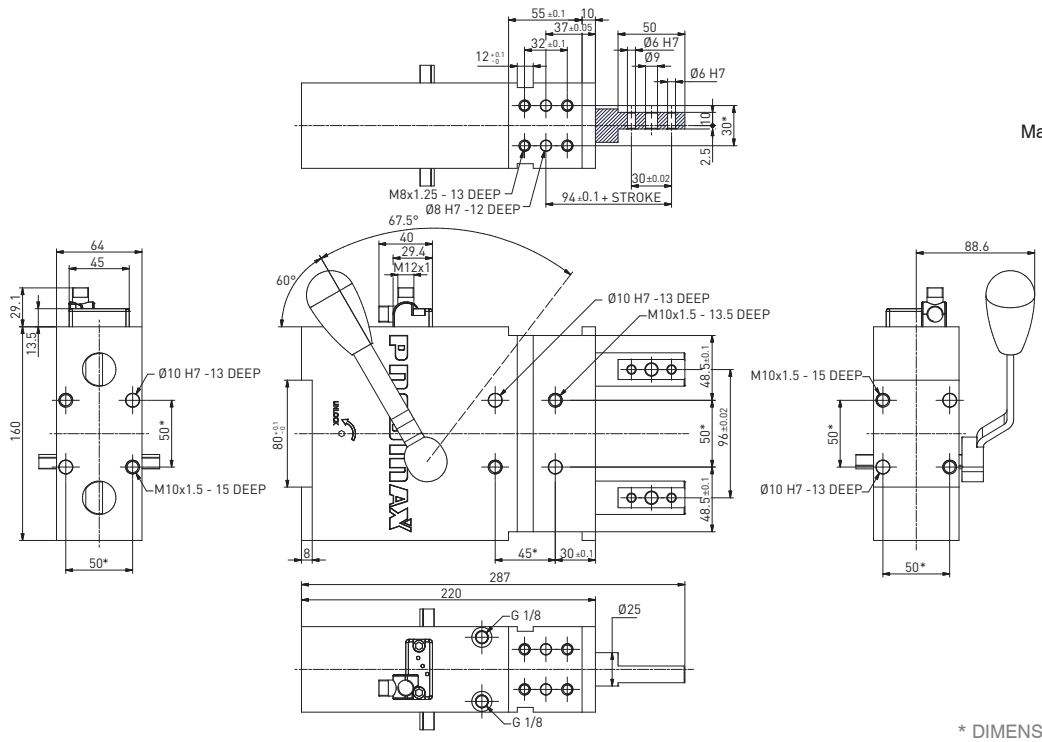

* DIMENSIONAL TOLERANCE
FOR DOWEL HOLES: ±0.02

DIMENSIONAL TOLERANCE
FOR THREADED HOLES: ±0.1

REV. 01 - 27/04/2021

QIG_L_EN Rev.00 09.2015

Locating

Quick installation guide

Caution

Any maintenance operation may only be carried out by qualified and authorized personnel. For any reason, do not reach into the pivoting range of the clamping arms, when the clamps are in operation. Disconnect and lock out pneumatic and electric supply lines before operating on or around clamps.

A worksheet for the right sizing of the pin packages is available upon request. Visit our website for technical documents

http://automotive.pneumax.it/

Pressure operating range: from 2 to 8 bar/ from 30 to 115 psi. Inline lubrication isn't required: if lubricated air is used, it is necessary to continue using lubricated air, as the oil in it may have removed the basic lubrication in the device.

Functional description

Retractable locating pin packages

When operated, the cylinder **extends and retracts the rod**.
Anti-rotation mechanism. A dual piston rod guiding grants positional **accuracy and repeatability**.

Retractable locating pin packages with CNOMO mounting pattern

When operated, the cylinder **extends and retracts the rod**.
Anti-rotation mechanism.
A dual piston rod guiding grants positional **accuracy and repeatability**. Please refer to the catalogue for the deviation values for different strokes and load.

High Performance retractable locating pin packages

Pneumatic tandem pin package with **large output force**. Pressure is applied to both pistons resulting in an approximately doubled piston output force of a corresponding piston diameter. Appreciable **saving in bulk** and weight due to the all-aluminium housing, which comprises the head cap. **Anti-rotation** mechanism. A dual piston rod guiding grants positional **accuracy and repeatability**.

Retractable locating pin packages with dual rods

When operated, the cylinder **extends and retracts the rods**, which could be **rotated by 180°**, thus achieving a **symmetrical rod orientation**. A dual piston rod guiding grants positional **accuracy and repeatability**. Make sure that the rods are doweled only on a single side to avoid any misalignment.
Please refer to the catalogue for the deviation values for different strokes and load.

Technical information are provided for informative purpose only and can be subject to change without prior notice

The clamp is warranted for 3 mln cycles in correct operating conditions

No lubrication.
No preventive maintenance.
The pin packages do not require any specific adjustment.
The rod alignment as well as the anti-rotation are set in the manufacturing department and do not require any adjustment on-site.
External cleaning with non-corrosive detergents is required: cleaning interval depends on the ambient conditions as well as on the frequency of use.

Pin package installation to the tool

The pin package can be installed by one of its three mounting surfaces, using dowels and screws according to its datasheet. The tightening torques to be set are:

M6 10 N m / 7.37 lb·ft
M8 25 N m / 18.43 lb·ft

Use the key support surfaces, where available.
Always use all the bores on the mounting pattern.

Electronic sensor

ES001 is used for all pin packages' sizes and series. Stepless adjustment of the connector: unscrew the tightening screw and set the connector in the required position, then secure the screw with 5 N m / 3.68 lb·ft.

Technical features	
Operating voltage	**10-30 VDC**
Voltage drop	**≤ 2 V**
Load current	**≤ 100 mA**
Current consumption	**≤ 25 mA**
Short-circuit protection	**protected**
Protection rating	**IP68**
Operating temperature	**–0 °C +50 °C**
Storage temperature	**–25 °C +60 °C**
Electromagnetic compatibility	**EN 60947-5-2:2007 + A1:2012**
Power supply indication	**green LED**
Open position indication	**yellow LED**
Closed position indication	**red LED**

To replace the sensor, remove the M5 screw and assemble a new one by tightening the same screw with 5 N m / 3.68 lb·ft.

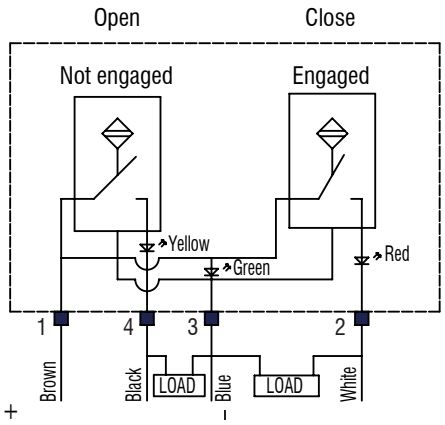

Semplified diagram (PNP)

Handling

Pneumatic gripper clamps with fully adjustment opening angle

Quick set-up

No flow valve required

HANDLING

Toggle-joint mechanism

Compact gripper clamps with toggle-joint mechanism, to secure the workpiece clamping in case of air loss: the jaws remain locked in closed position.
Mainly used to **hold the workpiece on edges or through holes – from above or below – and to transfer parts**.

The shortest set-up time in the market

Easy field adjustment of the opening angle, from the rear or front side of the gripper clamp with the shortest set-up time in the market.

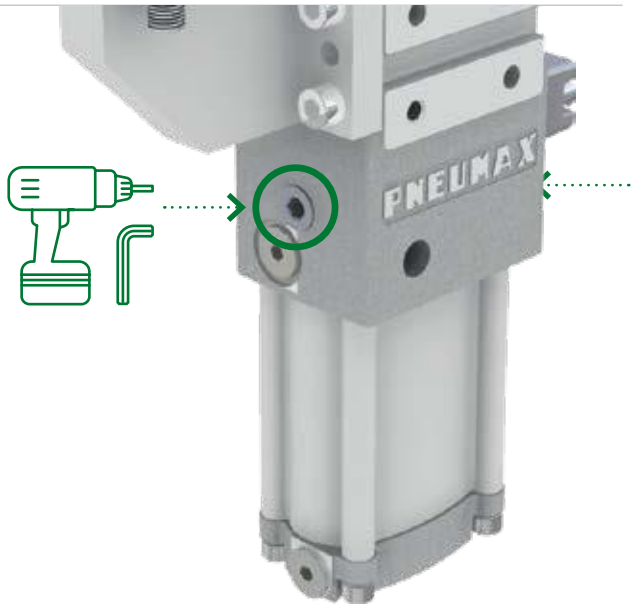

Technical information are provided for informative purpose only and can be subject to change without prior notice

Handling products

J-Series

Complete reliability of the angle adjustment over time integrated mechanism secures the adjusted position and prevents any sliding or opening angle displacement.
A **retain mechanism** secures the **adjustment tool in its seat** and prevents the Allen wrench to fall down during the adjustment procedure.
Even without air, the clamp can be toggle-locked through the adjustment means.

Sealed roller bearings

Lightweight design, which does not compromise the stiffness and strength of the housings.
Equipped with sealed roller bearings, to ensure a high protection degree against contaminants **> fully encapsulated housing**.

No flow valve required

No slamming towards the opening position due to an optimal integrated cushioning system.

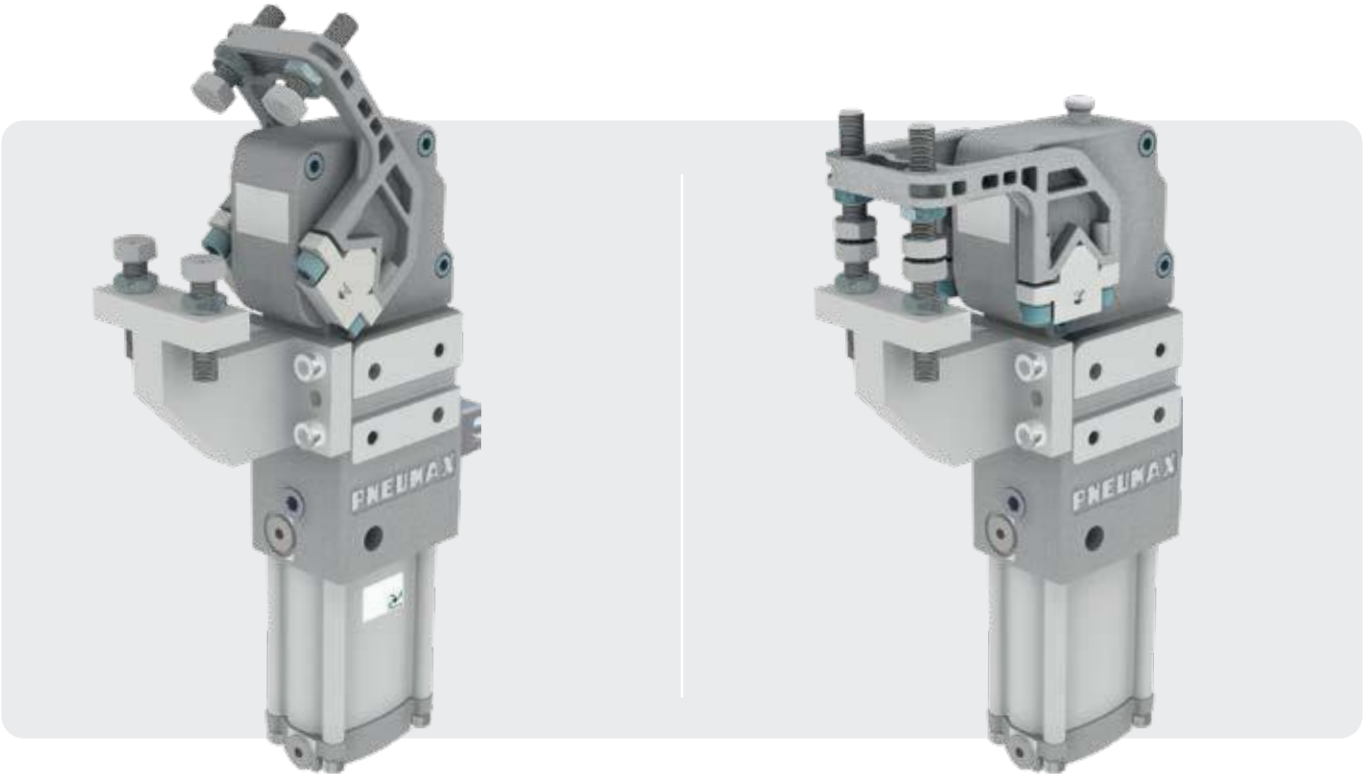

J-Series

Pneumatic gripper clamps

Technical features

Manual release button to open the linkage when air pressure is removed during setup. **Pneumatic ports on both sides** of the cylinder.

Operating features	
Operating pressure	from 2 to 8 bar / from 30 to 115 psi
Lubrication	all the devices are lubricated for life at the factory. Inline air lubrication isn't required

HANDLING

Functional charts

Size 40 mm

- **Cycle time for max opening angle**
  < 0.8 s NO flow valve required
- **Clamping moment (at 5 bar / 72.5 psi)**
  50 N m / 36,87 lb·ft
- **Holding moment**
  75 N m / 55,31 lb·ft

The above data are meant for correct working conditions of the clamp with the same performance level during its life time. For applications which exceed the above data, please contact our sales representatives.

- **Air consumption** / Complete cycle (opening and closing)

REV. 00 - 17/06/2015

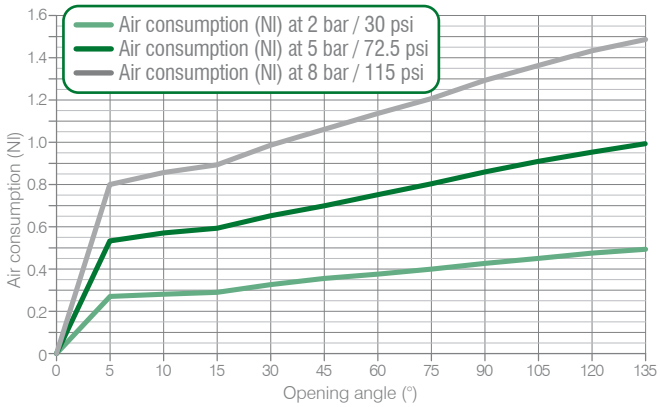

Ordering string

J-Series

J P 40 E G 1 2 A

J	VERSION	**J** = Retractable locating pin package with dual rod
P	OPERATION	**P** = pneumatic **D** = pneumatic with manual operation **1** = **2** =
40	SIZE	**40** = Ø 40 mm
E	SENSOR	**E** = electronic sensor with M12 swivel connector - PNP **A** = electronic sensor with M12 swivel connector - NPN **N** = no sensor **B** = electronic sensor with M8 swivel connector - PNP
G	PORTS	**G** = G thread – BSPP
1	ARM MOVEMENT	**1** = upper jaw
2	CLAMP ARM TYPE	**2** = 2 pairs of knurled tips (not included in the scope of the supply)
A	ARM MATERIAL	**A** = aluminum **S** = steel

Technical information are provided for informative purpose only and can be subject to change without prior notice

JP40E / Gripper clamp - Size 40 mm

WEIGHT 1.9 kg

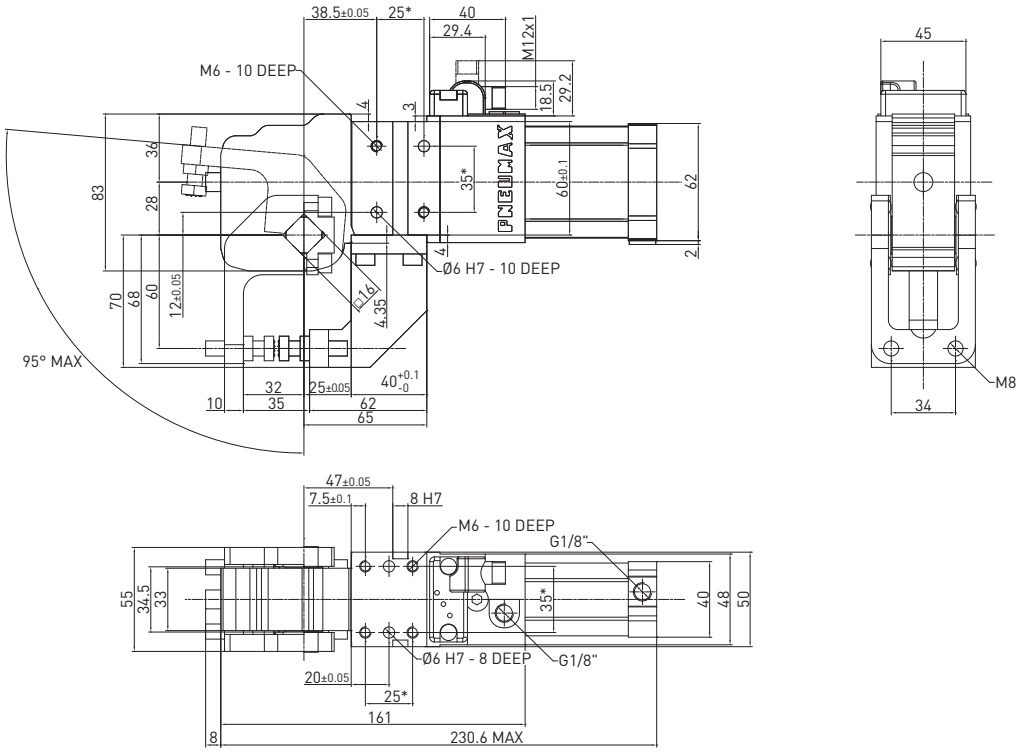

* DIMENSIONAL TOLERANCE FOR DOWEL HOLES: ±0.02

DIMENSIONAL TOLERANCE FOR THREADED HOLES: ±0.1

REV. 00 31/03/2015

HANDLING

JD_40E / Gripper clamp - Size 40 mm - Manual operation

WEIGHT 2.2 kg
D1 handle included

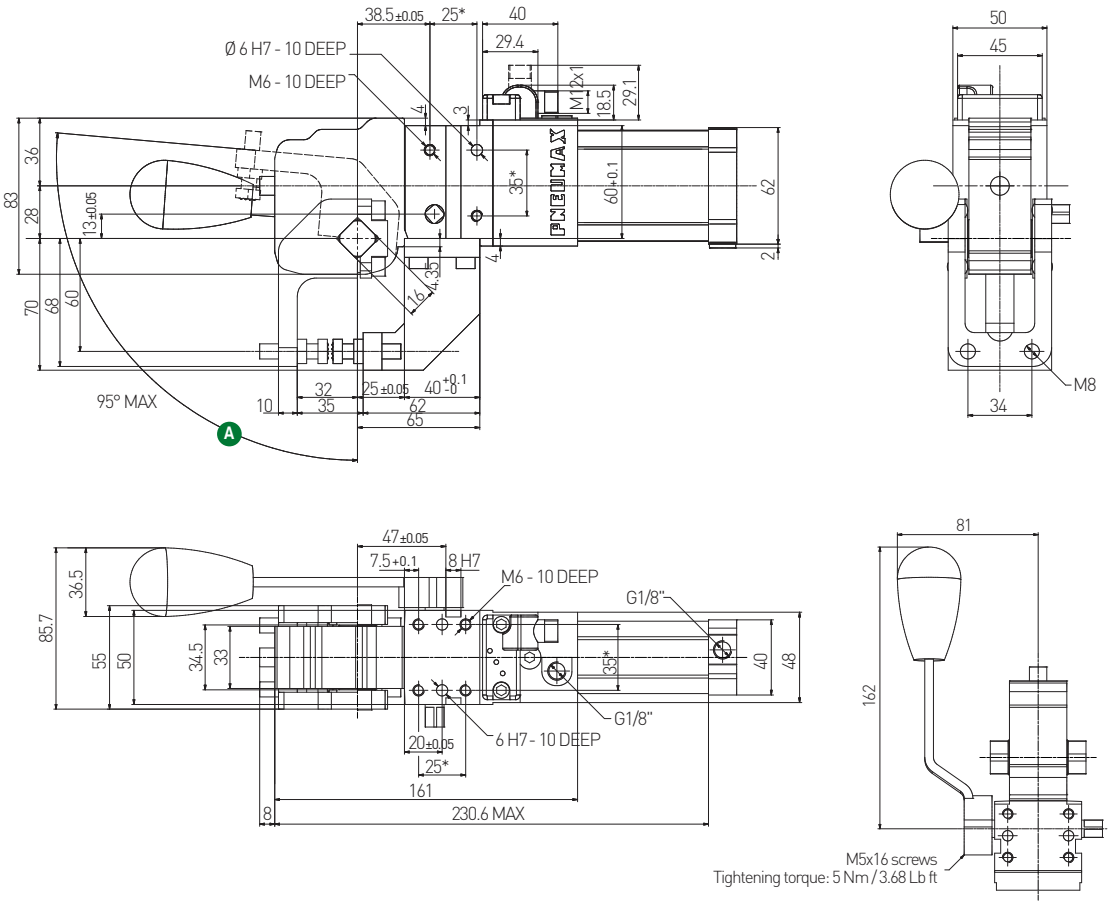

Handle swivel angle

Arm opening angle	A Handle swivel angle
0°	4.12°
15°	22.65°
30°	38.2°
45°	58.4°
60°	83.6°
75°	107.6°
90°	123.6°
105°	132.75°
120°	137.7°
135°	140°

D1 Version **D2 Version**

* DIMENSIONAL TOLERANCE FOR DOWEL HOLES: ±0.02

DIMENSIONAL TOLERANCE FOR THREADED HOLES: ±0.1

REV. 00 - 17/06/2015

QIG_H_EN Rev.00 09.2015

Handling

Quick installation guide

HANDLING

Caution

Any maintenance operation may only be carried out by qualified and authorized personnel. For any reason, do not reach into the pivoting range of the clamping arms, when the clamps are in operation. Disconnect and lock out pneumatic and electric supply lines before operating on or around clamps.

A worksheet for the right sizing of the clamp is available upon request. Visit our website for technical documents

http://automotive.pneumax.it/

Pressure operating range: from 2 to 8 bar/ from 30 to 115 psi. Inline lubrication isn't required: if lubricated air is used, it is necessary to continue using lubricated air, as the oil in it may have removed the basic lubrication in the device.

The clamp is warranted for 3 mln cycles in correct operating conditions

No lubrication.
No preventive maintenance.
External cleaning with non-corrosive detergents is required: cleaning interval depends on the ambient conditions as well as on the frequency of use.

Clamp installation to the tool

The gripper clamp can be installed by one of its four mounting surfaces, using dowels and screws according to its datasheet. The tightening torques to be set are:

M6 10 N m / 7.37 lb·ft

Use the key support surfaces, where available.
Always use all the bores on the mounting pattern.

Clamping jaws mount

The sides of the brackets have two different heights. Assemble the brackets to the side of the clamping arm, so that the surfaces, where the side mark has been machined on, will match. Secure, at first, the screw on the mark side 1 by setting the tightening torques to 22 N m /16.22 lb·ft and leave no gap between the bracket and the jaws. Then, secure the other screw 2: in this case, due to the different length of the sides of the brackets, a gap between the same and the clamping arm will be noticed. Always use locking washers. Please refer to the clamping arms' datasheet for possible clamping arm position and the respective max opening angle.

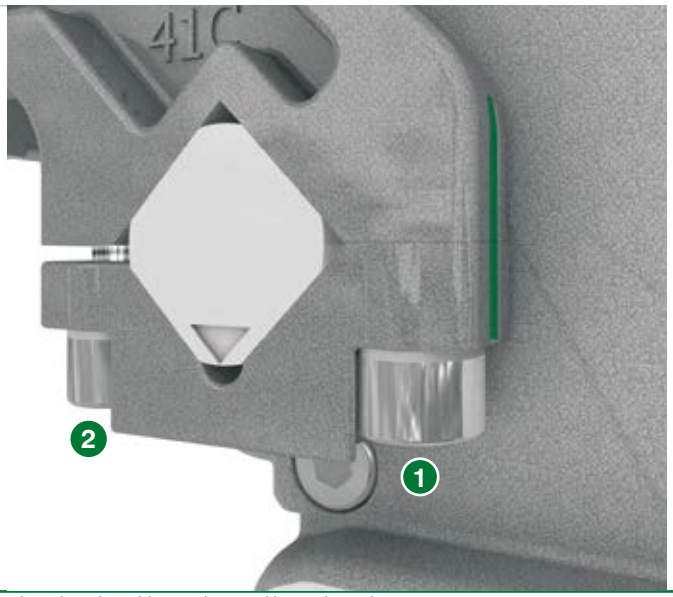

Technical information are provided for informative purpose only and can be subject to change without prior notice

Opening angle adjustment

The jaws must be in the open position. Insert a 5 mm hexagonal flat Allen Wrench or a screw gun and adjust the opening position to the required opening angle.

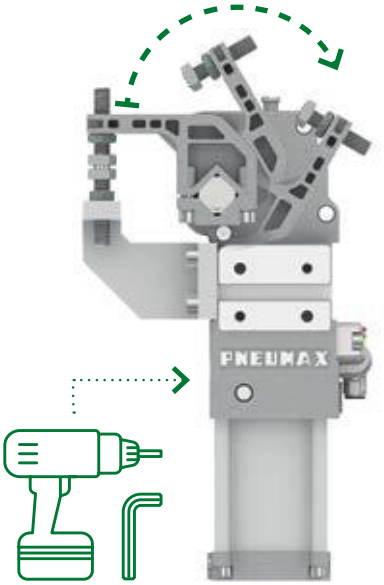

Visit our website for a video of the adjustment procedure.
No adjustment of the sensor is required.

One access point to opening angle adjustment on each side

Manual release button

To manually unlock the mechanism, hit the bolt with a rubber mallet. The linkage will automatically release itself from the over-centre position. To close the clamps during set-up operations, without air, use a screw gun or a flat Allen wrench to engage the adjustment means and adjust the clamp till 0° opening angle: the linkage will be toggle-locked as the manual release button is completely outside. The J40D and the JK40D series are equipped with a handlever, with whom the clamp can be closed and opened.

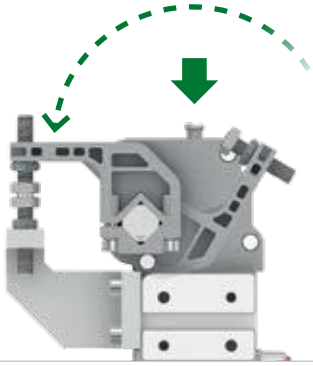

HANDLING

Adjustment Of the tips

Adjust the lower tips at a predetermined position and place the metal sheet to be held. For an optimal holding of the workpiece, adjust the tips on the mobile arm until contact with the workpiece is reached. Open and close the clamp. After a proper adjustment to get the required clamping force has been accomplished, secure the tip screws by tightening the bolts. Tips with different holding surfaces are available upon request.

Electronic sensor

ES001 is used for all clamps' sizes and series. Stepless adjustment of the connector: unscrew the tightening screw and set the connector in the required position, then secure the screw with 5 N m / 3.68 lb·ft.

Technical features	
Operating voltage	**10-30 VDC**
Voltage drop	**≤ 2 V**
Load current	**≤ 100 mA**
Current consumption	**≤ 30 mA**
Short-circuit protection	**protected**
Protection rating	**IP68**
Operating temperature	**–0 °C +50 °C**
Storage temperature	**–25 °C +60 °C**
Electromagnetic compatibility	**EN 60947-5-2:2007 + A1:2012**
Power supply indication	**green LED**
Open position indication	**yellow LED**
Closed position indication	**red LED**
Digital output type	**PNP**

To replace the sensor, remove the M5 screw and assemble a new one by tightening the same screw with 5 N m / 3.68 lb·ft.

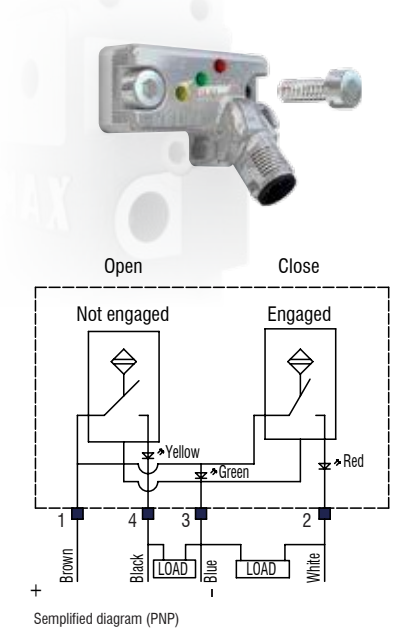

Semplified diagram (PNP)

Pivoting

Robust and reliable pivot units to accurately position and/or rotate tooling or parts to work condition

Quick set-up

Robust conical roller bearings

Easy set-up and quick installation time

The orientation of the ports can be easily achieved by untightening the tie rods.

No external limit stop required

Pneumatic cushioning of both end positions: fixed orifices and integrated cushioning provide for smooth operation in the closing and opening cycles.

Robust conical roller bearings

Drive shaft connections are all equipped with robust conical roller bearings for a **high load capacity and side load acceptance**.

All enclosed mechanism

to ensure a high protection degree against contaminants and years of service life **without maintenance** to minimize downtime associated with contamination.

Technical information are provided for informative purpose only and can be subject to change without prior notice

Power pivots

P-Series

The P series can be mounted by its rear or front mount and can be used as a **DUMP** device. By mounting the pivot units by their lateral mounts, they can be used to **ROTATE** parts, tooling and clamps' assemblies.

- **Remains locked even after loss of air pressure**
- **Front, rear and side mounting surfaces**
- **Four table mounting positions available**
- **1 sensor for all sizes and opening angle with stepless adjustable connector**
- **Extra light products**

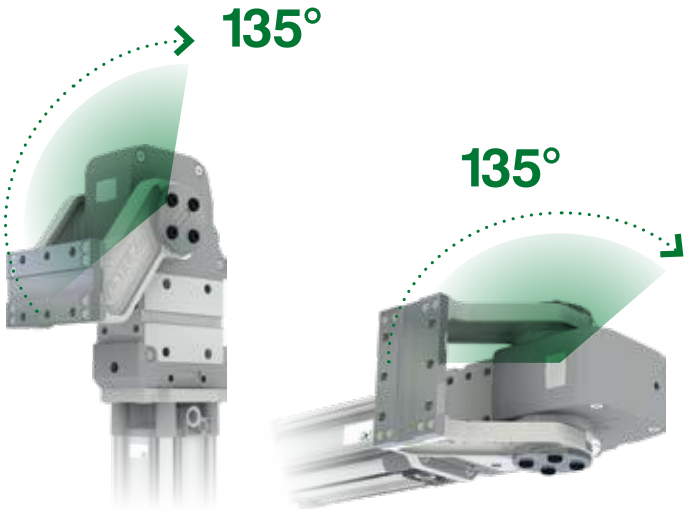

DUMP ROTATE

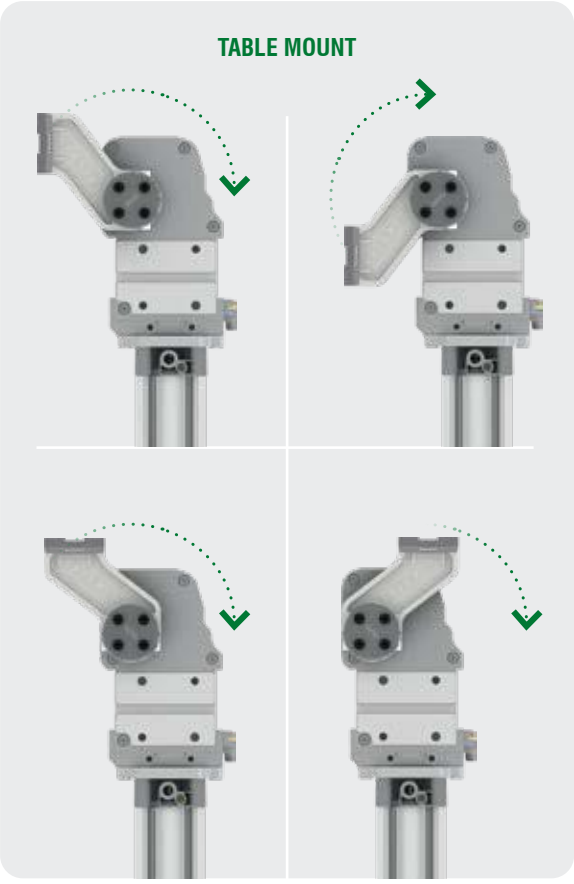

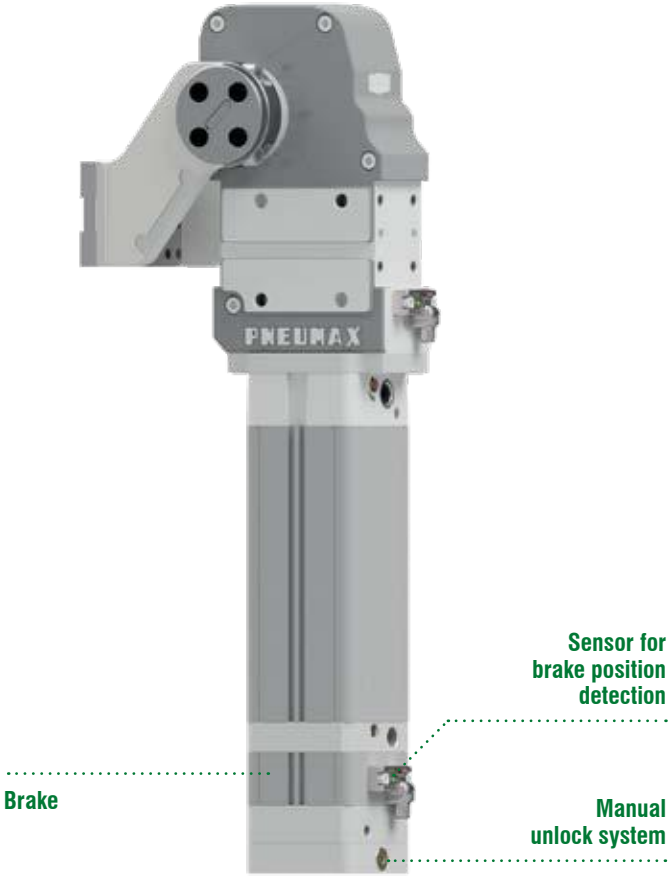

P63-Series

Pneumax guarantees high reliability of all products though a 100% testing procedure made by the Automotive division Quality Department.

Conforming to standard

GLOBAL STANDARD COMPONENTS NAAMS

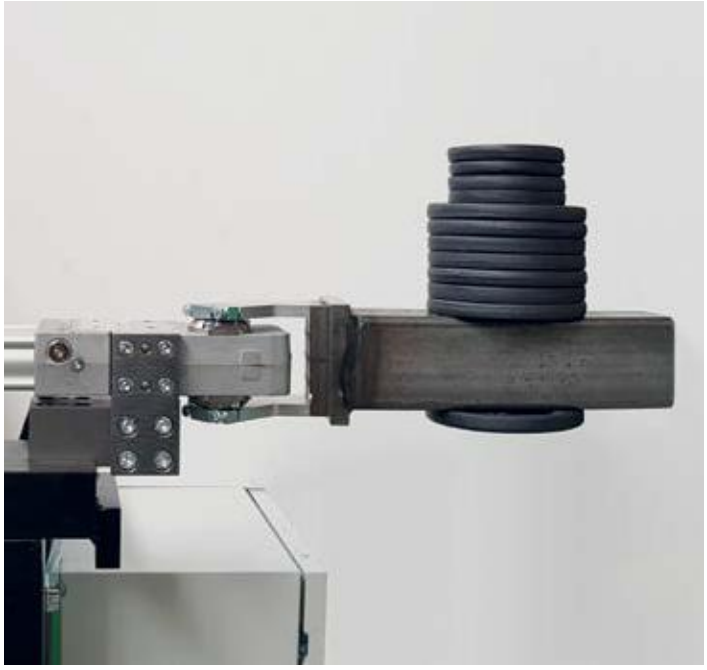

Max swivel angle: 135°

The only fully adjustable opening angle from 0° to 135° in the market.

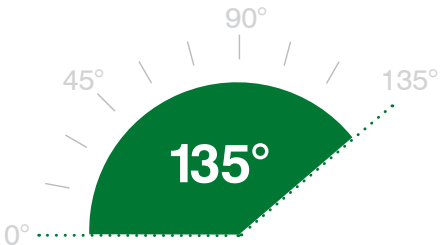

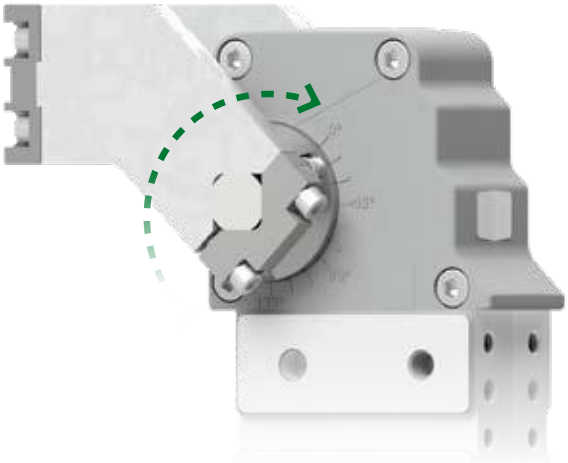

PIVOTING

Technical information are provided for informative purpose only and can be subject to change without prior notice

P-Series

Pivot units

INTERNATIONAL MOUNT

GLOBAL STANDARD COMPONENTS NAAMS

Technical features

Manual release button to open the linkage when air pressure is removed during setup.

Operating features	
Operating pressure	from 2 to 8 bar / from 30 to 115 psi
Lubrication	all the devices are lubricated for life at the factory. Inline air lubrication isn't required

Functional charts

- **Max opening angle for table positions**

	Pos. 1	Pos. 2	Pos. 3	Pos. 4
135°	✔	✘	✔	✘
120°	✔	✘	✔	✘
115°	✔	✔	✔	✘
90°	✔	✔	✔	✘
60°	✔	✔	✔	✔
45°	✔	✔	✔	✔

Any intermediate opening angle is available upon request

Size 63 mm

- **Admissible load moment** 16 N m / 10,32 lb·ft
- **Holding moment** 1.500 N m / 1.106,34 lb·ft
- **Air consumption** / Complete cycle (opening and closing)

REV. 00 - 17/06/2015

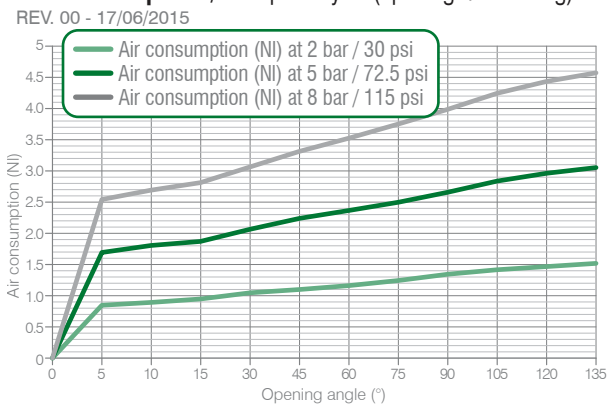

Size 80 mm

- **Admissible load moment** 70 N m / 51,62 lb·ft
- **Holding moment** 2.500 N m / 1.843,90 lb·ft
- **Air consumption** / Complete cycle (opening and closing)

REV. 00 - 15/05/2015

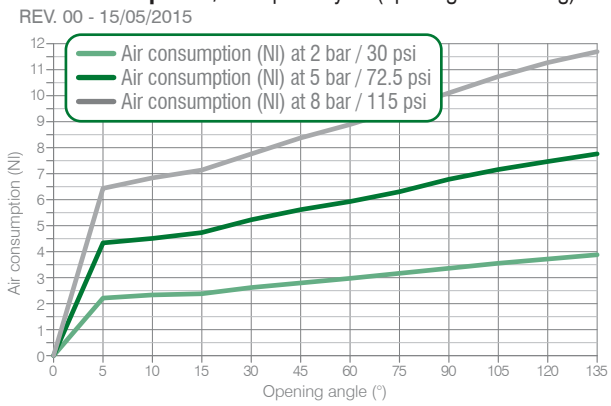

Size 100 mm

- **Admissible load moment** 130 N m / 95,88 lb·ft
- **Holding moment** 2.500 N m / 1.843,90 lb·ft
- **Air consumption** / Complete cycle (opening and closing)

REV. 00 - 15/05/2015

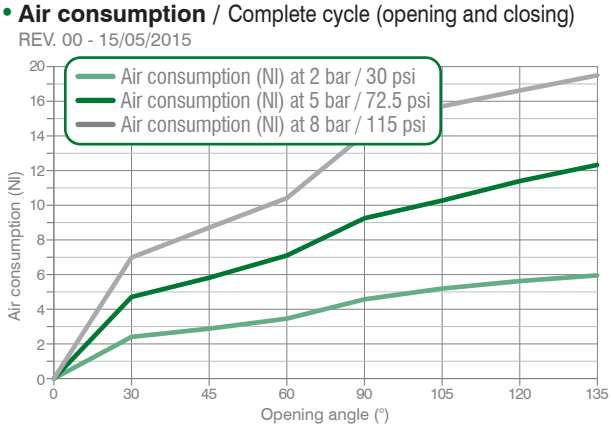

Size 125 mm

- **Admissible load moment** 180 N m / 132,76 lb·ft
- **Holding moment** 2.500 N m / 1.843,90 lb·ft
- **Air consumption** / Complete cycle (opening and closing)

REV. 00 - 15/05/2015

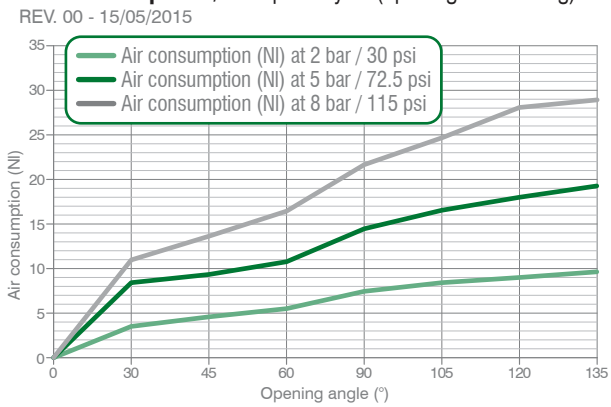

Ordering string

Size 63

P	63	E	G	1	1	N	ADJ

P	VERSION	**P**	= Pivot unit
63	SIZE	**63**	= Ø 63 mm
E	SENSOR	**E**	= electronic sensor with M12 swivel connector - PNP
		A	= electronic sensor with M12 swivel connector - NPN
		N	= no sensor
		B	= electronic sensor with M8 swivel connector - PNP
G	PORTS	**G**	= G thread – BSPP
1	MOUNTING PATTERN	**1**	= International mount
		2	= NAAMS Standard
1	TABLE MOUNT	**1**	= **2** = **3** = **4** =
N	BRAKE SYSTEM	**N**	= no brake
ADJ	OPENING ANGLE	**ADJ**	= stepless opening angle from 0° to 135°

Size 80, 100, 125

P	80	E	1	G	1	N	45	U

P	VERSION	**P**	= Pivot unit
80	SIZE	**80**	= Ø 80 mm
		100	= Ø 100 mm
		125	= Ø 125 mm
E	SENSOR	**E**	= electronic sensor with M12 swivel connector - PNP
		A	= electronic sensor with M12 swivel connector - NPN
		N	= no sensor
		B	= electronic sensor with M8 swivel connector - PNP
1	SUPPLY PORTS POSITION	**1**	= on the left side from the sensor
		2	= on the front side
		3	= on the right side from the sensor
		4	= on the sensor's side
	The supply ports position of the brake is the same as the cylinder's		
G	PORTS	**G**	= G thread – BSPP
1	TABLE MOUNT	**1**	= **2** = **3** = **4** =
N	BRAKE SYSTEM	**B**	= brake
		N	= no brake
		S	= sensor on the brake
45	OPENING ANGLE	**45°**	
		60°	
		90°	
		120°	
		135°	
	Any intermediate opening angle is available upon request - Please see the charts for table position as well as for max. opening angle		
U	UNLOCK MECHANISM FOR THE BRAKE	**U**	= unlock mechanism (only for brake system: B,S)

PIVOTING

Technical information are provided for informative purpose only and can be subject to change without prior notice

P63EG1 / Pivot unit - International mount - Size 63 mm

WEIGHT 6.5 kg

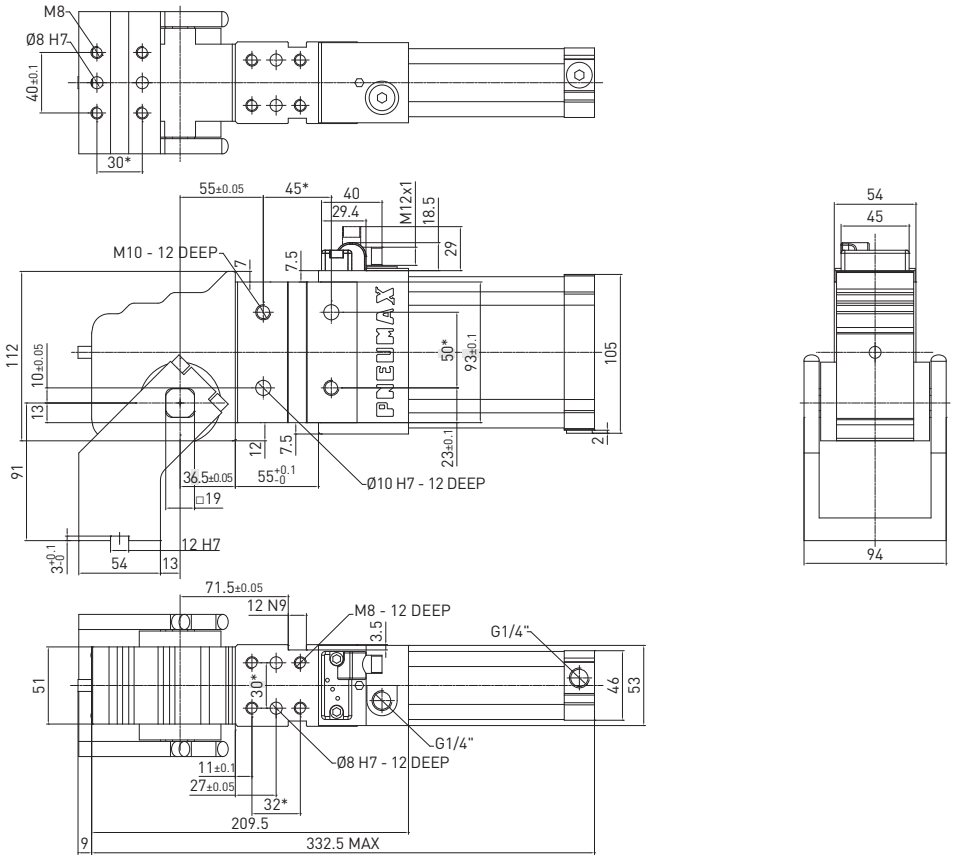

* DIMENSIONAL TOLERANCE FOR DOWEL HOLES: ±0.02

DIMENSIONAL TOLERANCE FOR THREADED HOLES: ±0.1

REV. 00 - 02/08/2019

P63EG2 / Pivot unit - NAAMS Std - Size 63 mm

WEIGHT 6.5 kg

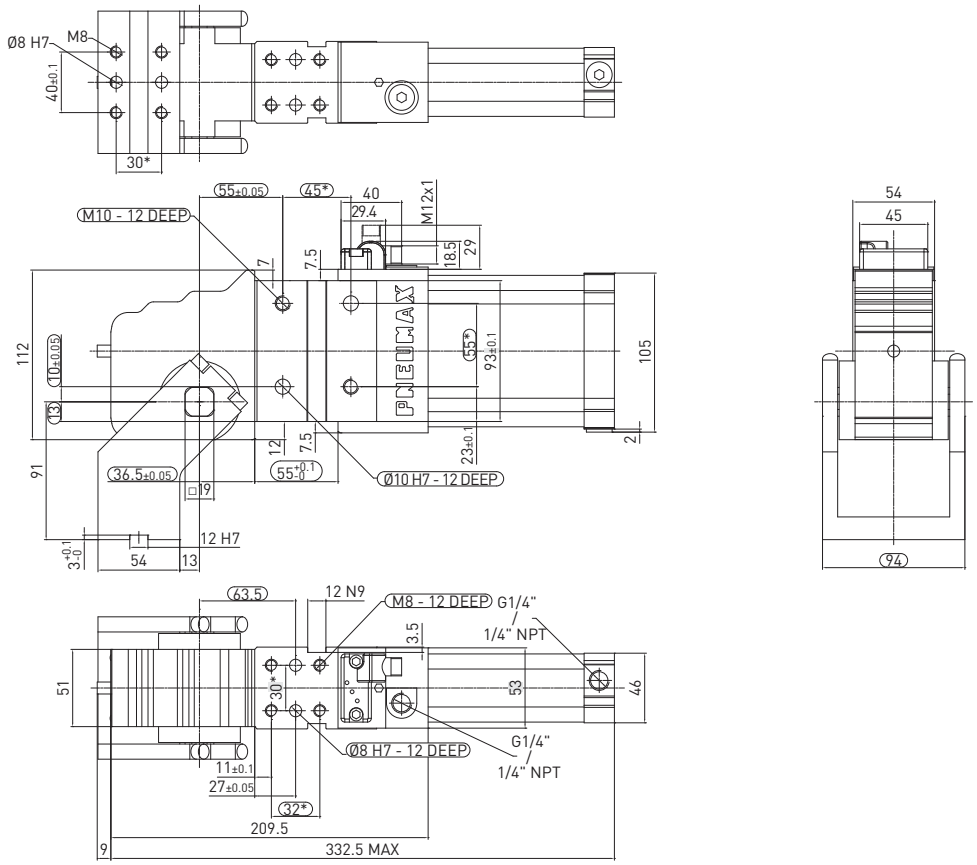

* DIMENSIONAL TOLERANCE FOR DOWEL HOLES: ±0.02

DIMENSIONAL TOLERANCE FOR THREADED HOLES: ±0.1

REV. 00 - 02/08/2019

P80__N__ / **Pivot Unit** - Size 80 mm

WEIGHT 10.7 kg
135° version

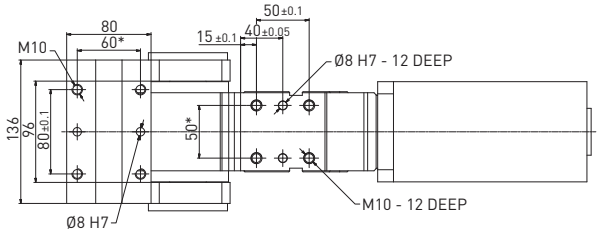

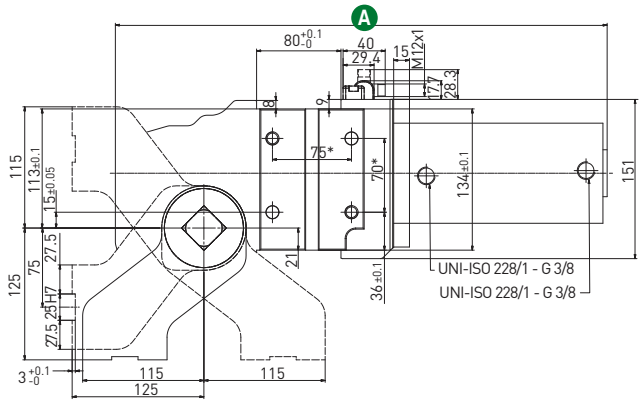

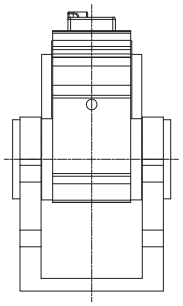

Overall length

opening angle	A Overall length (mm)
45°	466.5
60°	479
90°	504,5
120°	529
135°	537

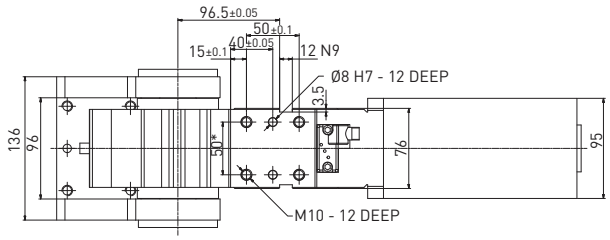

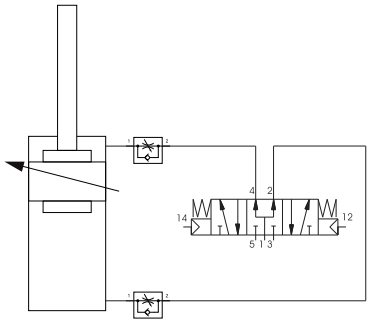

* DIMENSIONAL TOLERANCE FOR DOWEL HOLES: ±0.02

DIMENSIONAL TOLERANCE FOR THREADED HOLES: ±0.1

REV. 02 - 05/05/2021

PIVOTING

Technical information are provided for informative purpose only and can be subject to change without prior notice

P100__N__/ **Pivot Unit** - Size 100 mm

WEIGHT 12.1 kg
135° version

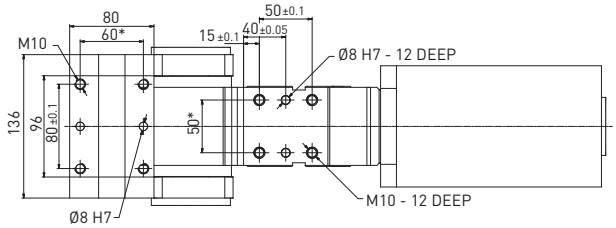

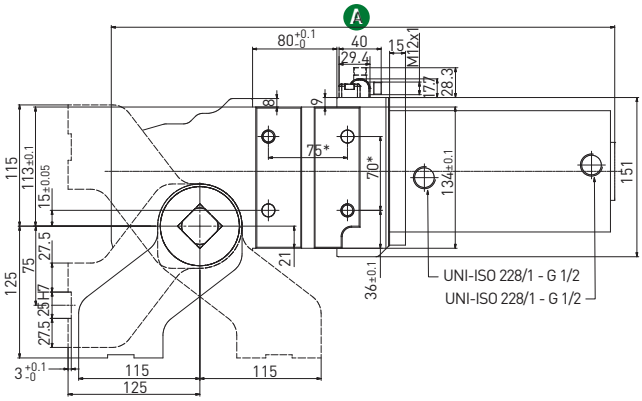

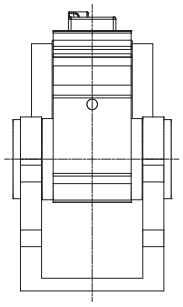

Overall length

opening angle	A Overall length (mm)
45°	477.5
60°	490
90°	515,5
120°	540
135°	548

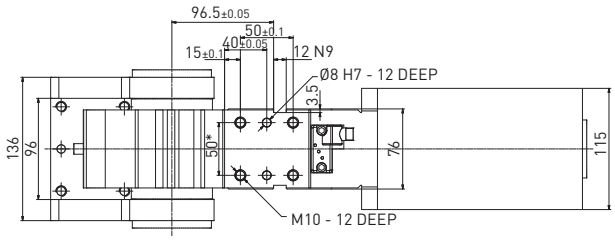

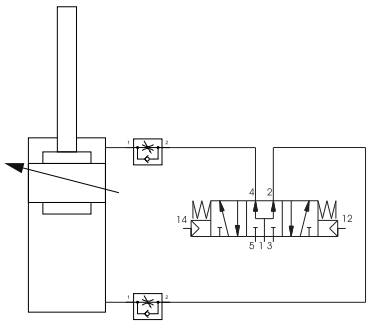

* DIMENSIONAL TOLERANCE
FOR DOWEL HOLES: ±0.02

DIMENSIONAL TOLERANCE
FOR THREADED HOLES: ±0.1

REV. 02 - 05/05/2021

PIVOTING

P125__N__ / **Pivot Unit** - Size 125 mm

WEIGHT 15.8 kg
135° version

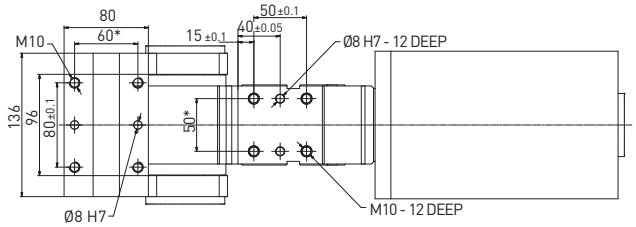

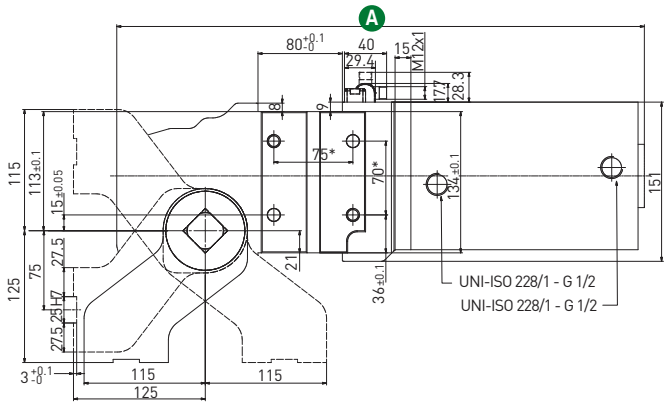

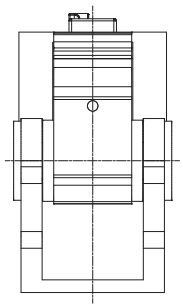

Overall length

opening angle	A Overall length (mm)
45°	500.5
60°	513
90°	538,5
120°	563
135°	571

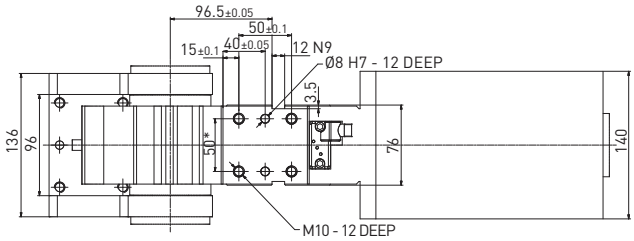

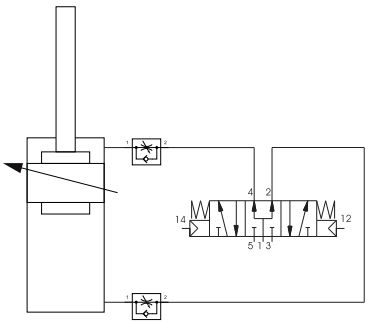

* DIMENSIONAL TOLERANCE FOR DOWEL HOLES: ±0.02

DIMENSIONAL TOLERANCE FOR THREADED HOLES: ±0.1

REV. 02 - 05/05/2021

PIVOTING

Technical information are provided for informative purpose only and can be subject to change without prior notice

P80E__B/S___ / **Pivot Unit** - Size 80 mm

WEIGHT 15.00 kg
135° version

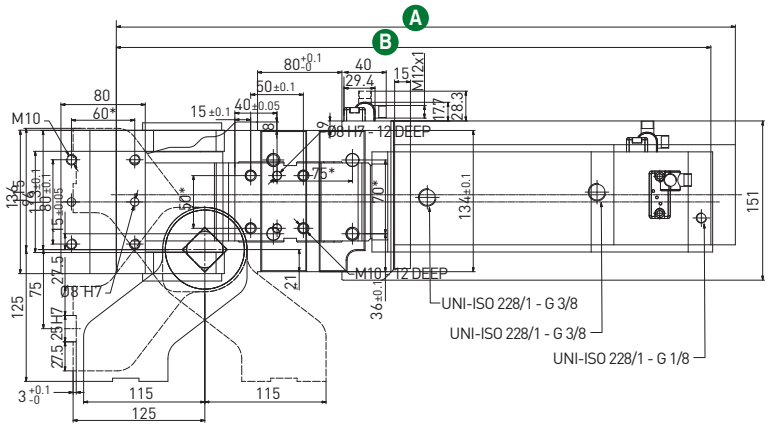

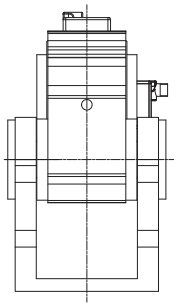

Overall length

opening angle	A Overall length (mm)	B Overall length (mm)
45°	587.3	564
60°	599.8	576.5
90°	625.3	602
120°	649.8	626.5
135°	657.8	634.5

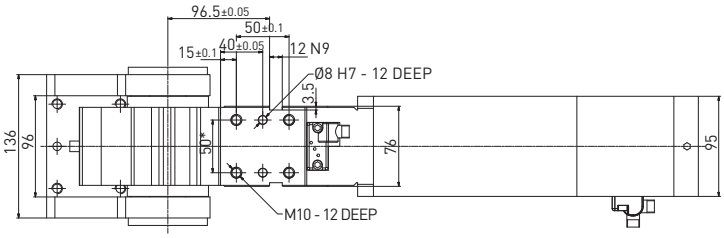

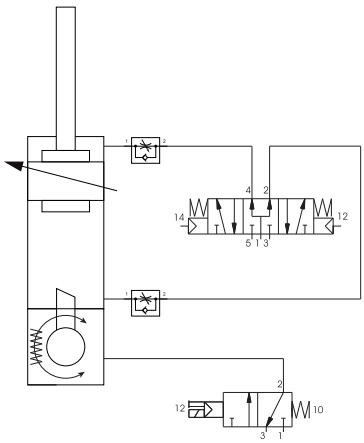

* DIMENSIONAL TOLERANCE
FOR DOWEL HOLES: ±0.02

DIMENSIONAL TOLERANCE
FOR THREADED HOLES: ±0.1

REV. 00 - 05/05/2021

PIVOTING

P100E__B/S___ / **Pivot Unit** - Size 100 mm

WEIGHT 16.00 kg
135° version

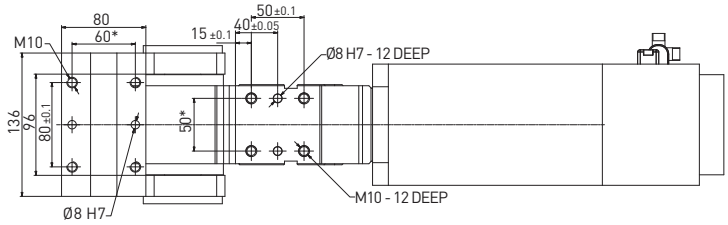

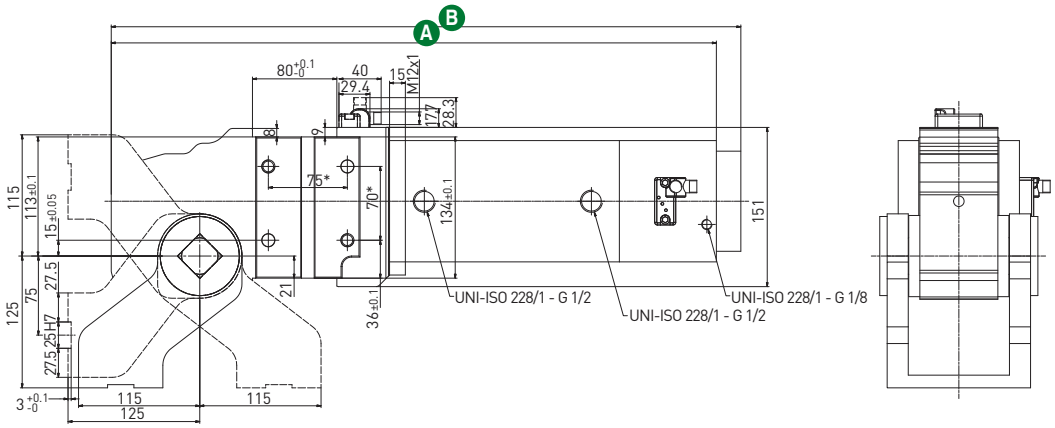

Overall length

opening angle	A Overall length (mm)	B Overall length (mm)
45°	597.3	574
60°	607.8	584.5
90°	635.3	612
120°	659.8	636.5
135°	667.8	644.5

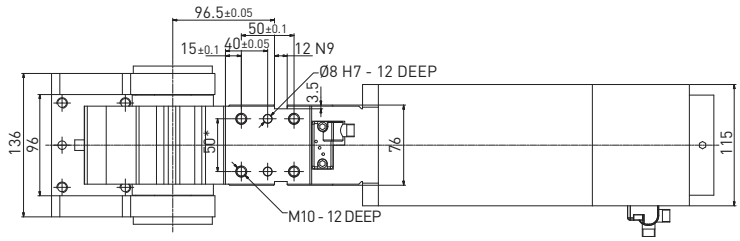

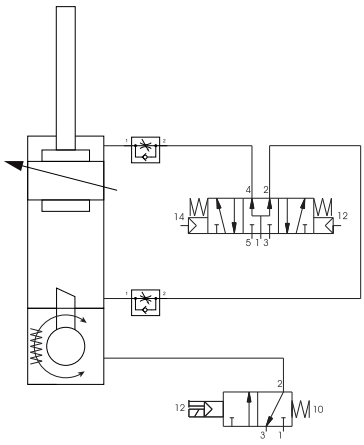

* DIMENSIONAL TOLERANCE FOR DOWEL HOLES: ±0.02

DIMENSIONAL TOLERANCE FOR THREADED HOLES: ±0.1

REV. 00 - 05/05/2021

PIVOTING

Technical information are provided for informative purpose only and can be subject to change without prior notice

P125E__B/S___ / **Pivot Unit** - Size 125 mm

WEIGHT 19.5 kg
135° version

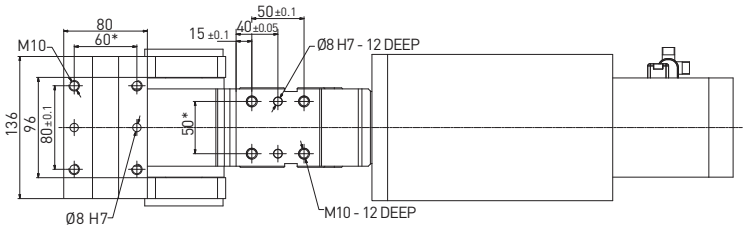

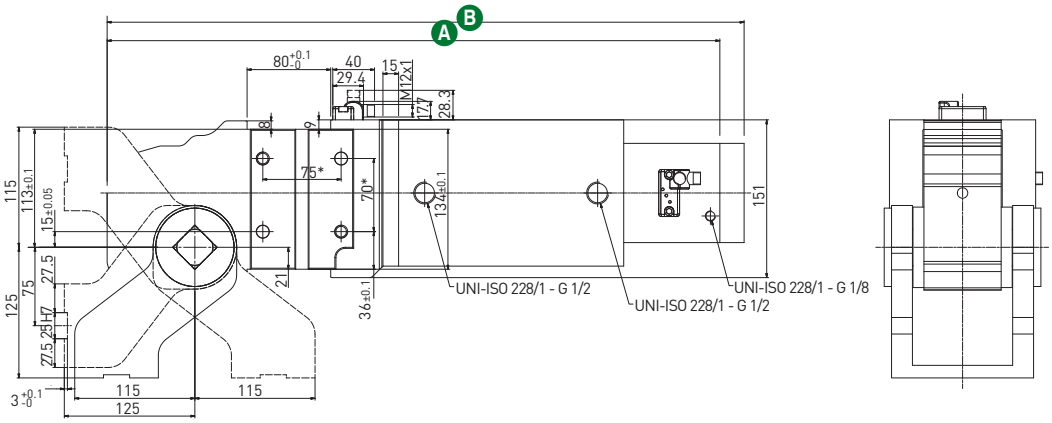

Overall length

opening angle	A Overall length (mm)	B Overall length (mm)
45°	609.8	586.5
60°	622.3	599
90°	647.8	624.5
120°	672.3	649
135°	680.3	657

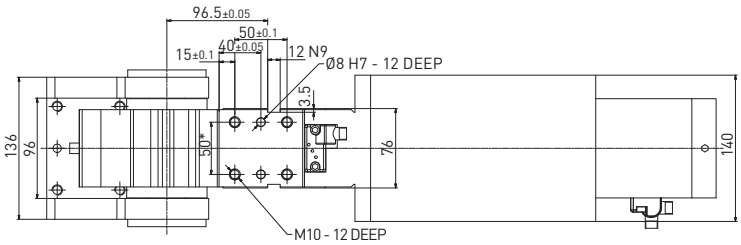

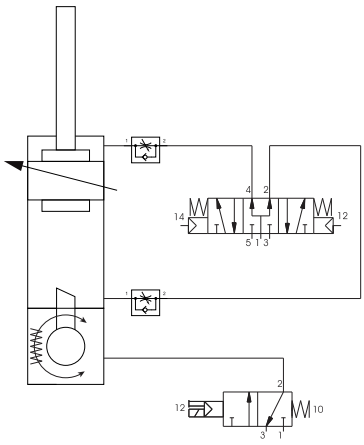

* DIMENSIONAL TOLERANCE
FOR DOWEL HOLES: ±0.02

DIMENSIONAL TOLERANCE
FOR THREADED HOLES: ±0.1

REV. 00 - 05/05/2021

PIVOTING

Pivoting

QIG_C_EN Rev.00 04.2022

Quick installation guide

Caution

Any maintenance operation may only be carried out by qualified and authorized personnel. For any reason, do not reach into the pivoting range of the units, when they are in operation. Disconnect and lock out pneumatic and electric supply lines before operating on or around power pivots.

Functional description

PNEUMAX power pivots are rotating units typically used in the field of sheet metal working. A pneumatic cylinder operates a toggle linkage and drives it to its closed or open position. A toggle mechanism, integrated in the power pivot's housings, guarantees the closed condition even in the absence of the actuation command.

An external actuating arm is connected to the shaft of the linkage. Power pivots are robust and reliable devices used in fixtures to accurately position and rotate workpieces: they are equipped with robust conical roller bearings with high-load capacity and side load acceptance. They can be mounted by their rear or front mounting surfaces and be used as dump devices, or they can be mounted by their side mounting surfaces and be used to rotate parts or assemblies. The open and closed positions of the actuating arm, also referred to as swivelling table or saddle arm, is detected by an inductive sensor through integrated sensor means in the linkage. Power pivots can be equipped with brake devices configured to stop the unit during its stroke in case of pressure loss.

Safety

Power pivots are designed and manufactured as components to be incorporated in more complex systems or toolings: they are not stand-alone or independent ready-to-be-used devices and for this reason they are not equipped with their own safety equipment.
Power pivots should not be operated before the complete safety control system of the tooling is activated and certified as conforming to all directives and related safety requirements.
All operations and any maintenance work on power pivots must be carried out exclusively by trained staff and by observing all conditions which guarantee the safety of the personnel, in a complete standstill of the whole system.

Handling

Make sure that the packaging is not damaged before unboxing the units; given its considerable weight, it is advisable to use a suitable lifting system and to guarantee that during its handling the load is stably balanced.

Power pivots installation to the tool

Power pivots can be installed by one of their mounting surfaces, using dowels and screws according to its datasheet. The tightening torques to be set are:

M5	5 N m / 3.68 lb·ft
M6	10 N m / 7.37 lb·ft
M8	25 N m / 18.43 lb·ft
M10	35 N m / 25.81 lb·ft
M12	50 N m / 36.87 lb·ft

Use the key support surfaces, where available.
Always use all the bores on the mounting pattern.

Operating conditions

Pressure operating range:

from 2 to 8 bar/ from 30 to 115 psi

Inline lubrication isn't required:
if lubricated air is used, it is necessary to continue using lubricated air, as the oil in it may have removed the basic lubrication in the device.

Technical information are provided for informative purpose only and can be subject to change without prior notice

Electronic sensor

ES001 is used for all power pivots' sizes and and for the detection of the brake condition (activated/ deactivated). Adjustment of the connector: unscrew the tightening screw and set the connector in the required position, then secure the screw with 5 N m / 3.68 lb·ft.

Technical features	
Operating voltage	10-30 VDC
Voltage drop	≤ 2 V
Load current	≤ 100 mA
Current consumption	≤ 30 mA
Short-circuit protection	protected
Protection rating	IP68
Operating temperature	–0 °C +50 °C
Storage temperature	–25 °C +60 °C
Electromagnetic compatibility	EN 60947-5-2:2007 + A1:2012
Power supply indication	green LED
Open position indication	yellow LED
Closed position indication	red LED
Digital output type	PNP

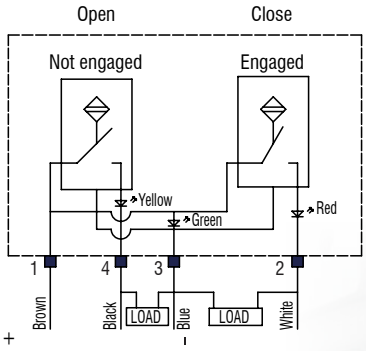

Semplified diagram (PNP)

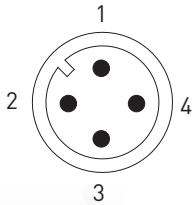

To replace the sensor, remove the M5 screw and assemble a new one.

Pneumatic connection
Recommended pneumatic scheme

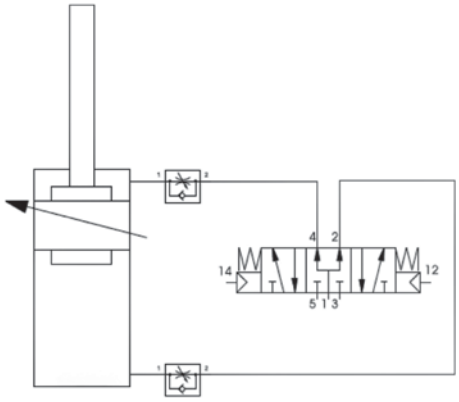

Power pivot without brake

Power pivot with brake system

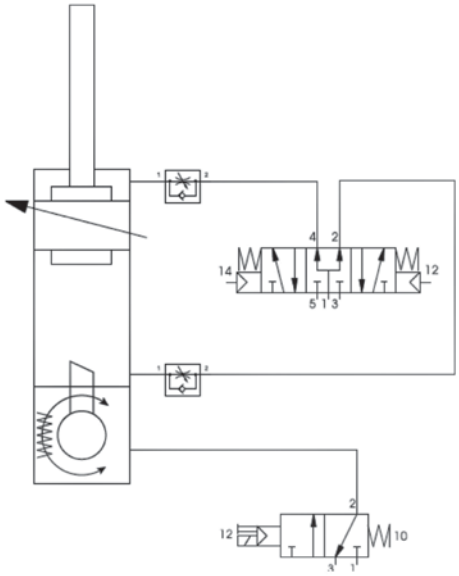

Manual release mechanism of the linkage

A manual override access to untoggle the linkage in case of emergency is provided for all power pivots. Before unlocking the mechanism, make sure not to reach into the swivel area of the saddle arm: once the linkage is untoggled, the arm can move quickly and abruptly in any direction.

WARNING Make sure all safety requirements are met. Such operations must be carried out by qualified specialists.

PIVOTING

Brake system

A patented brake system allows for a reliable braking in case of pressure drop. An original design guarantees a wide braking surface in extremely reduced radial dimensions. The brake system is designed for static conditions.
Operating pressure: **2.5 to 8 bar**
We suggest to carry out a yearly functional test of the brake system by simulating an emergency stop.

Patented

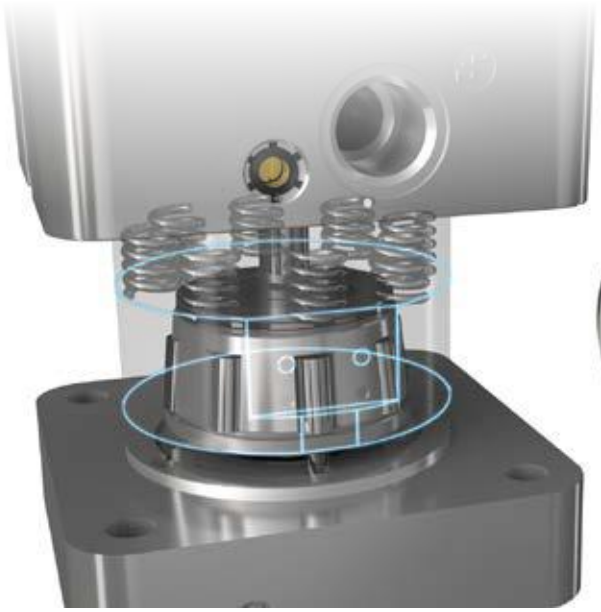

Brake manual unlock device for emergency situations

Power pivots can be equipped with an unlock device to disengage the brake in case of emergency.
A built-in access for a 5 mm Allen wrench is integrated below the rear end cap. A clockwise movement of the Allen wrench will unlock the brake.
This procedure mus be carried out exclusively by qualified specialists. Make sure to meet all related safety requirements and make sure that no operatorreaches into the swivel area of the arm.

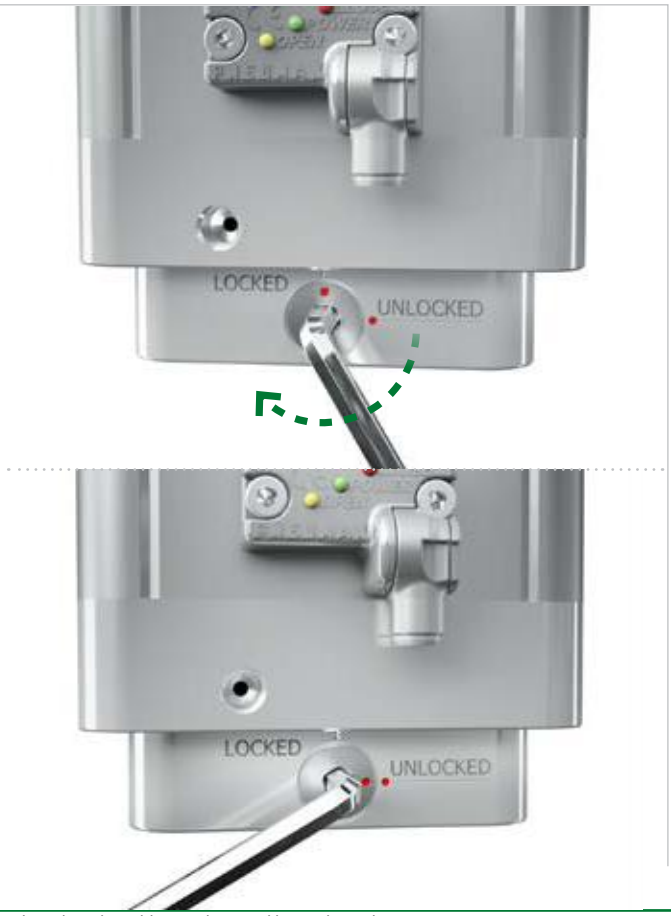

WARNING

Unlocking the brake will generate an immediate, abrupt movement of the load.
Once the Allen wrench is removed and air is supplied again to the unit, the brake will reset itself automatically.

Technical information are provided for informative purpose only and can be subject to change without prior notice

Orientation of the supply ports

The orientation of the supply ports on any power pivot can be easily and quickly modified, simply by untightening the 4 tie rods and rotating the cylinder block. Air must be disconnected during this procedure. Make sure to comply with the tightening torque specifications shown in the previous pages “power pivots installation to the tool”.

External stops, guides and shock absorbers

Using external stops, guides and shock absorbers is not a recommended procedure, as it may interfere with the correct functioning of the unit. All Pneumax power pivots are equipped with an integrated hard stop for the linkage, which guarantees an accurate and repeatable closed position. By using additional external stops or guides which prevent the power pivot to completely reach its end stroke, the correct functioning of the linkage will be jeopardized and it will invalidate any warranty of the unit.
In case external stops or guides are installed by the customers, they must not interfere with the correct functioning of the unit.
In case external guides are used, they must not generate any interference higher than 0,05 mm on their support.
In case the load conditions require shock absorbers to be installed, it is strongly recommended that they do not reach their end-stroke before the power pivot is toggle locked.

Stocking conditions

Warehouse temperature: **from -20°C to 50 °C**
Relative humidity: **10% to 90%**

Info

For any further information, do not hesitate to contact us at

automotive@pneumaxspa.com

MLGA NC Locator

Multi-Axes Locator for Geometric Alignments

In partnership with

TELMOTOR

SIEMENS

Positioning locator with interpolated electric actuators with ball bushings and brushless servo motors, all controlled by a digital driver system to provide the geometric alignments.

- **Compact design**: the MLGA can be used on grounded toolings or on end effectors with robots
- **High repeatability** and high location accuracy
- **High protection** level against contamination: all components are protected against welding spatter and deposits of debris from on-going mechanical processes. Suitable for harsch environments, as Body In White
- **User-friendly interface** - Simplified HMI, augmented reality and cloud connection.

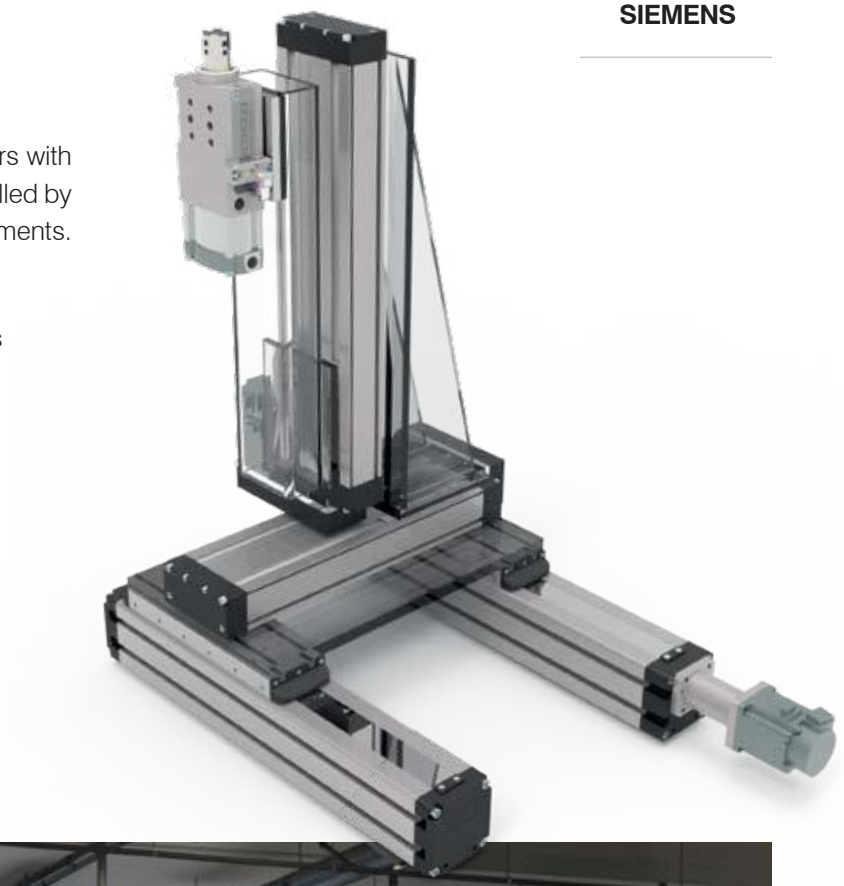

Technical information are provided for informative purpose only and can be subject to change without prior notice

Compactness

High repeatability

High resistance

User-friendly Interface

General features

- **DIGITAL TWIN** for commissioning, testing,training and customer specific adoption.
- **RECONFIGURABILITY**: the system allows the operator to adjust the location in order to quickly and easily adapt to different geometric alignments of different models
- **SINAMICS S120** drives with extended safety functions
- **SIMATIC IoT2040 PLATFORM**: in Cloud accurate monitoring of functional parameters and data analytics.
- **SINEMA REMOTE CONNECT** for secure maintenance and connection
- **AUGMENTED REALITY** for easy to use interoperability with the machine and production line.

Interpolation of different systems

Possible configuration for process time reduction

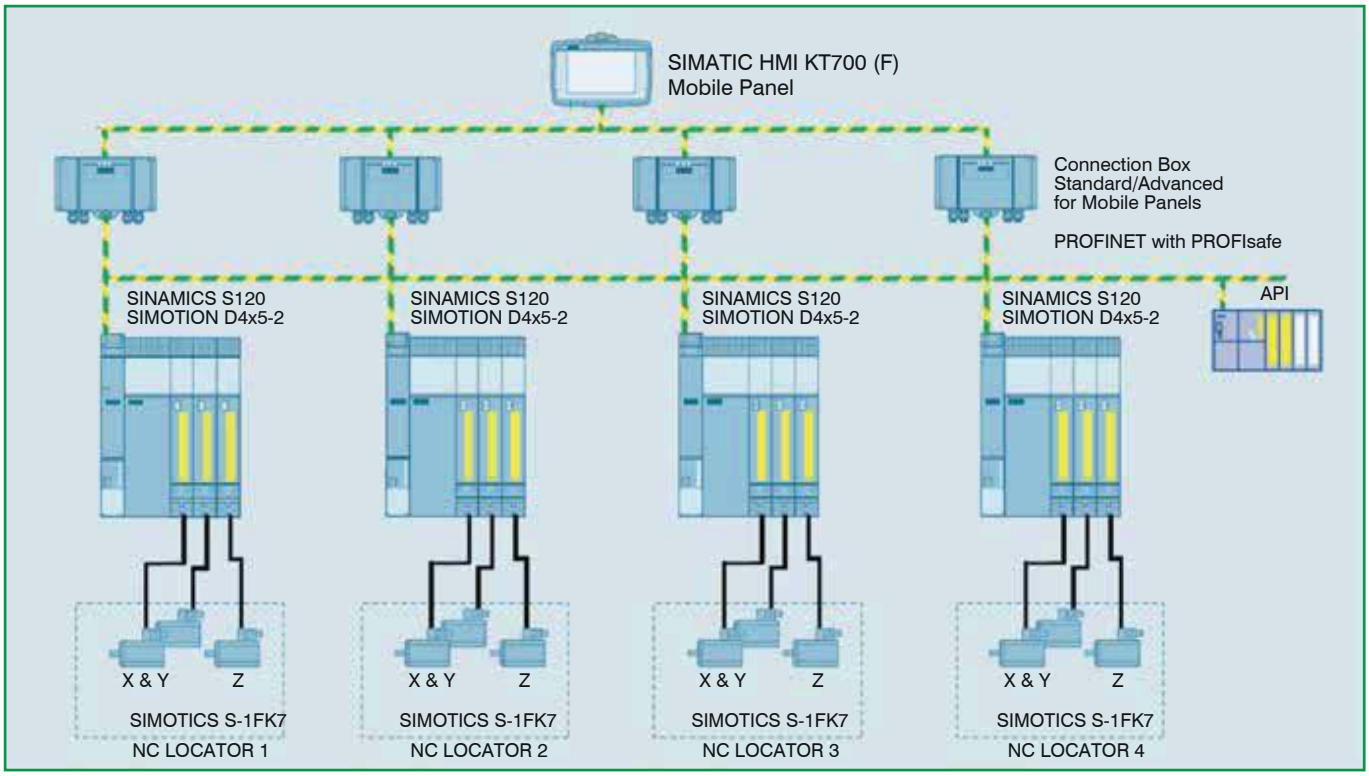

Electric actuation

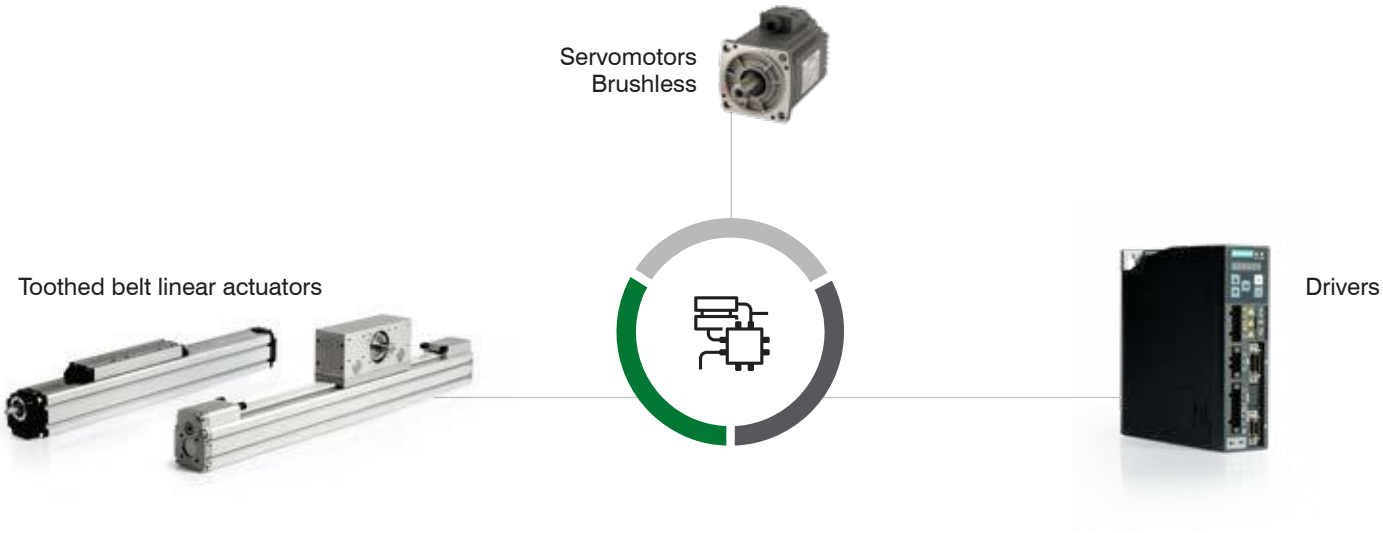

Ball screw linear actuators

The ball screw linear actuators are available in many series and sizes: they show differ load capabilities and maximum precision and reliability.
Anodized aluminum profile with mounting holes to install sensors along the length of the actuators.
Protection against external contamination is achived thanks to hardened stainless steel strip and sliding elements on the outer carriage. Dual-guide versions are ideal for high load and for high inertia moments applications.

- **Compact linear tables with double parallel guides**
- **Hardened stainless steel strip**
- **Compact linear tables**
- **Available with double external guide**
- **Square-profile actuators with single or double guide**
- **Protective bellows and integrated position sensor**
- **“T” slot for proximity switches**

Technical information are provided for informative purpose only and can be subject to change without prior notice

Toothed belt linear actuators

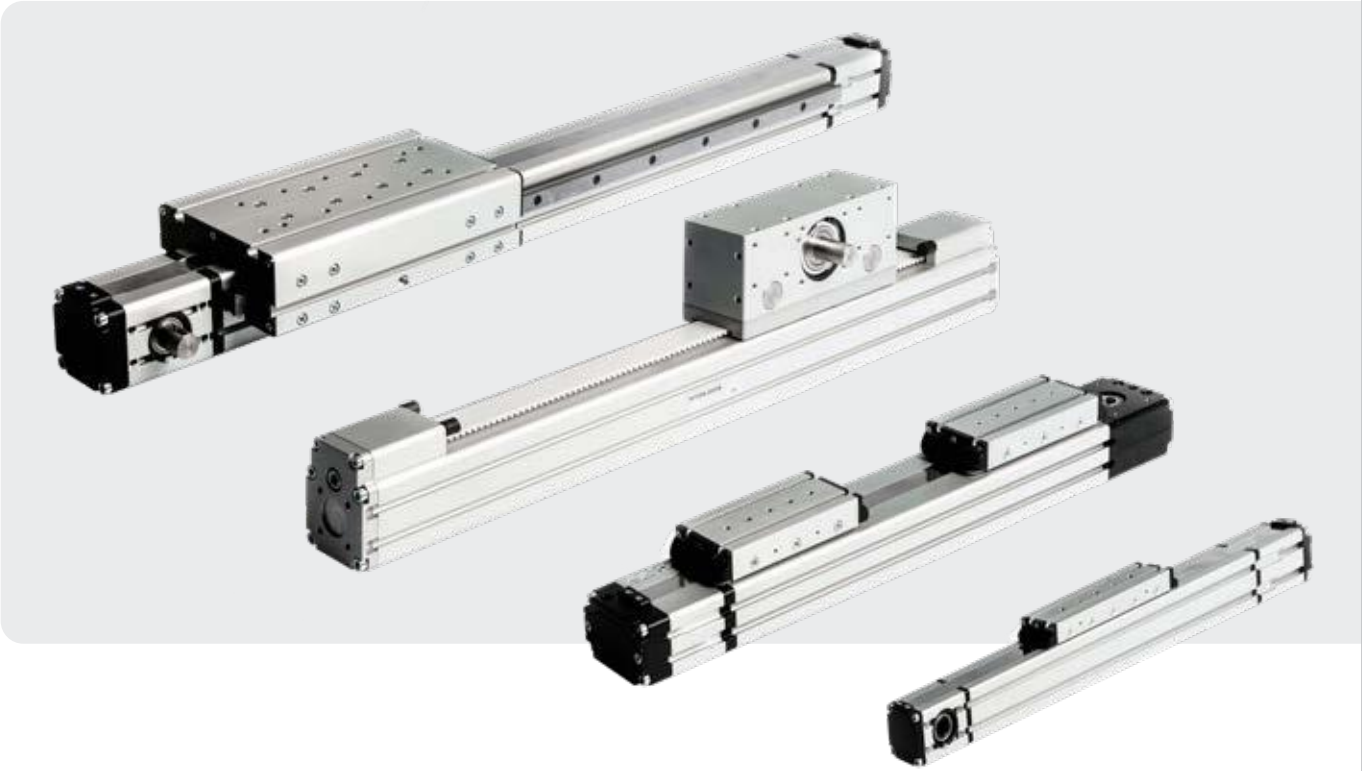

Linear actuators with steel reinforced polyurethane toothed belt and belt tensioning system are available with one or two ball rail systems. “T” slot as mounting surface and “T” slot for proximity switches.

- **Carriage in anodized aluminum with “T” slots**
- **Square profile with double external guide**
- **Motor mount assembly available in two different versions**
- **Actuator with motor mounted to the transmission box for vertical application**
- **Actuator with single or double carriage and bidirectional movement**
- **Square profile with single or double guide**
- **Flat profile**
- **Integrated tensioning system**

Servomotors and drives

- **IP65 protection degree avilable**
- **Internal setpoint (IPOS) for position control**
- **Profinet interface connection**
- **Maximum productivity and energy efficiency**
- **Oveload possibility: up to thrice of the nominal torque**
- **Integrated braking resistor**
- **Pulse train positioning (PTI)**

Complementary products

Fittings

Fully guided sleeve

Tubes

External layer:
Flame resistant V-0

Middle layer:
Aluminun foil

Inner layer:
Polyurethane

ISO 15592 cylinders

Compact guided cylinders

Special design product

Technical information are provided for informative purpose only and can be subject to change without prior notice

Tubes

Three-Layer Polyurethane tube

Patented

- High flexibility
- Spatter resistant
- Suitable for arc welding and for pneumatic piping in harsh environments
- Available in 3 colours

Technical features

Part no.	D x d mm	T mm	P bar	P1 bar	R mm	Weight (kg)	Package mt
FRTTPU0425	4 x 25	1	8	36	30	3.85	100
FRTTPU0604	6 x 4	1	8	36	50	7.2	100
FRTTPU0805	8 x 5	1	8	32	60	8.3	100
FRTTPU1065	10 x 6.5	1	8	28	70	11	100
FRTTPU1208	12 x 8	1	8	24	80	13.5	100

Shore: A 95

D = external diameter
d = internal diameter
P1 = -breaking pressure
T = cover thickness
R = bending radius

To be used with AT-fitting series, to allow a proper protection of the tube from welding sparks.

Cutting specs

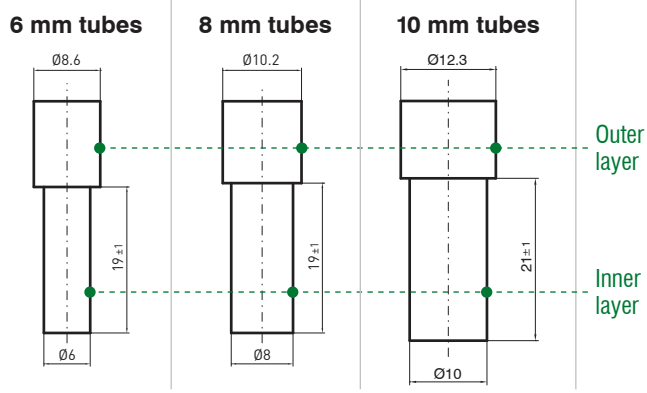

To allow a proper installation of the fittings, cut 19 mm out of the outer layer.

Ordering string

Polyurethane tube

FRTTPU 06 04 N

-	VERSION	**FRTTPU** = 3-layer polyurethane tube
06	OUTER DIA	**04** = Ø 4 mm **06** = Ø 6 mm **08** = Ø 8 mm **10** = Ø 10 mm **12** = Ø 12 mm
04	INNER DIA	**25** = Ø 2.5 mm **04** = Ø 4 mm **05** = Ø 5 mm **65** = Ø 6.5 mm **08** = Ø 8 mm
N	COLOUR	**N** = black **B** = blue **R** = red

Cutting devices for tubes

FRC06	CUTTER FOR FRTTPU Ø 6	min. order quantity 5 pieces
FRC08	CUTTER FOR FRTTPU Ø 8	min. order quantity 5 pieces
FRC10	CUTTER FOR FRTTPU Ø 10	min. order quantity 5 pieces
FRC12	CUTTER FOR FRTTPU Ø 12	min. order quantity 5 pieces

Fittings

Patented

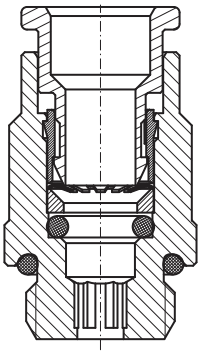

Brass push-in fittings for welding applications

- No covers required spatter-proof
- Prolonged thrust sleeve for optimal protection of the tube against welding debris
- The internal components are optimally guided for an enhanced retaining of the tubes
- Specific for 3-layer polyurethane tube

Ø 6

01AT0614	01AT0618	03AT0600	04AT06L0	05AT0600	08AT0806	15AT0618	15AT0614
pag. 164	pag. 164	pag. 164	pag. 165	pag. 165	pag. 165	pag. 166	pag. 166

22AT06M5	22AT0614	22AT0618	22LAT0614	22LAT0618	29AT0614	29AT0618	29AT0614P	29AT0618P
pag. 166	pag. 167	pag. 167	pag. 167	pag. 168	pag. 168	pag. 168	pag. 169	pag. 169

07AT0600	23AT0600	105ATM318	10AT0600
pag. 169	pag. 170	pag. 170	pag. 170

Ø 8

01AT0814	01AT0818	03AT0800	04AT08L0	05AT0800	08EAT0608	15AT0818	15AT0814
pag. 171	pag. 171	pag. 171	pag. 172	pag. 172	pag. 172	pag. 173	pag. 173

22AT0814	22AT0818	22LAT0814	22LAT0818	29AT0814	29AT0818	29AT0814P	29AT0818P	29AT0838
pag. 173	pag. 174	pag. 174	pag. 174	pag. 175	pag. 175	pag. 175	pag. 176	pag. 176

07AT0800	23AT0800	10AT0800
pag. 176	pag. 177	pag. 177

Technical information are provided for informative purpose only and can be subject to change without prior notice

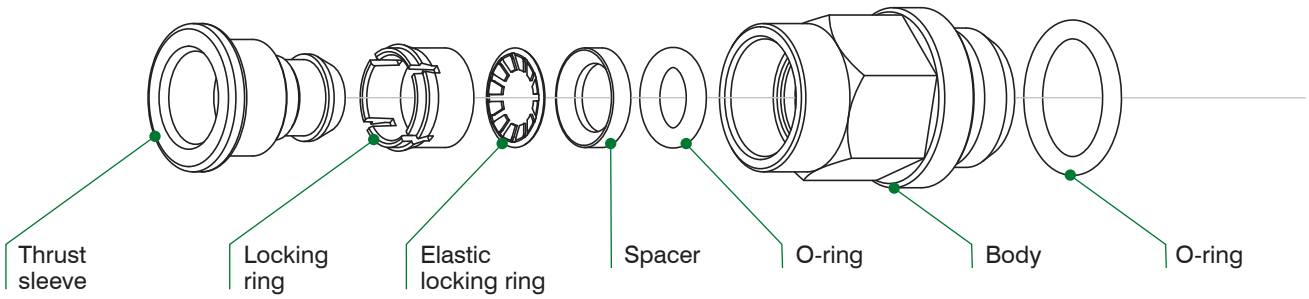

Ø 10

01AT1038	01AT1012	03FAT1000	05AT1000	07AT1000	10AT1000	15AT1038
pag. 177	pag. 178	pag. 178	pag. 178	pag. 179	pag. 179	pag. 179

22AT1038	22AT1012	29AT1038
pag. 180	pag. 180	pag. 180

Selection of accessories

6.01.05.F	6.01.18/F	6.01.18/F with lock nut	6.01.F G1/8"	6.01.14/1	6.01.F G1/4"	6.01.F G1/2"	06.01.34
pag. 181	pag. 181	pag. 181	pag. 182	pag. 182	pag. 182	pag. 183	pag. 183

6.02.I	6.02.I.C.L	6.04.I	6.04.04	6.07.18.G	6.07.T	6.08.C/4	6.08.C/8	6.09.14.F	6.09.12.F
pag. 183	pag. 184	pag. 184	pag. 185	pag. 185	pag. 185	pag. 186	pag. 186	pag. 187	pag. 187

AT50C18V	AT50C18PVM	AT50C14V	AT50C14PVM	AT50C38V	AT50C38PVM	PNM0392	PNM0393	PNM0394	PNM0395
pag. 187	pag. 188	pag. 188	pag. 188	pag. 189	pag. 189	pag. 190	pag. 190	pag. 191	pag. 191

COMPLEMENTARY PRODUCTS

01AT0614

REV. 00 - 12/10/2018

Straight fitting

Ø6 G1/4”

AT Series with NBR seals

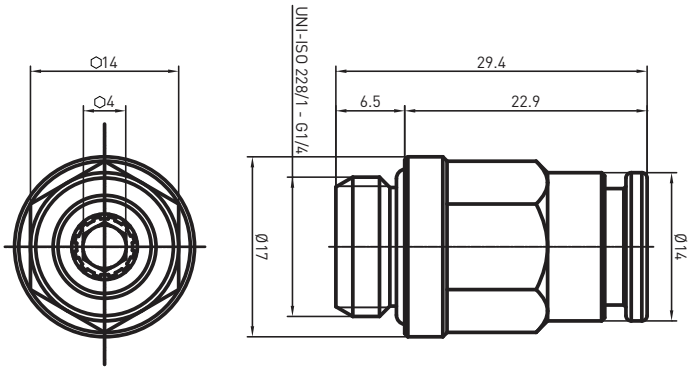

01AT0618

REV. 00 - 12/10/2018

Straight fitting

Ø6 G1/8”

AT Series with NBR seals

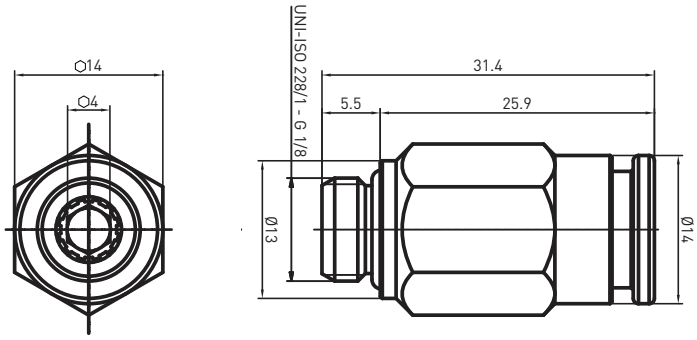

03AT0600

REV. 00 - 15/10/2018

Straight connector

Ø6

AT Series with NBR seals

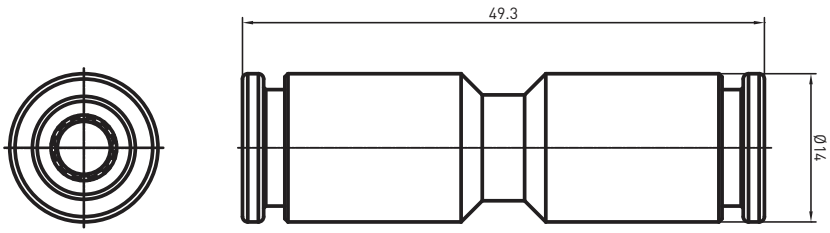

Technical information are provided for informative purpose only and can be subject to change without prior notice

04AT06L0

Elbow connector

Ø6

AT Series with NBR seals

REV. 00 - 15/10/2018

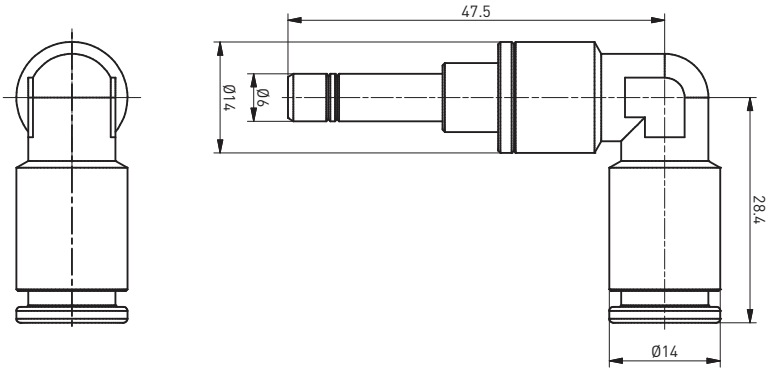

05AT0600

T connector

Ø6

AT Series with NBR seals

REV. 00 - 29/11/2018

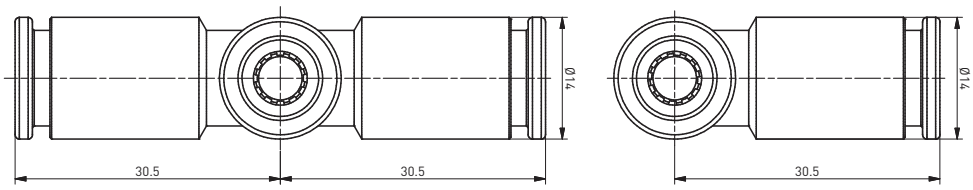

08AT0806

Plug-in reducer

Ø8M Ø6F

AT Series with NBR seals

REV. 00 - 27/09/2018

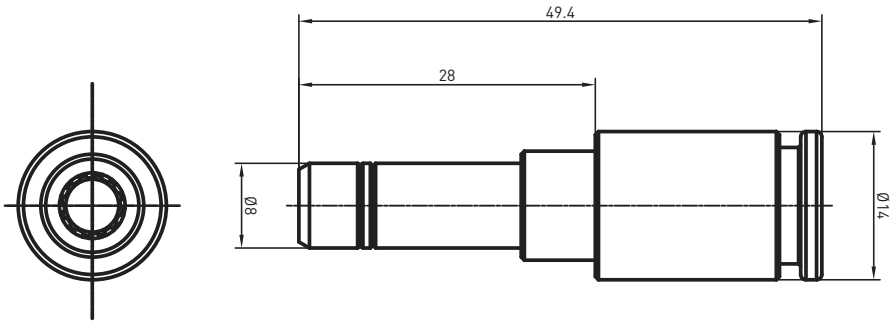

15AT0618

Complete single banjo

Ø6 - G1/8”

AT Series with NBR seals

REV. 00 - 15/10/2018

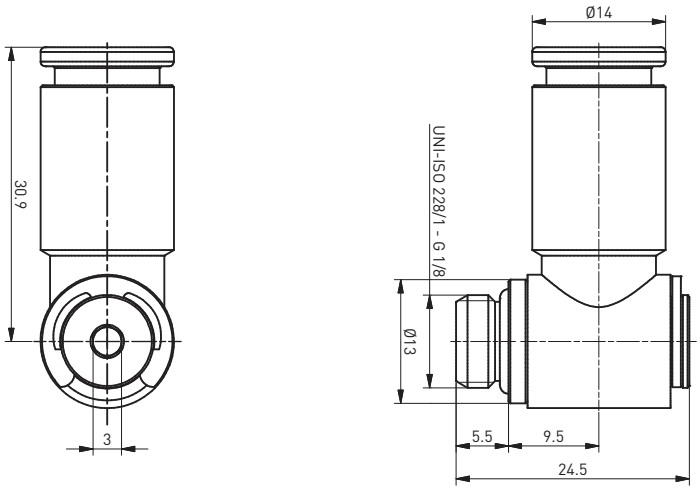

15AT0614

Complete single banjo

Ø6 - G1/4”

AT Series with NBR seals

REV. 00 - 15/10/2018

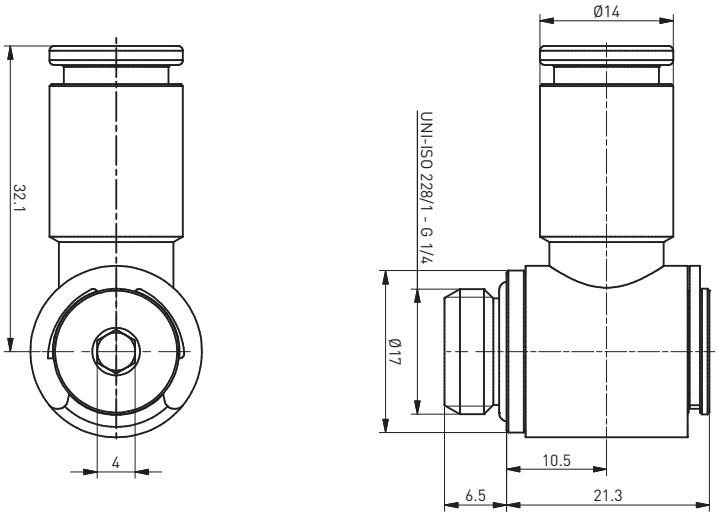

22AT06M5

Swivel elbow male adaptor parallel

Ø6 - M5

REV. 00 - 29/11/2018

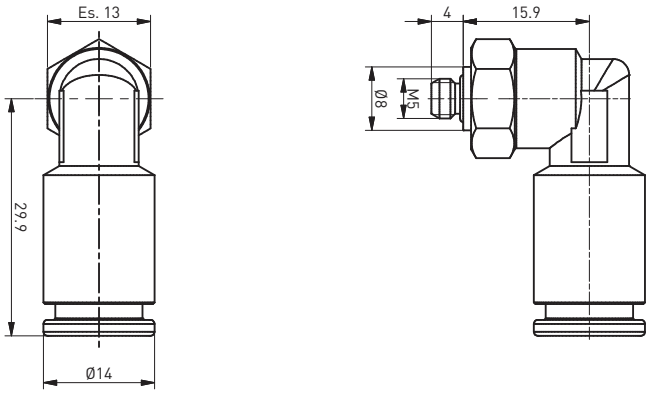

COMPLEMENTARY PRODUCTS

Technical information are provided for informative purpose only and can be subject to change without prior notice

22AT0614

Swivel elbow male adaptor parallel

Ø6 - G1/4”

AT Series with NBR seals

REV. 00 - 15/10/2018

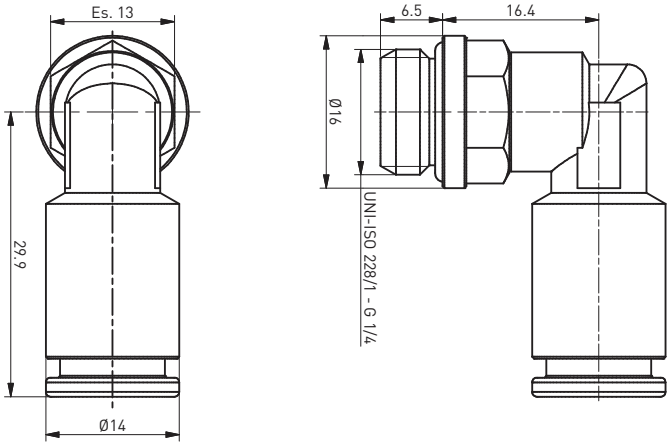

22AT0618

Swivel elbow male adaptor parallel

Ø6 - G1/8”

AT Series with NBR seals

REV. 00 - 15/10/2018

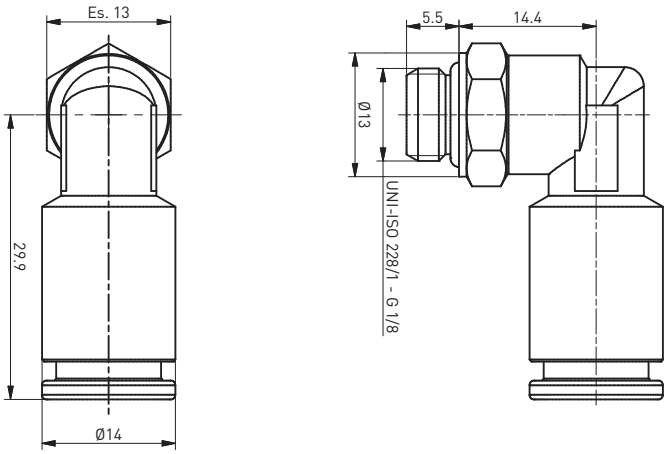

22LAT0614

Swivel longer elbow male adaptor parallel

Ø6 - G1/4”

AT Series with NBR seals

REV. 00 - 27/09/2018

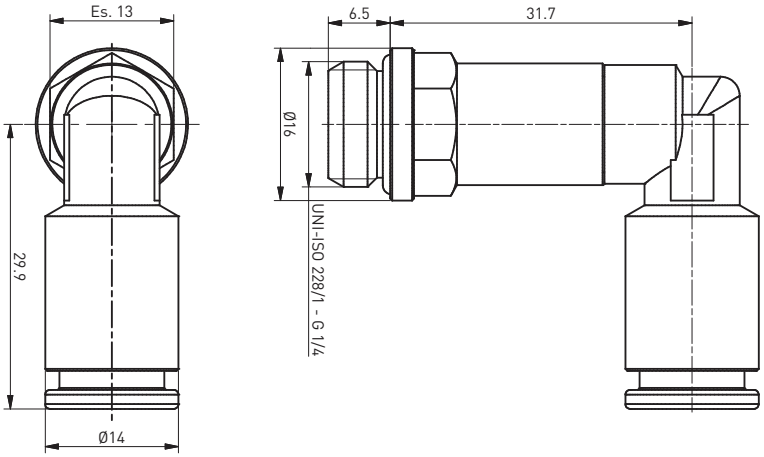

22LAT0618

REV. 00 - 15/10/2018

Swivel longer elbow male adaptor parallel

Ø6 - G1/8”

AT Series with NBR seals

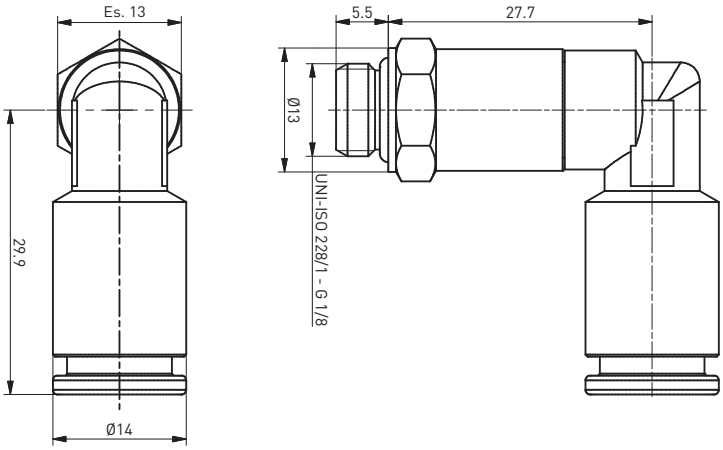

29AT0614

REV. 00 - 29/08/2018

Flow adjuster

Ø6 - G1/4”

AT Series with NBR seals

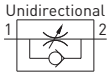

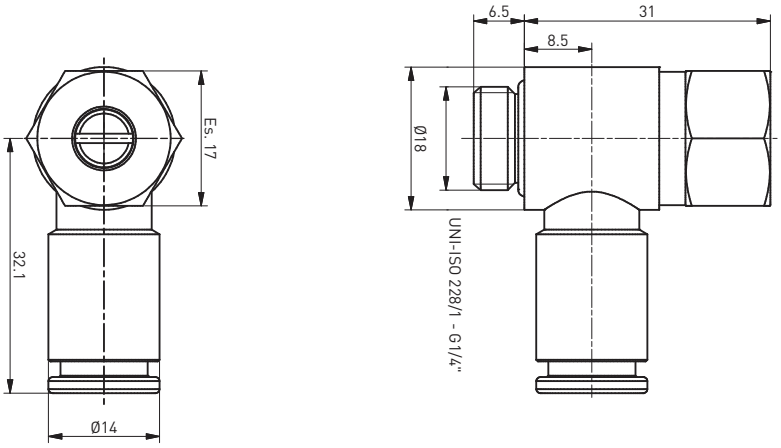

29AT0618

REV. 00 - 29/08/2018

Flow adjuster

Ø6 - G1/8”

AT Series with NBR seals

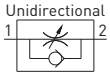

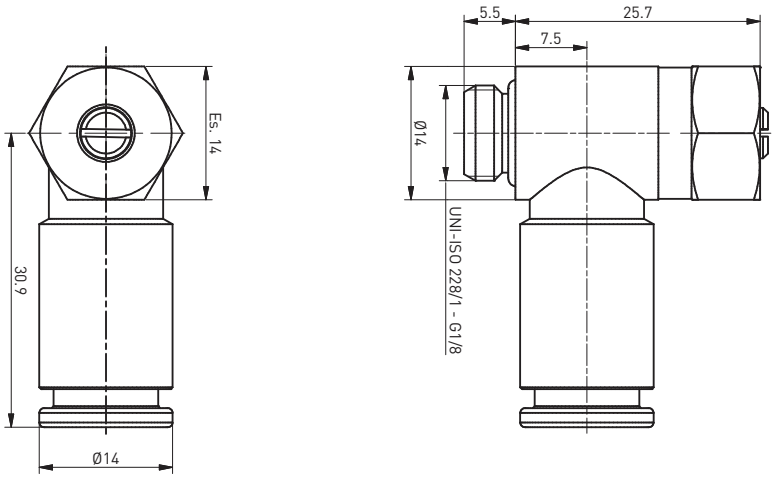

COMPLEMENTARY PRODUCTS

Technical information are provided for informative purpose only and can be subject to change without prior notice

29AT0614P

REV. 00 - 11/10/2018

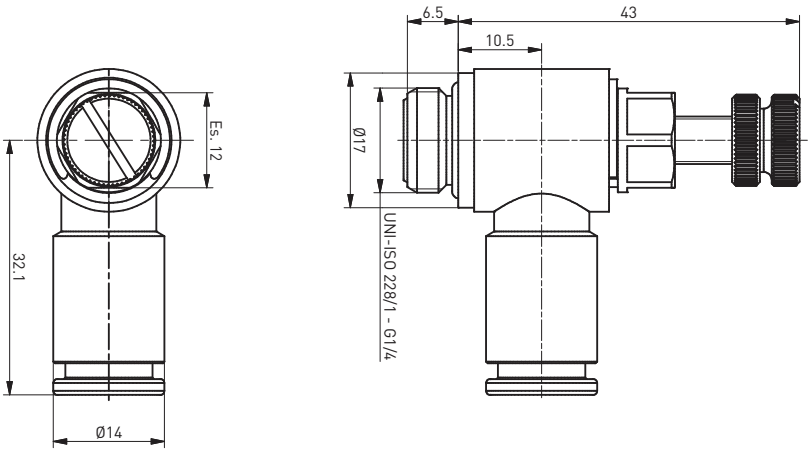

Flow adjuster

Ø6 - G1/4”

AT Series with NBR seals

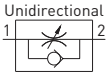

29AT0618P

REV. 00 - 11/10/2018

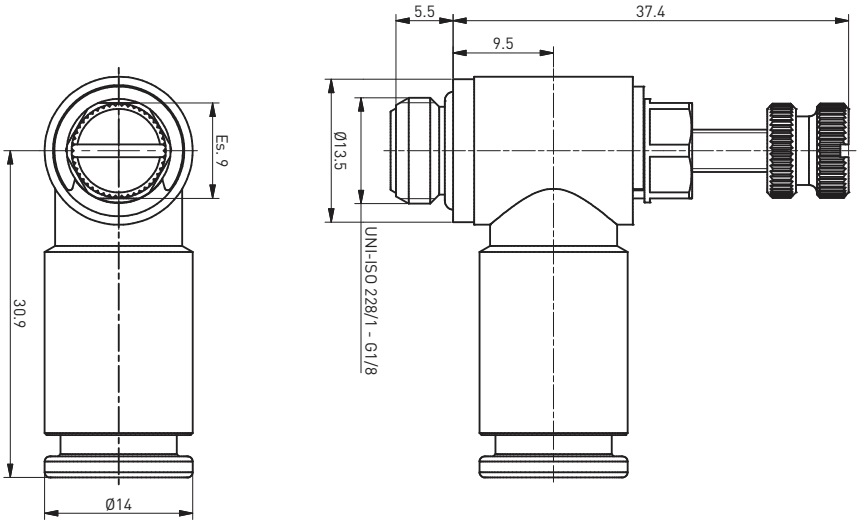

Swivel elbow male adaptor parallel

Ø6 - G1/8”

AT Series with NBR seals

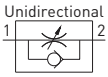

07AT0600

REV. 00 - 11/09/2018

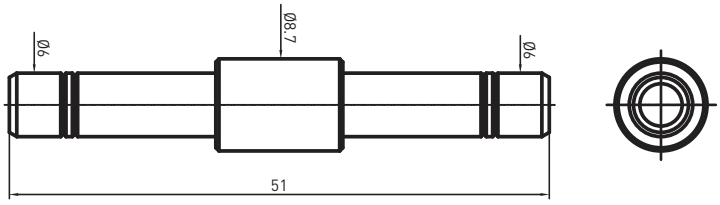

Connector

Ø6

AT Series

23AT0600

REV. 00 - 06/03/2019

Y Connector

Ø6

AT Series

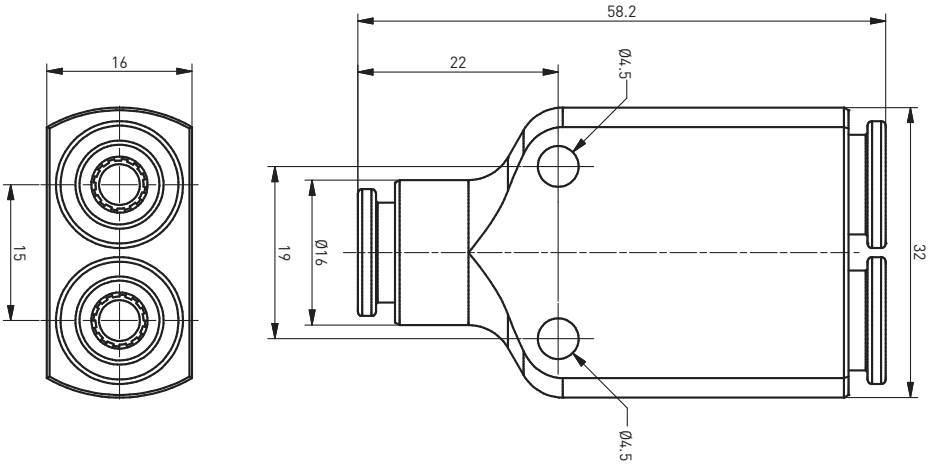

105ATM318

REV. 00 - 28/03/2018

Adaptator

M3 - 1/8''

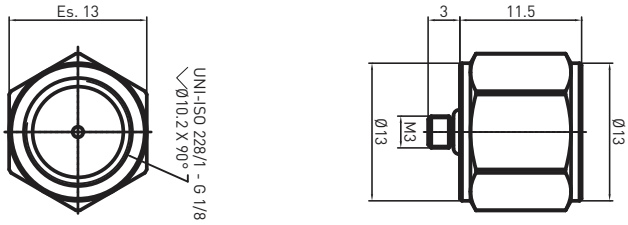

10AT0600

REV. 00 - 22/05/2019

Straight threaded connector

Ø6 - M16x1

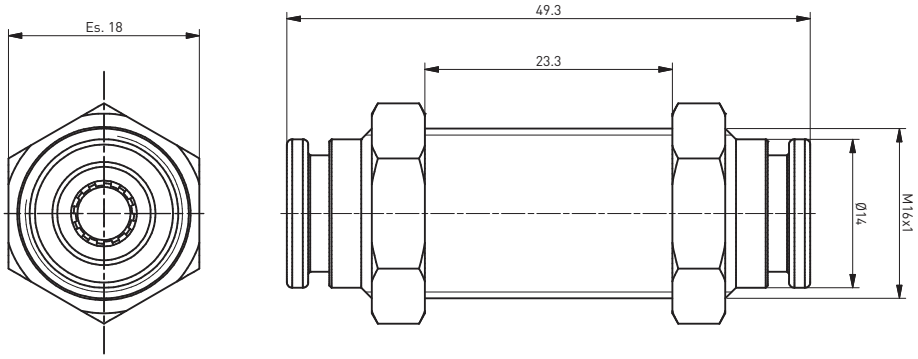

COMPLEMENTARY PRODUCTS

Technical information are provided for informative purpose only and can be subject to change without prior notice

01AT0814

REV. 00 - 08/03/2018

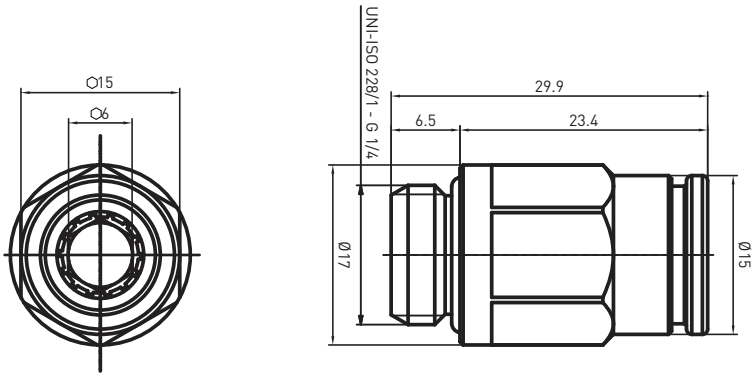

Straight fitting

Ø8 G1/4”

AT Series with NBR seals

01AT0818

REV. 00 - 29/08/2018

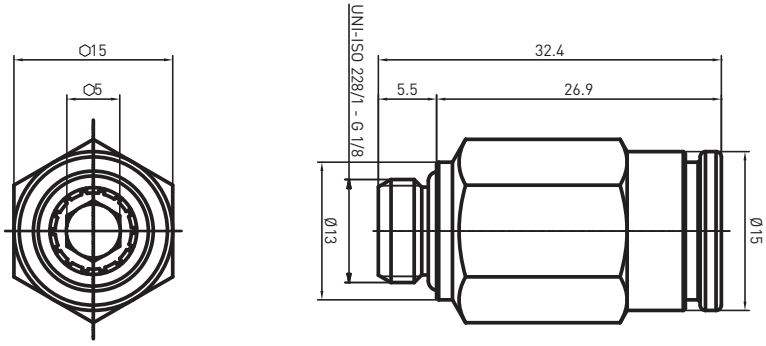

Straight fitting

Ø8 G1/8”

AT Series with NBR seals

03AT0800

REV. 00 - 03/09/2018

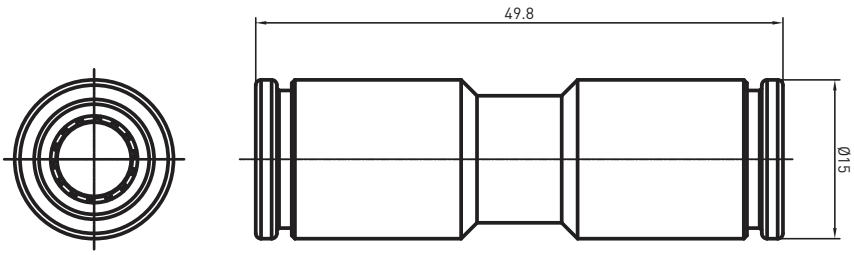

Straight connector

Ø8

AT Series with NBR seals

04AT08L0

REV. 00 - 14/10/2018

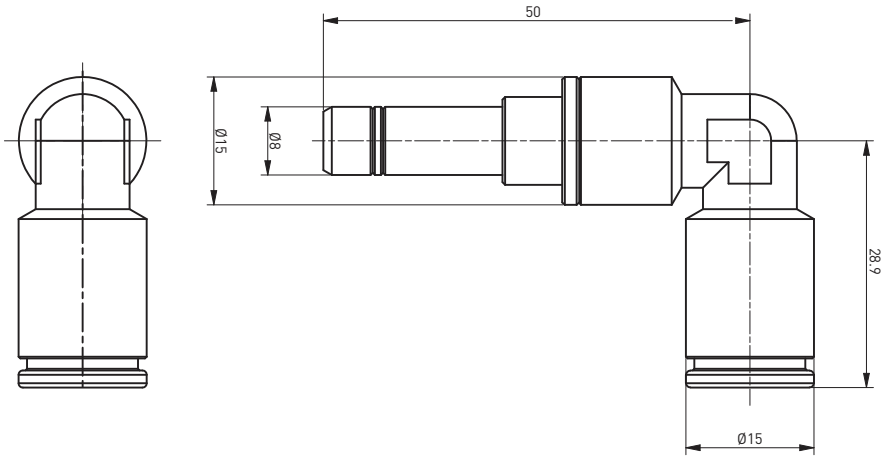

Elbow connector

Ø8

AT Series with NBR seals

05AT0800

REV. 00 - 03/12/2018

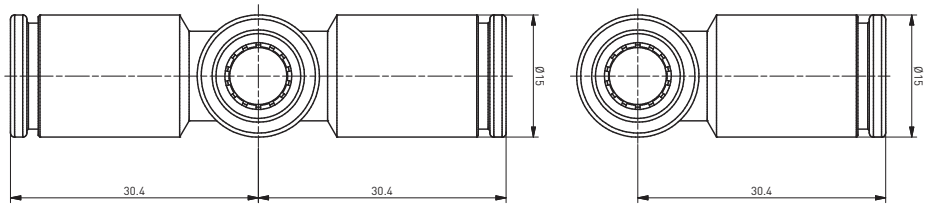

T connector

Ø8

AT Series with NBR seals

08EAT0608

REV. 00 - 22/05/2019

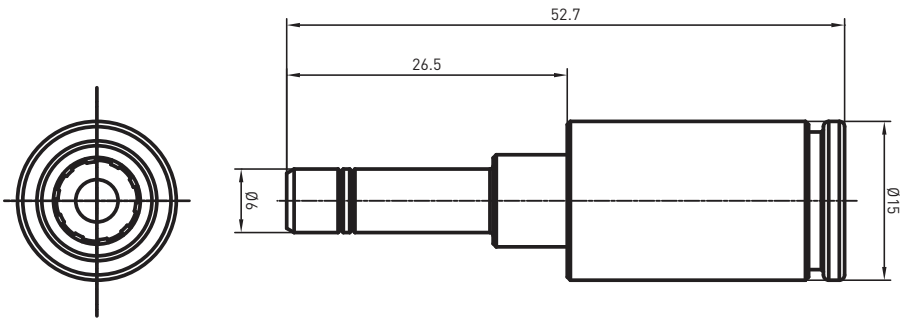

Plug-in increaser

Ø6M Ø8F

AT Series with NBR seals

Technical information are provided for informative purpose only and can be subject to change without prior notice

15AT0818

Complete single banjo

Ø8 - G1/8”

AT Series with NBR seals

REV. 00 - 30/08/2018

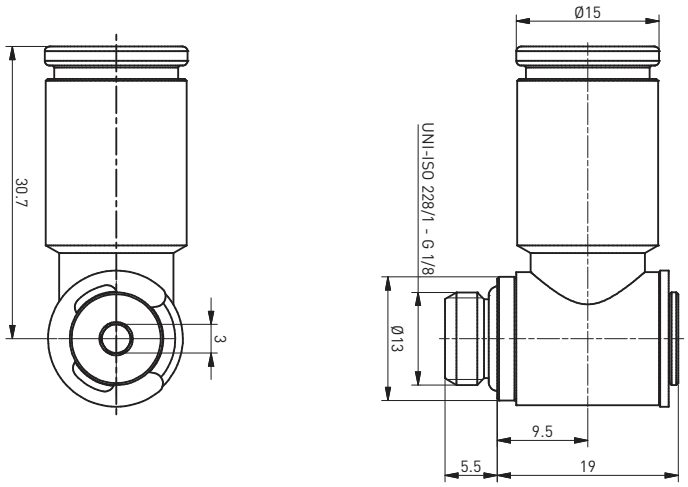

15AT0814

Complete single banjo

Ø8 - G1/4”

AT Series with NBR seals

REV. 00 - 30/08/2018

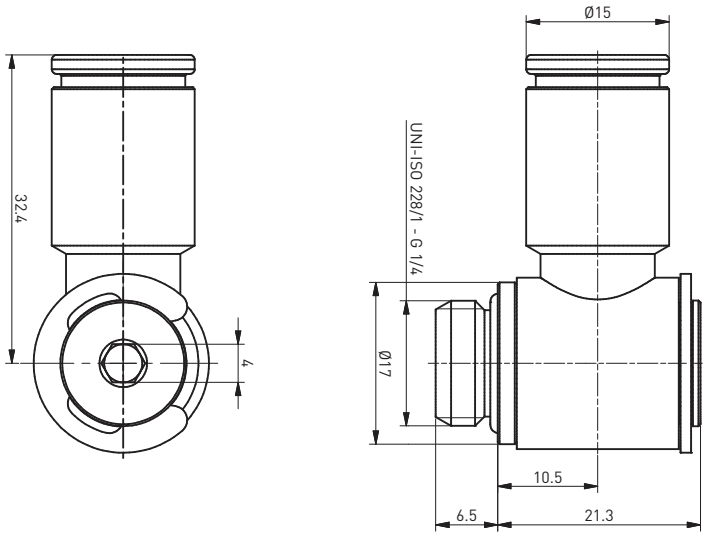

22AT0814

Swivel elbow male adaptor parallel

Ø8 - G1/4”

AT Series with NBR seals

REV. 00 - 03/12/2018

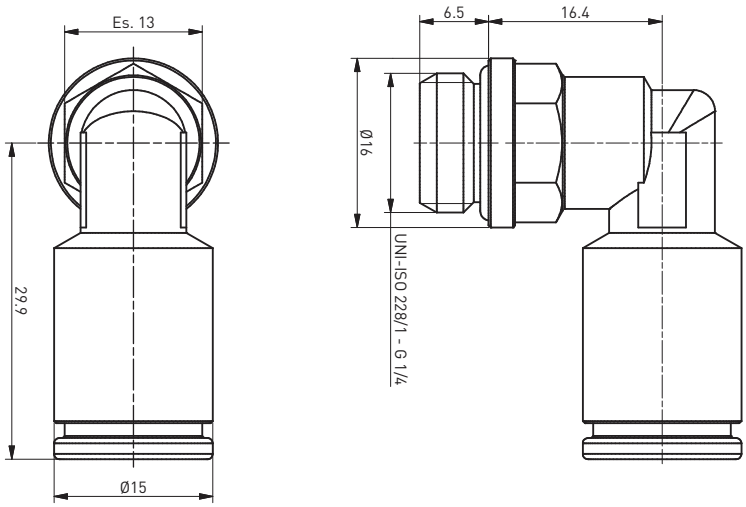

22AT0818

REV. 00 - 03/12/2018

Swivel elbow male adaptor parallel

Ø8 - G1/8”

AT Series with NBR seals

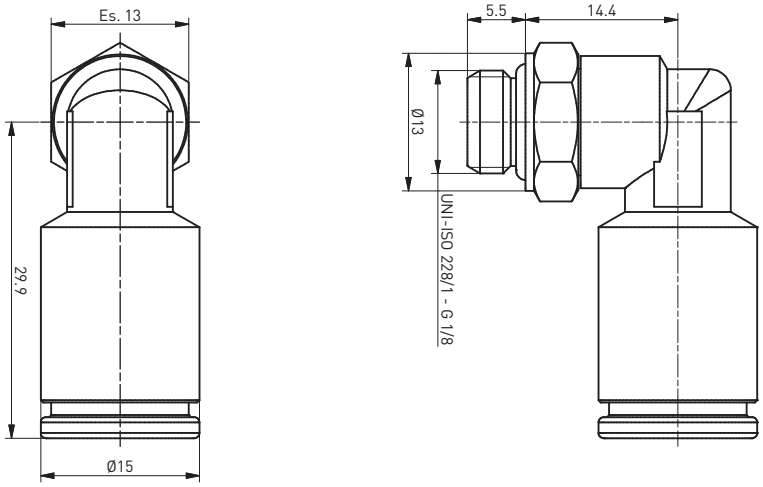

22LAT0814

REV. 00 - 30/08/2018

Swivel longer elbow male adaptor parallel

Ø8 - G1/4”

AT Series with NBR seals

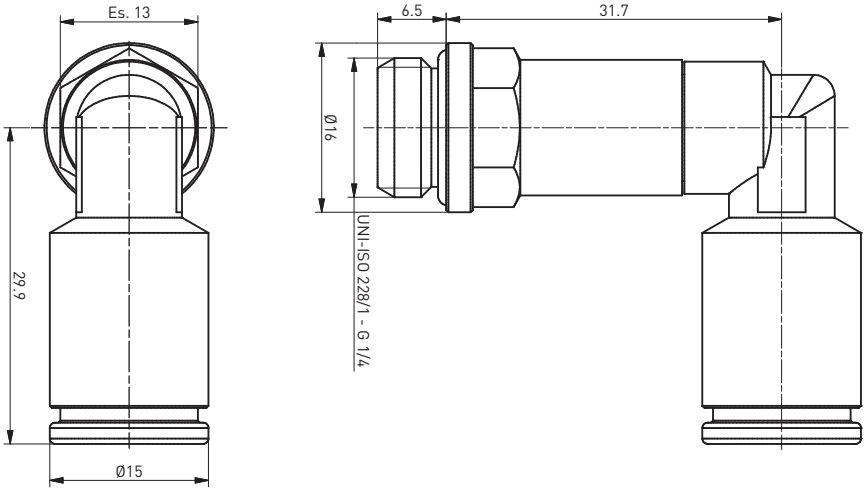

22LAT0818

REV. 00 - 30/08/2018

Swivel longer elbow male adaptor parallel

Ø8 - G1/8”

AT Series with NBR seals

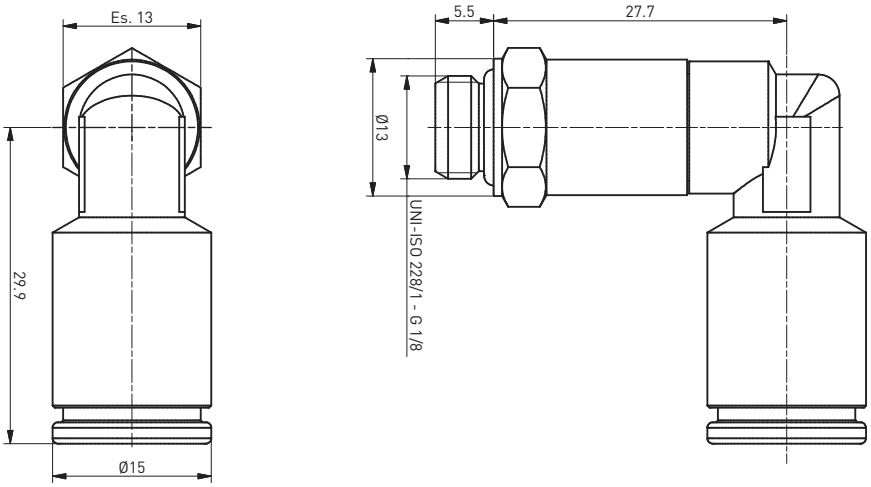

COMPLEMENTARY PRODUCTS

Technical information are provided for informative purpose only and can be subject to change without prior notice

29AT0814

REV. 00 - 29/08/2018

Flow adjuster

Ø8 - G1/4”

AT Series with NBR seals

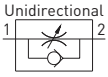

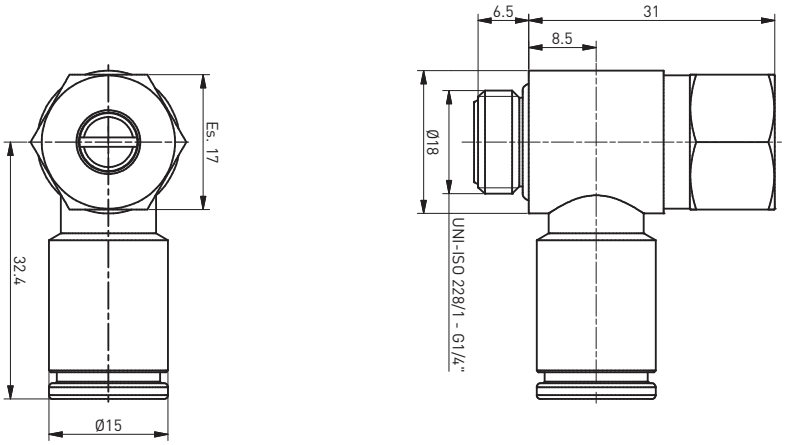

29AT0818

REV. 00 - 30/08/2018

Flow adjuster

Ø8 - G1/8”

AT Series with NBR seals

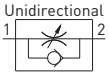

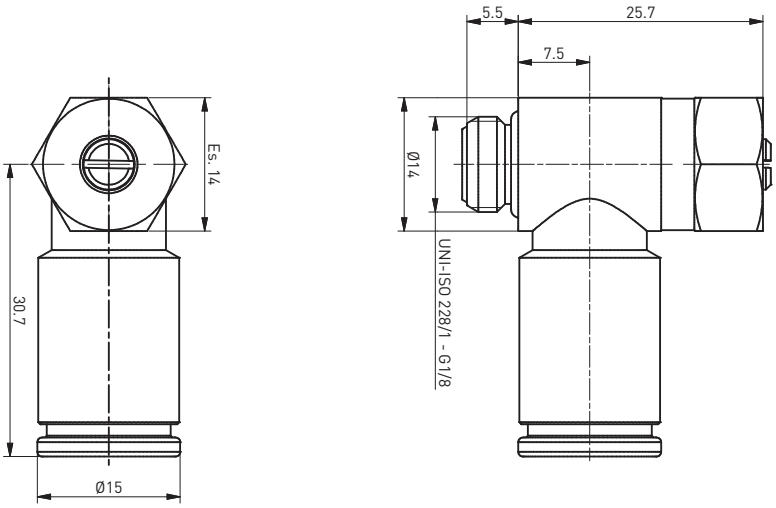

29AT0814P

REV. 00 - 11/10/2018

Flow adjuster

Ø8 - G1/4”

AT Series with NBR seals

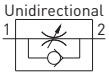

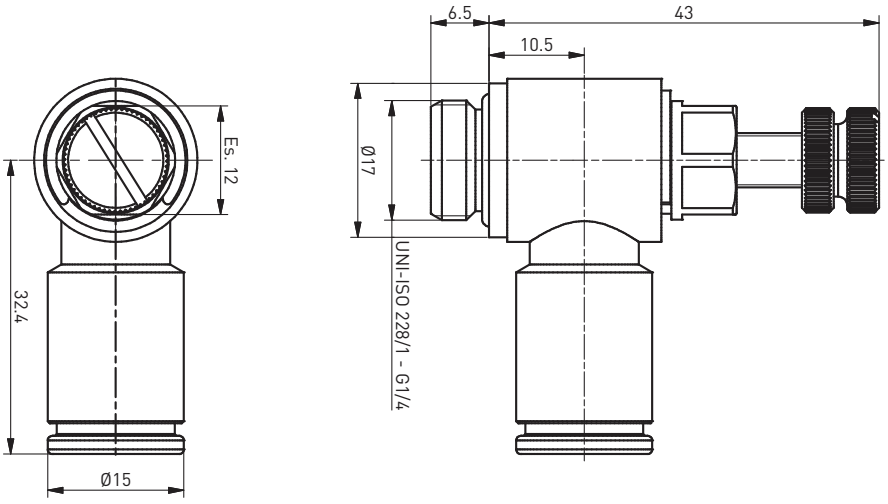

29AT0818P

REV. 00 - 11/10/2018

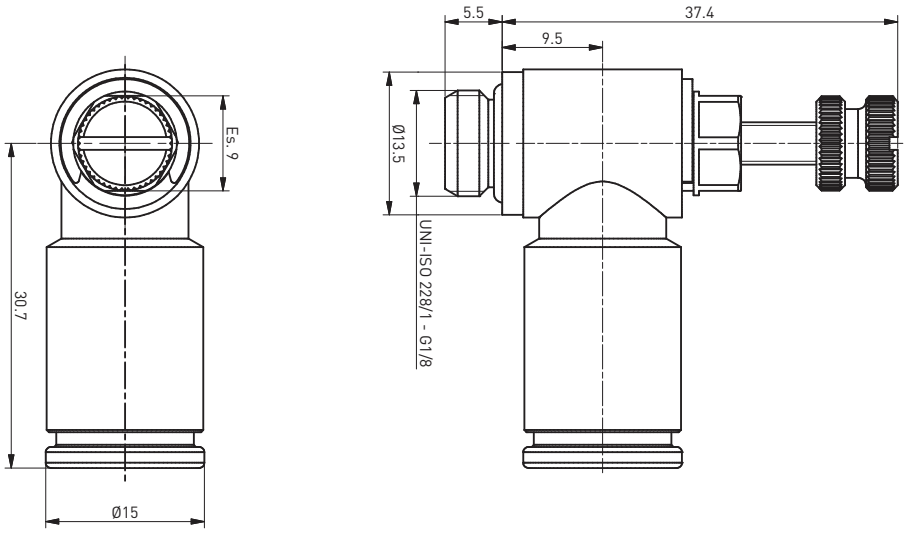

Flow adjuster

8 - G1/8”

AT Series with NBR seals

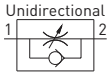

29AT0838

REV. 00 - 04/06/2019

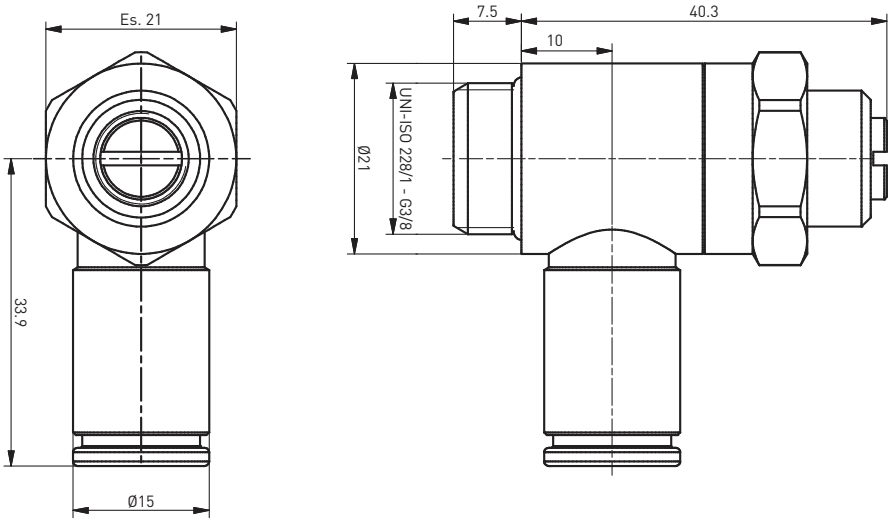

Flow adjuster

Ø8 - G3/8

07AT0800

REV. 00 - 11/09/2018

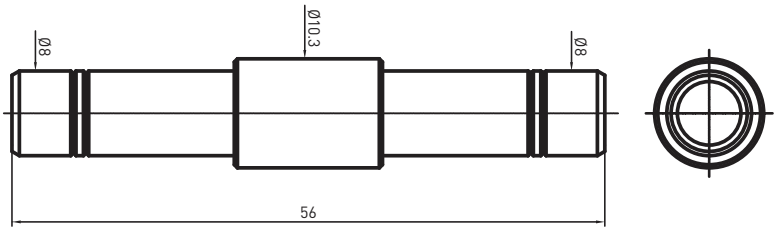

Connector

Ø8

AT Series

COMPLEMENTARY PRODUCTS

Technical information are provided for informative purpose only and can be subject to change without prior notice

23AT0800

Y Connector

Ø8

AT Series

REV. 00 - 06/03/2019

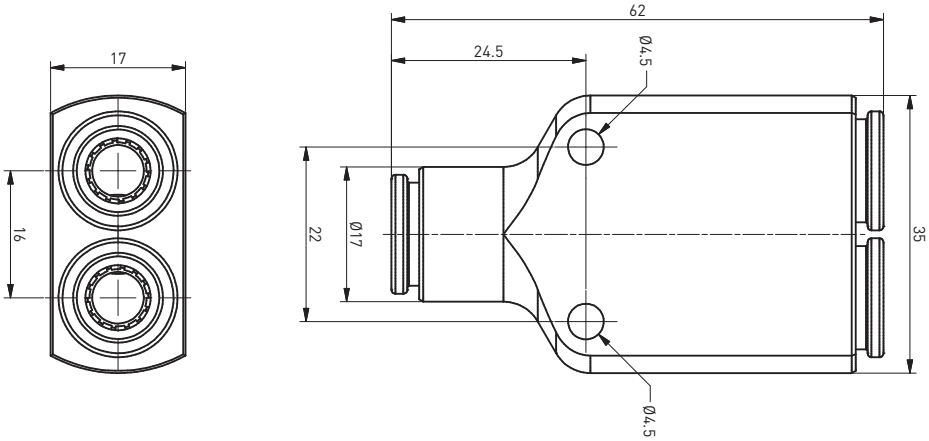

10AT0800

Straight threaded connector

Ø8 - M18x1

REV. 00 - 22/05/2019

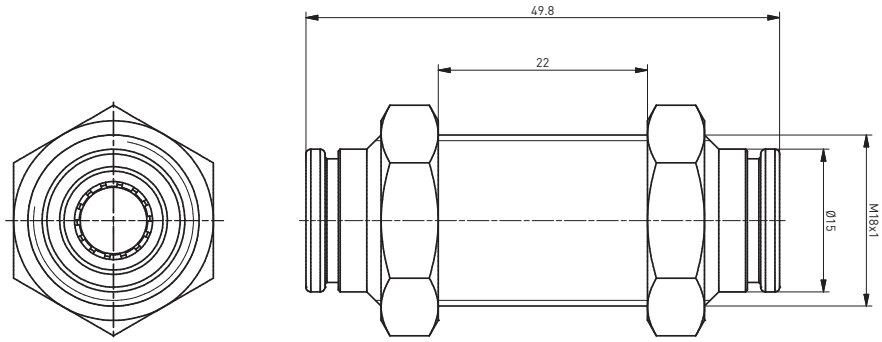

01AT1038

Straight fitting

Ø10 G3/8”

AT Series with NBR seals

REV. 00 - 28/05/2019

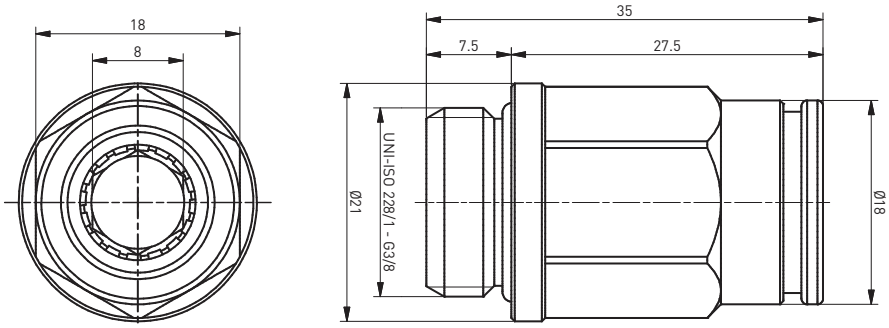

01AT1012

REV. 00 - 28/05/2019

Straight fitting

Ø10 G1/2”

AT Series with NBR seals

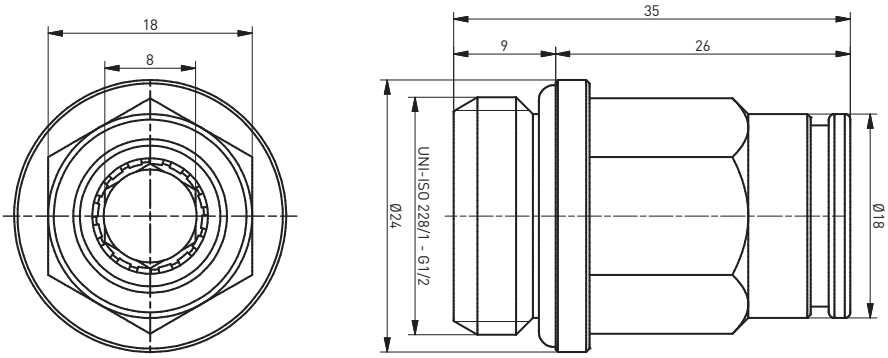

03FAT1000

REV. 00 - 27/05/2019

Straight threaded connector

Ø10

AT Series with NBR seals

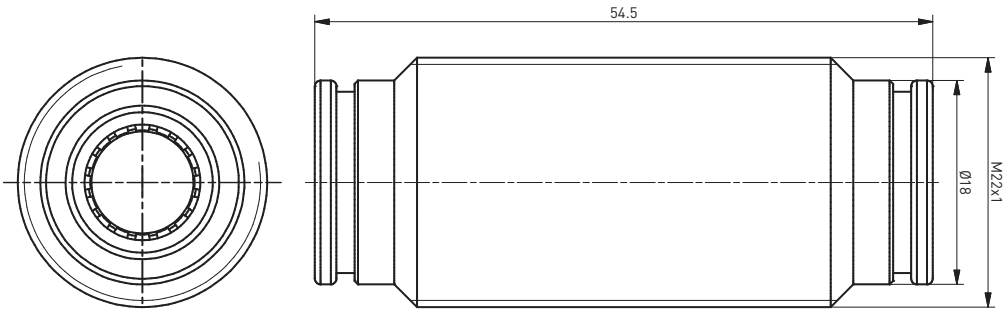

05AT1000

REV. 00 - 28/05/2019

T connector

Ø10

AT Series with NBR seals

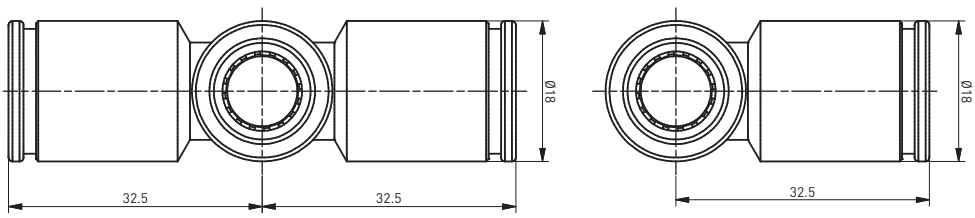

Technical information are provided for informative purpose only and can be subject to change without prior notice

07AT1000

Connector

Ø10

AT Series

REV. 00 - 28/05/2019

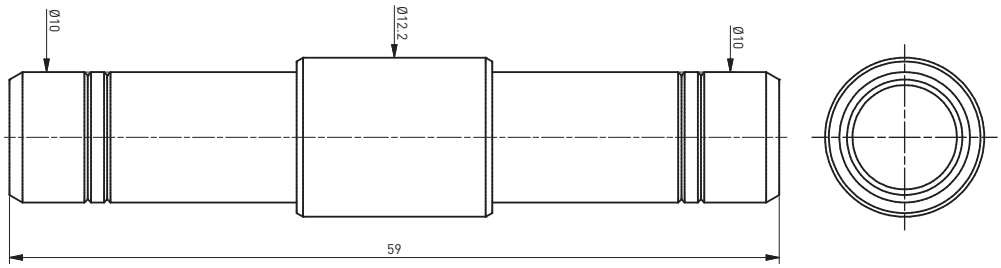

10AT1000

Bulkhead connector

Ø10

AT Series with NBR seals

REV. 00 - 27/05/2019

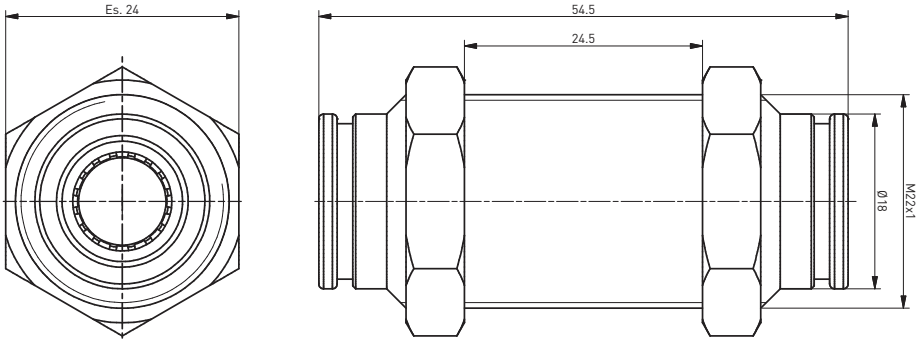

15AT1038

Complete single banjo

Ø10 - G3/8”

AT Series with NBR seals

REV. 00 - 30/08/2018

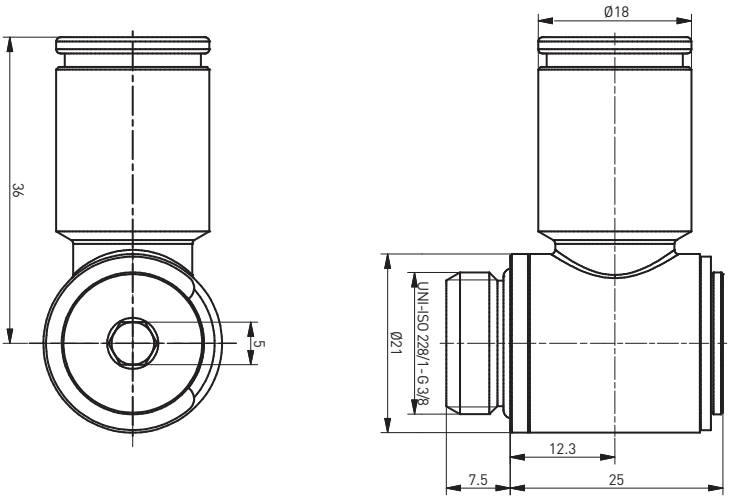

COMPLEMENTARY PRODUCTS

22AT1038

Swivel elbow male adaptor parallel

Ø10 - G3/8”

AT Series with NBR seals

REV. 00 - 04/06/2019

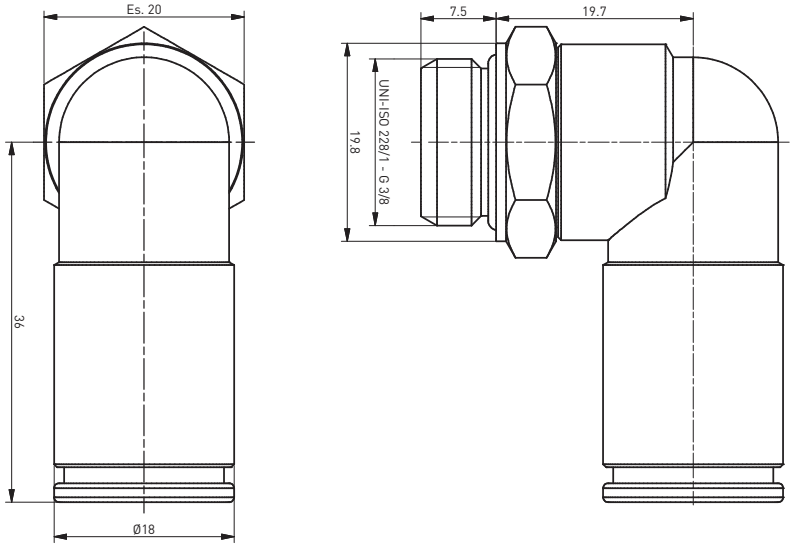

22AT1012

Swivel elbow male adaptor parallel

Ø10 - G1/2”

AT Series with NBR seals

REV. 00 - 04/06/2019

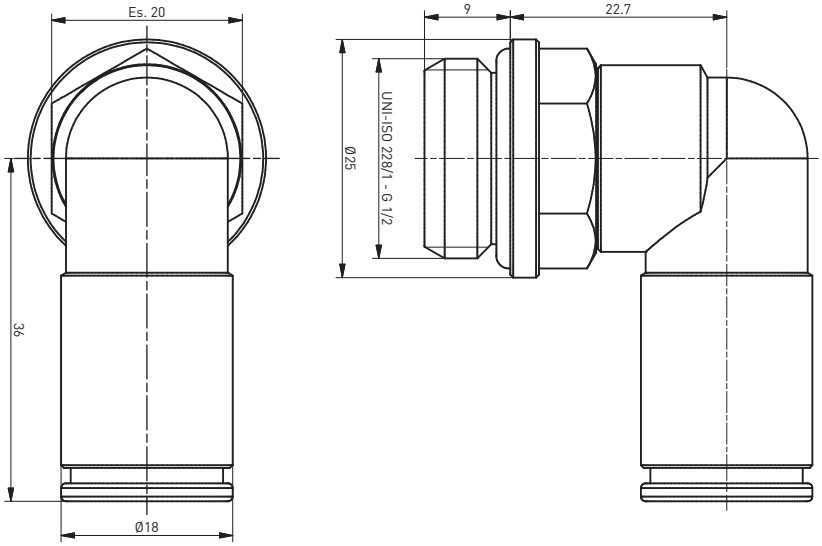

29AT1038

Flow adjuster

Ø10 - G3/8’’

AT Series with NBR seals

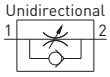

REV. 00 - 04/06/2019

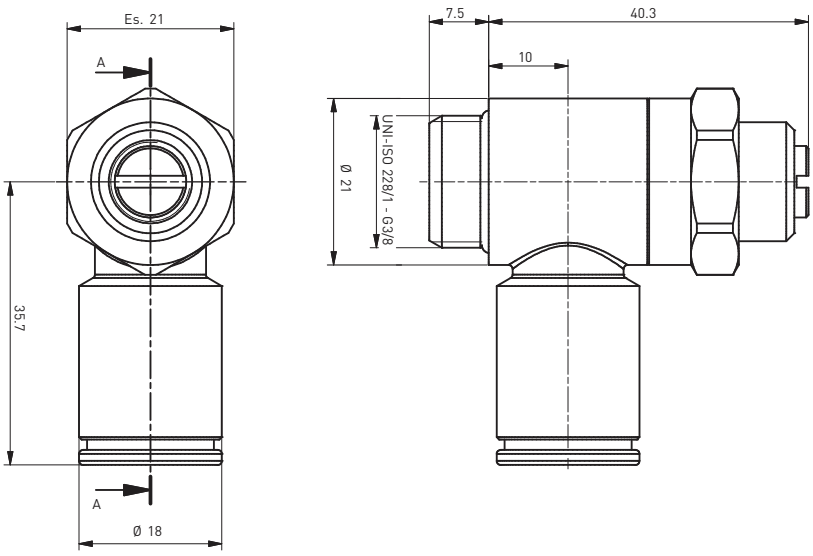

COMPLEMENTARY PRODUCTS

Technical information are provided for informative purpose only and can be subject to change without prior notice

6.01.05.F

Function F **180** = Unidirectional **180/2** = Bidirectional

Fluid	Filtered air
Max working pressure (bar)	10
Temperature °C	-5 /+70
Orifice size (mm)	2

WEIGHT 52 g

REV. 00 - 31/03/2015

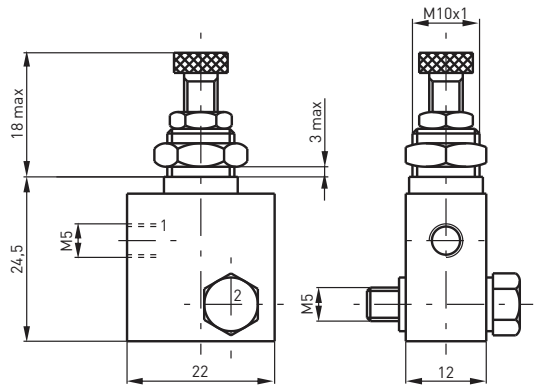

Flow control valve M5 with a through bolt

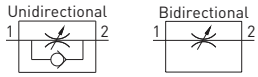

6.01.18/F

Function F **4** = Unidirectional **5** = Bidirectional

Fluid	Filtered air
Max working pressure (bar)	10
Temperature °C	-5 /+70
Orifice size (mm)	3

WEIGHT 100 g

REV. 00 - 31/03/2015

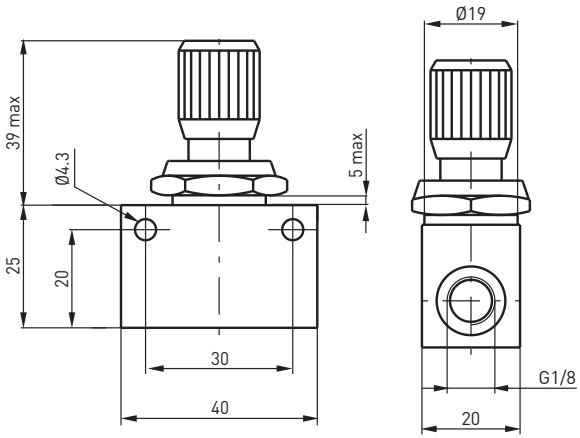

Flow control valve M5 with a through bolt

G1/8”

Ultrasensitive

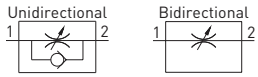

6.01.18/F

Function F **6** = Unidirectional **7** = Bidirectional

Fluid	Filtered air
Max working pressure (bar)	10
Temperature °C	-5 /+70
Orifice size (mm)	3

WEIGHT 105 g

REV. 00 - 31/03/2015

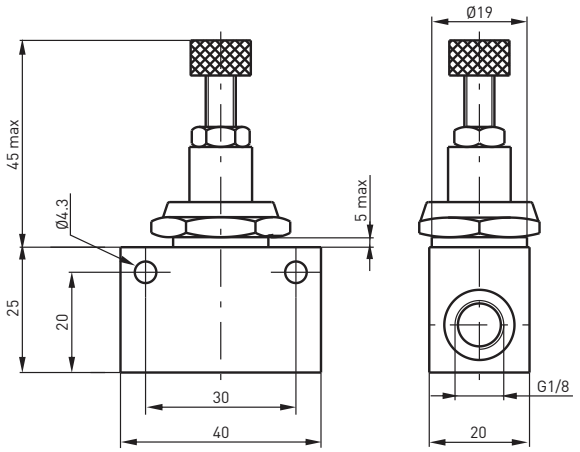

Flow control valve

G1/8”

Ultrasensitive with lock nut

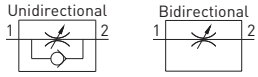

6.01.F

Function F

18N = Unidirectional
18/1N = Bidirectional
18NE = Unidirectional economic version
18/1NE = Bidirectional economic version

Fluid	Filtered air
Max working pressure (bar)	10
Temperature °C	-5 /+70
Orifice size (mm)	4

WEIGHT 50 g

REV. 00 - 31/03/2015

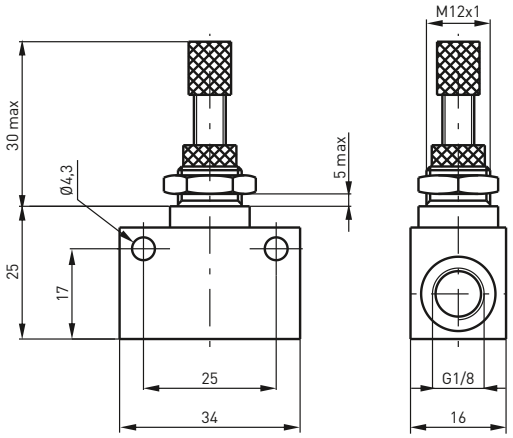

Flow control valve

G1/8”

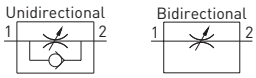

6.01.14/1

Fluid	Filtered air
Max working pressure (bar)	10
Temperature °C	-5 /+70
Orifice size (mm)	5.5

WEIGHT 100 g

REV. 00 - 31/03/2015

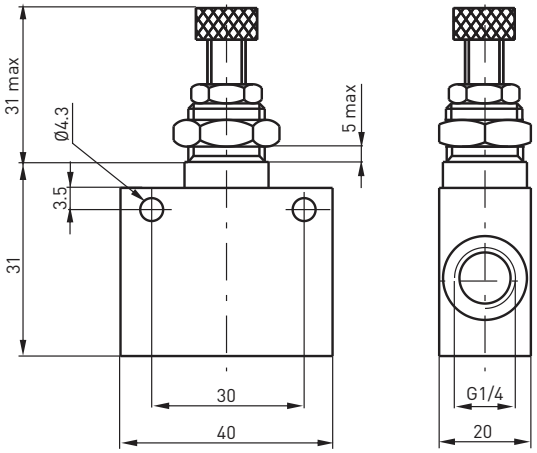

Flow control valve

G1/4”

Compact type unidirectional

6.01.F

Function F

14N = Bidirectional
14/1N = Bidirectional economic version

Fluid	Filtered air
Max working pressure (bar)	10
Temperature °C	-5 /+70
Orifice size (mm)	7

WEIGHT 105 g

REV. 00 - 31/03/2015

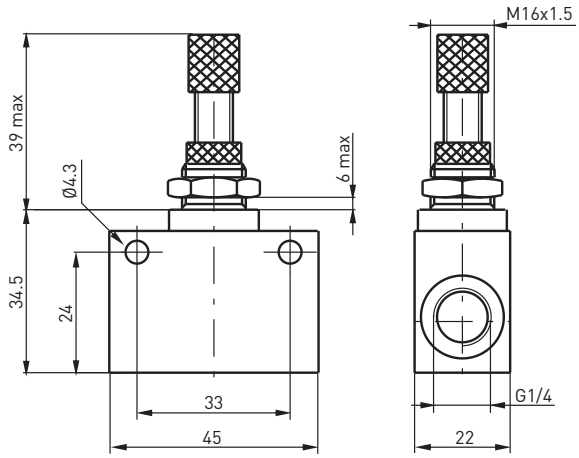

Flow control valve

G1/4”

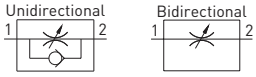

COMPLEMENTARY PRODUCTS

Technical information are provided for informative purpose only and can be subject to change without prior notice

6.01.F

Function F **12N** = Bidirectional **12/1N** = Bidirectional economic version

Fluid	Filtered air
Max working pressure (bar)	10
Temperature °C	-5 /+70
Orifice size (mm)	12

WEIGHT 290 g

REV. 00 - 31/03/2015

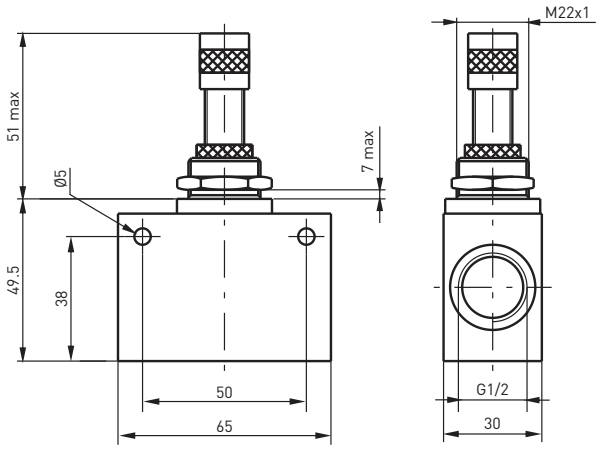

Flow control valve

G1/2”

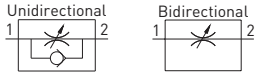

06.01.34

Fluid	Filtered air
Working pressure (bar)	0,5 ÷ 10
Temperature °C	-5 /+70
Orifice size (mm)	12

WEIGHT 500 g

REV. 00 - 31/03/2015

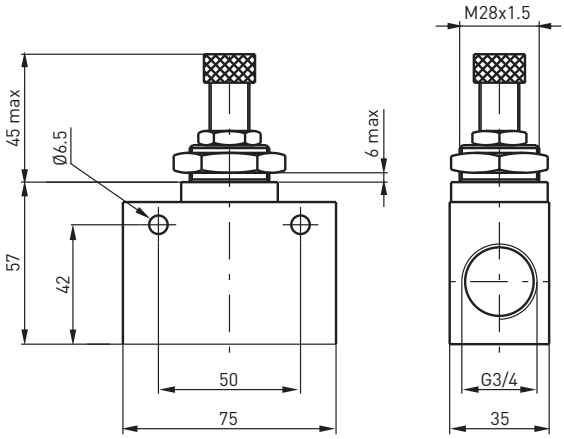

Flow control valve

G3/4”

Unidirectional

6.02.I

Connection I **05** =M5 **18** = G1/8” **14** = G1/4” **12** = G1/2”

Fluid	Filtered air
Working pressure (bar)	0,5 ÷ 10
Temperature °C	-5 /+70

G	M5	1/8”	1/4”	1/2”
B	22	32	35	52
C	12	20	25	37
D	28	38	50	62
Weight (g)	50	62	112	310
Flow rate Nl/min at 6 bar with Δp=1 (from 1 to 2)	29	33,2	34	39
Flow rate Nl/min at 6 bar on free exhaust (from 2 to 3)	29	33,2	34	39

REV. 00 - 31/03/2015

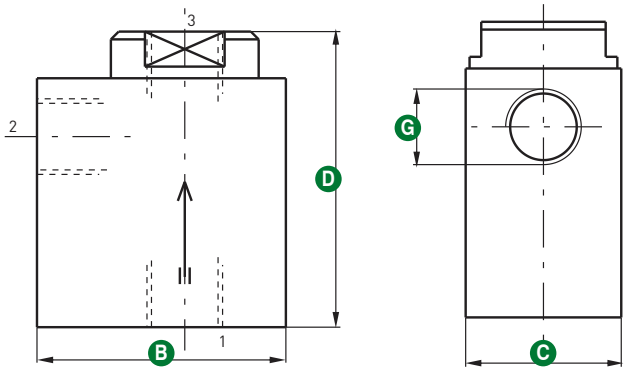

Quick exhaust valve

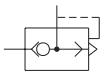

COMPLEMENTARY PRODUCTS

6.02.I.C.L

Connection (in) I — **M** = M5 **03** = tube Ø3 **04** = tube Ø4 **06** = tube Ø6

Connection (out) C — **M5** = M5 **M7** = M7 **18** = G1/8" **I** **04** = tube Ø4 **06** = tube Ø6

Fluid	Filtered air
Max working pressure (bar)	10
Temperature °C	-5 /+70

REV. 00 - 31/03/2015

Quick exhaust in line valve

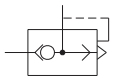

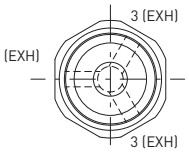

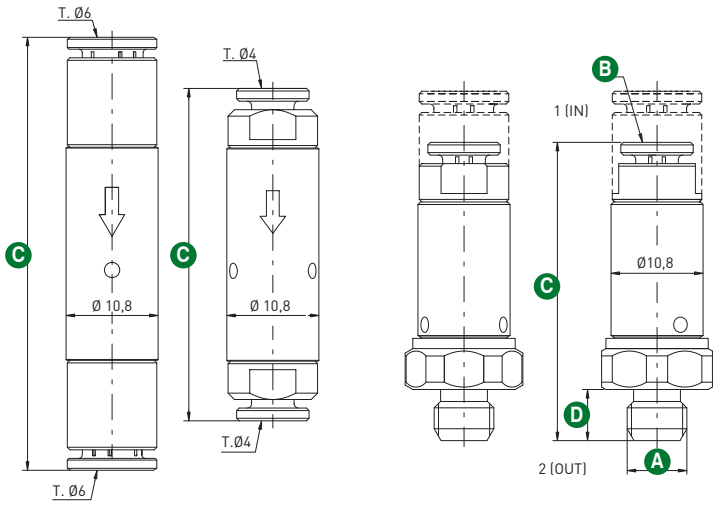

A	M5				M7				G1/8"					Ø4		Ø6	
B	M5	Ø3	Ø4	Ø6	M5	Ø3	Ø4	Ø6	M5	Ø3	Ø4	Ø6	G1/8"	Ø4	G1/8"	Ø6	G1/8"
C	29	33,2	34	39	30,5	34,7	35	40	30,5	34,7	35	40	35,5	39	39,5	51	45
D	4,5				6									–	5,5	–	5,5
Weight (g)	17								18					17		20	18
Flow rate Nl/min at 6 bar with Δp=1 (from 1 to 2)	90				110									90		110	
Flow rate Nl/min at 6 bar on free exhaust (from 2 to 3)	240				350									240		350	

6.04.I

Connection I — **05** = M5 **18** = G1/8" **14** = G1/4"

Fluid	Filtered air
Max working pressure (bar)	10
Temperature °C	-5 /+70

REV. 00 - 31/03/2015

Shuttle valve "OR"

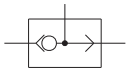

G	M5	1/8"	1/4"
A	27	44	62
B	12	16	22
C	17	25	30
D	15	25	35
ØE	3.5	4.5	5.5
F	3.5	4.5	5.5
Weight (g)	33	50	110
Flow rate Nl/min at 6 bar with Δp=1	110	700	2200

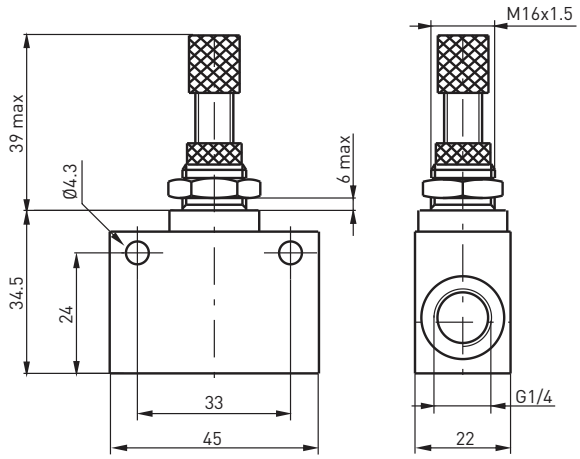

COMPLEMENTARY PRODUCTS

Technical information are provided for informative purpose only and can be subject to change without prior notice

6.04.04

Fluid	Filtered and lubricated air
Max working pressure (bar)	10
Temperature °C	-5 /+70
Flow rate at 6 bar with Δp=1 (Nl/min)	105
Orifice size (mm)	2.5
Connections	Fitting T = 4

Shuttle valve "OR"

T=4

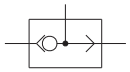

WEIGHT 50 g

REV. 00 - 31/03/2015

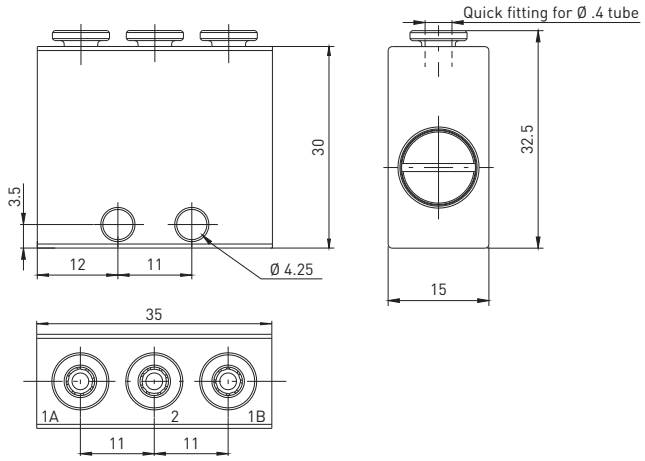

6.07.18.G

Seals G **R** = NBR **VR** = FPM

Fluid	Filtered air
Working pressure (bar)	0,5 ÷ 10
Temperature °C	-5 /+70
Flow rate at 6 bar with Δp=1 (Nl/min)	100

G 1/8" compact check valves

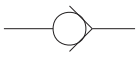

WEIGHT 50 g

REV. 00 - 31/03/2015

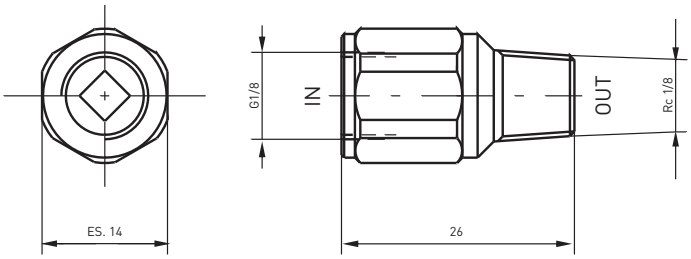

6.07.T

Poppet T **05** = NBR - M5 **18** = NBR - G 1/8" **14** = NBR - G 1/4" **38** = NBR - G 3/8" **12** = NBR - G 1/2"
18V = FPM - G 1/8" **14V** = FPM - G 1/4" **38V** = FPM - G 3/8" **12V** = FPM - G 1/2"

Fluid	Filtered and lubricated air
Working pressure (bar)	10
Temperature °C	-5 /+70 (+150°C FPM)

G	M5	1/8"	1/4"	3/8"	1/2"
E	10	14	17	21	25
L	21	37	48	50	60
Weight (g)	14	35	60	85	136
Flow rate Nl/min at 6 bar with Δp=1	160	650	1150	2600	3500

Non return valve

REV. 00 - 31/03/2015

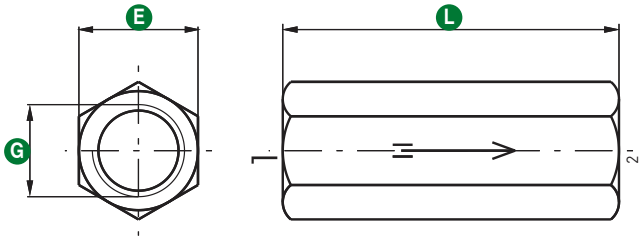

COMPLEMENTARY PRODUCTS

6.08.C/4

Connection C **05** = M5 **18** = G 1/8" **14** = G 1/4" **38** = G 3/8" **12** = G 1/2"

REV. 00 - 31/03/2015

Manifold 4 ports

Fluid	Filtered air
Max working pressure (bar)	20
Temperature °C	-5 /+70

G	M5	1/8"	1/4"	3/8"	1/2"
B	10	16	20	20	30
C	20	32	40	40	50
ØE	3.3	4.5	4.5	5.5	6.5
E	14	22	30	30	38
Weight (g)	28	38	68	54	135

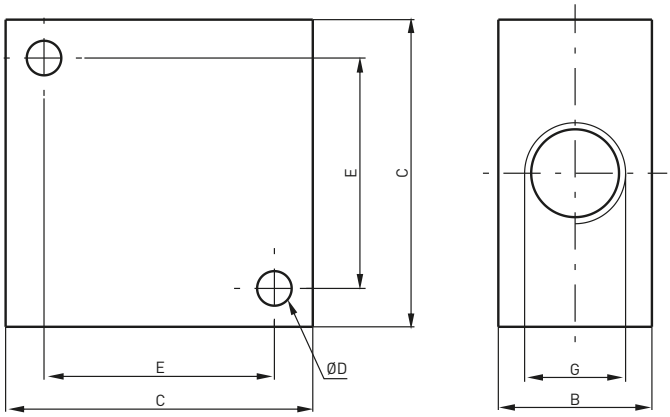

6.08.C/8

Connection C **05** = M5 **18** = G 1/8" **14** = G 1/4" **38** = G 3/8" **12** = G 1/2"

REV. 00 - 31/03/2015

Manifold 10 ports

Fluid	Filtered air
Max working pressure (bar)	20
Temperature °C	-5 /+70

G	M5	1/8"	1/4"	3/8"	1/2"
G1	G1/8"	1/8"	1/4"	3/8"	1/2"
A	16	20	28	28	36
B	12	18	20	20	30
C	60	90	115	130	170
ØD	3.3	4.5	4.5	5.5	5.5
E	50	75	98	112	150
F	22	32	40	40	50
Weight (g)	92	110	185	165	460

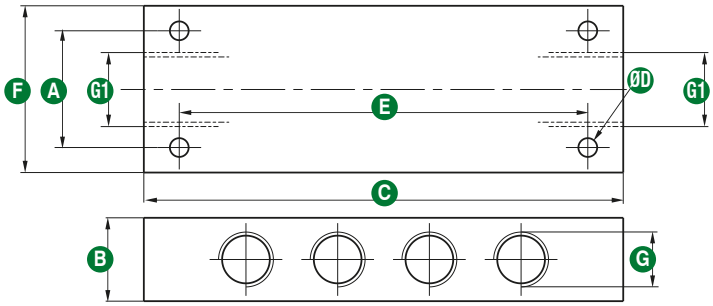

Technical information are provided for informative purpose only and can be subject to change without prior notice

6.09.14.F

Function F **UN** = Unidirectional **BN** = Bidirectional

Fluid	Filtered and lubricated air
Max working pressure (bar)	10
Min working pressure (bar)	4
Temperature °C	-5 /+70
Flow rate at 6 bar with Δp=1 (Nl/min)	700
Orifice size (mm)	7

Block valve

G1/4”

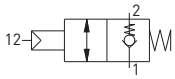

WEIGHT 122 g

REV. 00 - 31/03/2015

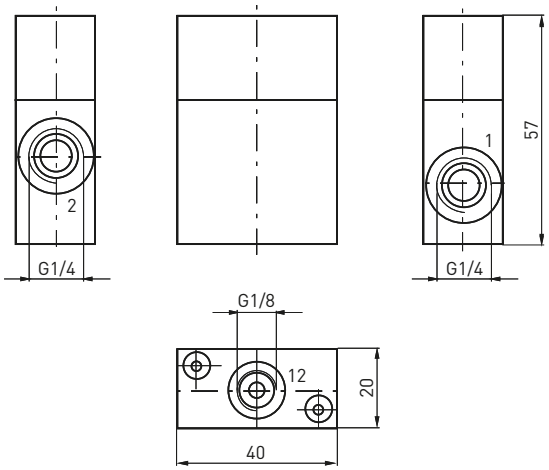

6.09.12.F

Function F **UN** = Unidirectional **BN** = Bidirectional

Fluid	Filtered and lubricated air
Max working pressure (bar)	10
Min working pressure (bar)	4
Temperature °C	-5 /+70
Flow rate at 6 bar with Δp=1 (Nl/min)	2000
Orifice size (mm)	12

Block valve

G1/2”

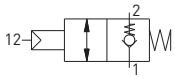

WEIGHT 305 g

REV. 00 - 31/03/2015

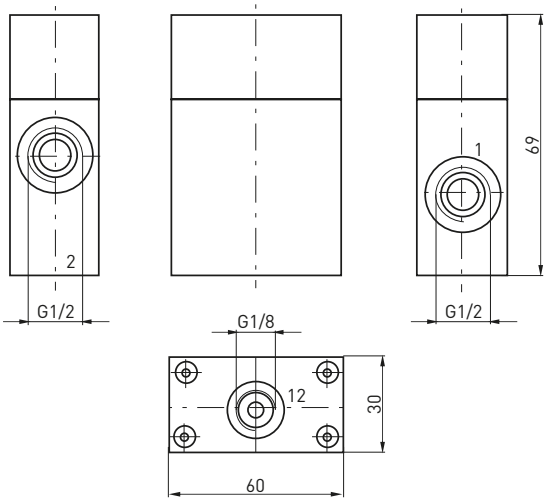

AT50C18V

Connection C **06** = Ring AT Ø6 **08** = Ring AT Ø8 **Version V** **U** = Unidirectional **B** = Bidirectional

Part. No.	ØC	L
AT500618U AT500618B	6	31
AT500818U AT500818B	8	31

Blocking valve

1/8”

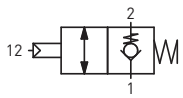

REV. 00 - 20/09/2019

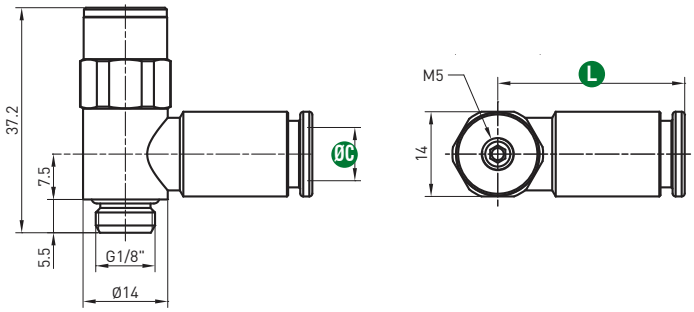

COMPLEMENTARY PRODUCTS

AT50C18PVM

Connection C 06 = Ring AT Ø6 08 = Ring AT Ø8
Pilot P 06 = Ring AT Ø6 08 = Ring AT Ø8 **Version V** U = Unidirectional B = Bidirectional

Blocking valve with manual ovveride and swivel pilot

1/8”

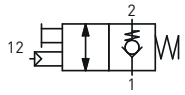

Part. No.	ØC ØP	H
AT50061806UM AT50061806BM	6	30.9
AT50081808UM AT50081808BM	8	30.7

REV. 00 - 20/09/2019

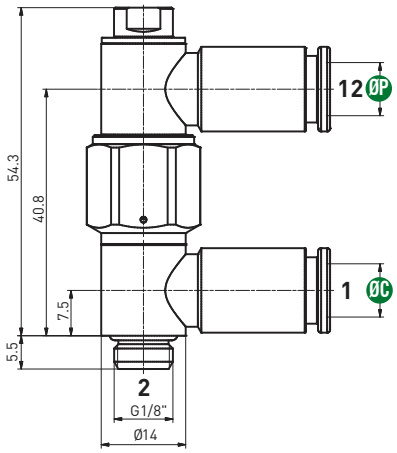

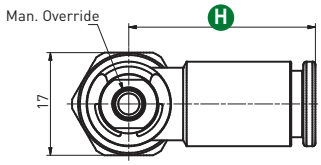

AT50C14V

Connection C 06 = Ring AT Ø6 08 = Ring AT Ø8 **Version V** U = Unidirectional B = Bidirectional

Blocking valve

1/4”

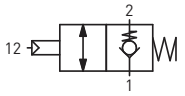

Part. No.	ØC	H
AT500614U AT500614B	6	20
AT500814U AT500814B	8	30.9

REV. 00 - 20/09/2019

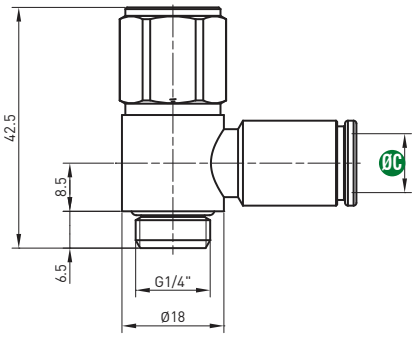

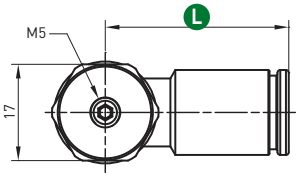

AT50C14PVM

Connection C 06 = Ring AT Ø6 08 = Ring AT Ø8
Pilot P 06 = Ring AT Ø6 08 = Ring AT Ø8 **Version V** U = Unidirectional B = Bidirectional

Blocking valve with manual ovveride and swivel pilot

1/4”

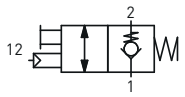

Part. No.	ØP	H	ØC	H1
AT50061406UM AT50061406BM	6	30.9	6	32.1
AT50081408UM AT50081408BM	8	30.7	8	32.4

REV. 00 - 20/09/2019

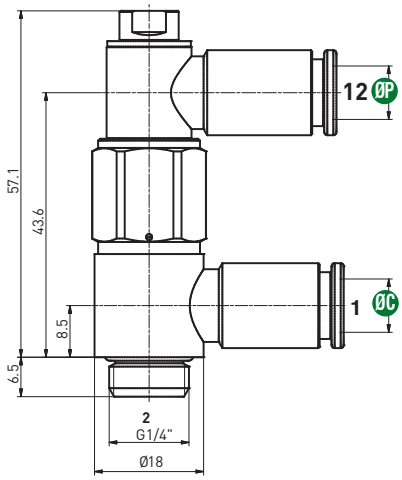

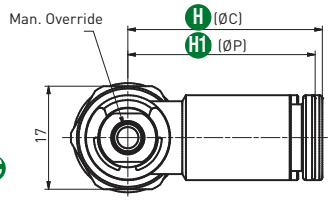

COMPLEMENTARY PRODUCTS

Technical information are provided for informative purpose only and can be subject to change without prior notice

AT50C38V

Connection C **08** = Ring AT Ø8 **10** = Ring AT Ø10 **Version V** **U** = Unidirectional **B** = Bidirectional

Blocking valve

3/8”

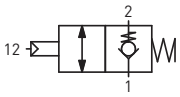

REV. 00 - 20/09/2019

Part. No.	ØC	L
AT500838U AT500838B	8	34
AT501038U AT501038B	10	36

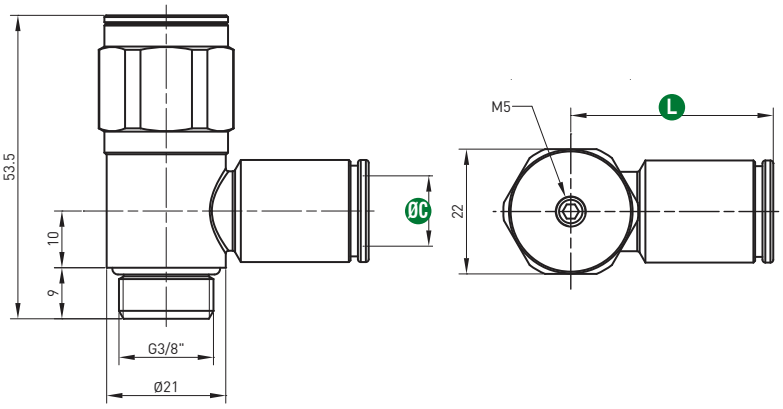

AT50C38PVM

Connection C **08** = Ring AT Ø8 **10** = Ring AT Ø10
Pilot P **06** = Ring AT Ø6 **08** = Ring AT Ø8 **Version V** **U** = Unidirectional **B** = Bidirectional

Blocking valve with manual ovveride and swivel pilot

3/8”

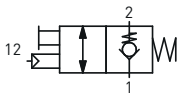

REV. 00 - 20/09/2019

Part. No.	ØP	H	ØC	H1
AT50083806UM AT50083806BM	6	30.9	8	33.9
AT50103808UM AT50103808BM	8	30.7	10	35.7

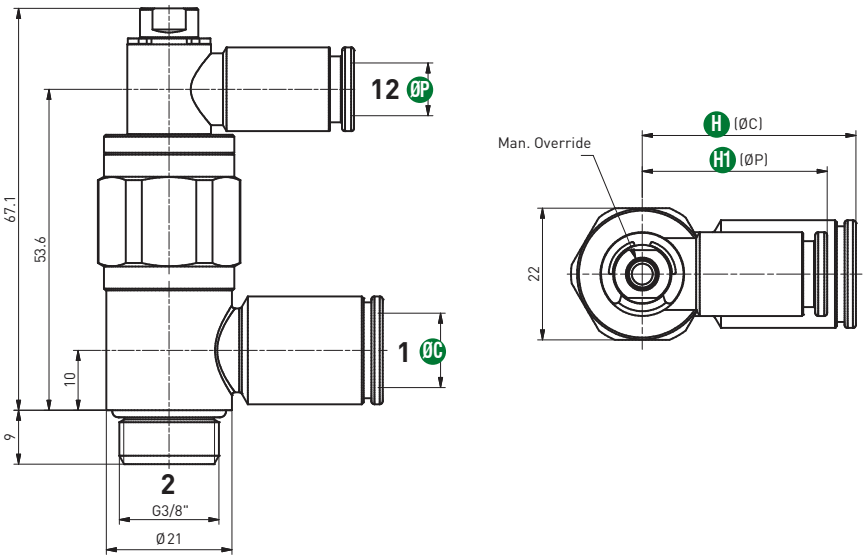

COMPLEMENTARY PRODUCTS

PNM0392

Blocking valve with manual, flow adjuster and swivel pilot for Ø8 tubes

G1/8”

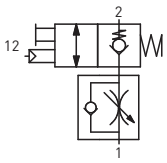

REV. 00 - 22/10/2018

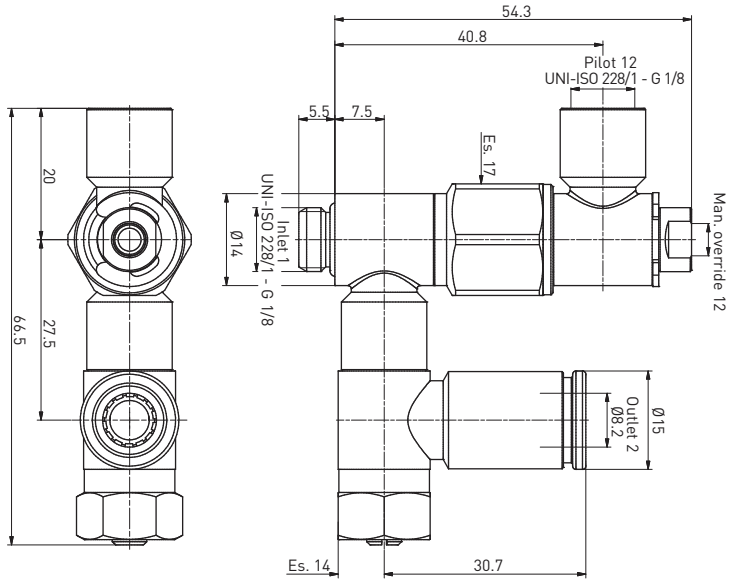

PNM0393

Blocking valve with manual, flow adjuster and swivel pilot for Ø8 tubes

G1/4”

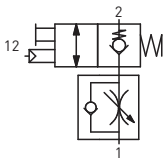

REV. 00 - 22/10/2018

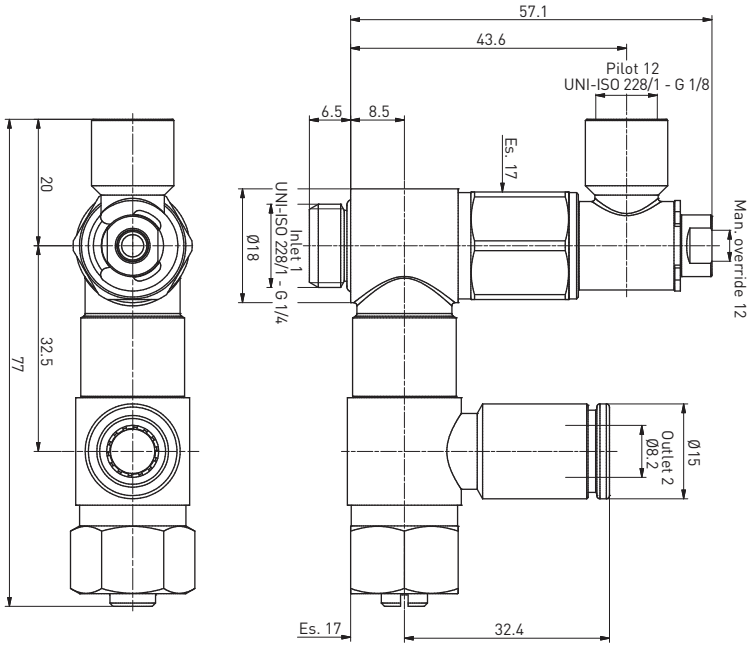

COMPLEMENTARY PRODUCTS

Technical information are provided for informative purpose only and can be subject to change without prior notice

PNM0394

Blocking valve and flow adjuster for Ø8 tubes

G1/8”

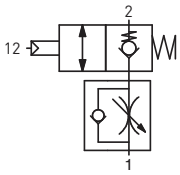

REV. 00 - 22/10/2018

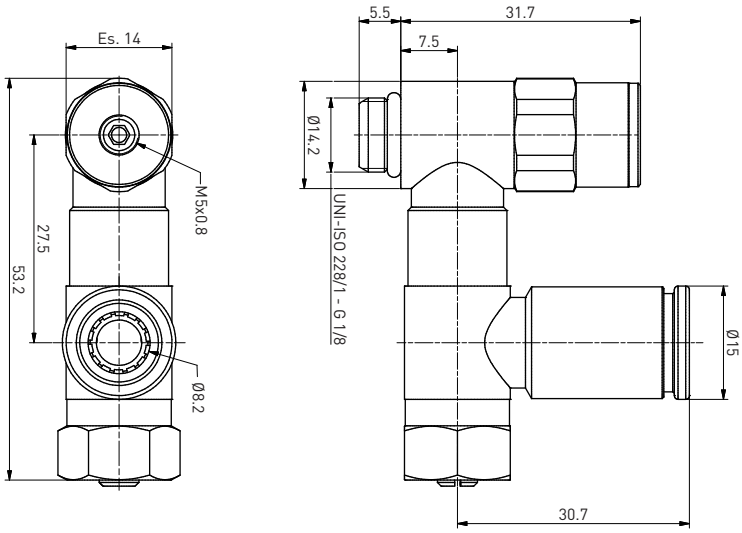

PNM0395

Blocking valve and flow adjuster for Ø8 tubes

G1/4”

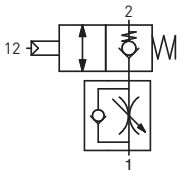

REV. 00 - 22/10/2018

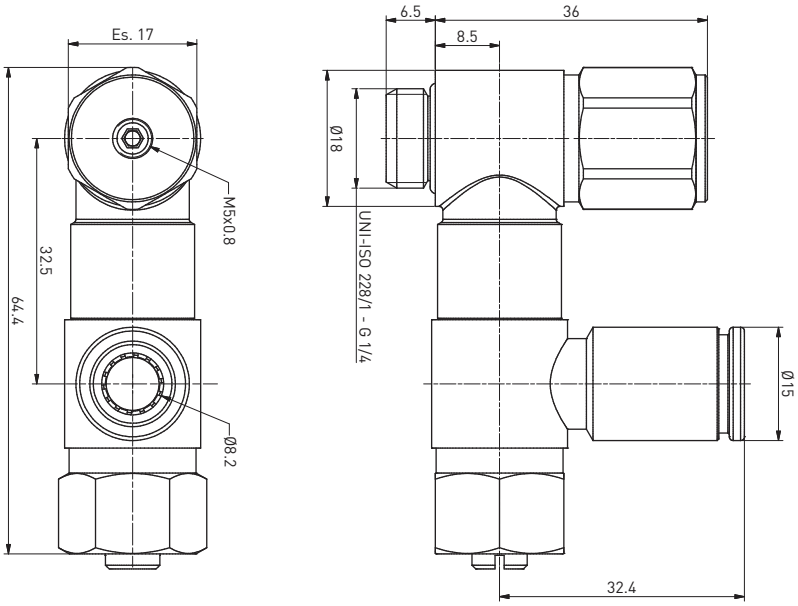

COMPLEMENTARY PRODUCTS

1390-Series

Ecolight cylinders according to ISO 15552 standard with integrated metal rodscraper

Permanent protection of the piston rod against welding debris particles: the metallic wiper constantly wipes any welding deposits off the piston rod.
The seal is made of a special FKM-based elastomer with approx. 81 shore hardness.

Technical features	
Fluid	Filtered and preferably lubricated air (if lubricated the lubrication must be continuous)
Max. pressure	10 bar

Product features	
End plates	Die-casting aluminum
Rod	C43 chromed steel
Barrel	Anodised aluminum alloy
Rod-guide bushing	Spheroid bronze on steel band with P.T.F.E. coat
Seals	Standard: NBR oil resistant rubber, PUR piston rod seals (PUR seals available upon request)
Cushion adjusting screws	Brass

Ecolight cylinders										
Bore		32	40	50	63	80	100	125	160	200
AM		22	24	32	32	40	40	54	72	72
B (d11)		30	35	40	45	45	55	60	65	75
BG		16	16	18	18	16	16	21	25	25
E		47	54	65	76	95	113	138	180	216
EE		G1/8”	G1/4”	G1/4”	G3/8”	G3/8”	G1/2”	G1/2”	G3/4”	G3/4”
G		29.5	33	32	36	38.5	41.5	48	49	49
KK		M10x1.25	M12x1.25	M16x1.5	M16x1.5	M20x1.5	M20x1.5	M27x2	M36x2	M36x2
KV		17	19	24	24	30	30	41	55	55
KW		6	7	8	8	9	9	12	18	18
L2		19	22	29	29	35	36	45	50	60
L3		4	4	5	5	/	/	/	/	/
L8		94	105	106	121	128	138	160	180	180
MM		12	16	20	20	25	25	32	40	40
PL		13	16	18	18	16	18	25	26	25
PM		3	4	5	4.5	2.5	6	8	11	11
RT		M6	M6	M8	M8	M10	M10	M12	M16	M16
SW		10	13	17	17	22	22	27	36	36
TG		32.5	38	46.5	56.5	72	89	110	140	175
VA		4	4	4	4	4	4	6	6	6
VB		33	41	51	51	65	71	75	70	75
VD		4	4	4	4	4	4	6	6	6
VF		12	12	16	16	20	20	25	30	30
VG		48	54	69	69	86	91	119	152	167
WH		26	30	37	37	46	51	65	80	95
Weight (g)	Stroke 0	460	650	1,030	1,360	2,180	2,890	5,700	11,200	14,900
	every 10 mm	23	32	45	49	75	81	130	195	245

Technical information are provided for informative purpose only and can be subject to change without prior notice

Ordering string

1390-Series

1390	050	0400	01R

1390	**VERSION**	
050	**SIZE**	**32** = Ø 32 mm **40** = Ø 40 mm **50** = Ø 50 mm **63** = Ø 63 mm **80** = Ø 80 mm
0400	**STROKE**	**From 0 to 150 mm** = every 25 mm **From 150 to 500 mm** = every 50 mm **From 500 to 1000 mm** = every 100 mm
01R	**SPECIFICATION**	**01R** = chromed rod; with metal rodscraper

1390 / Ecolight cylinders

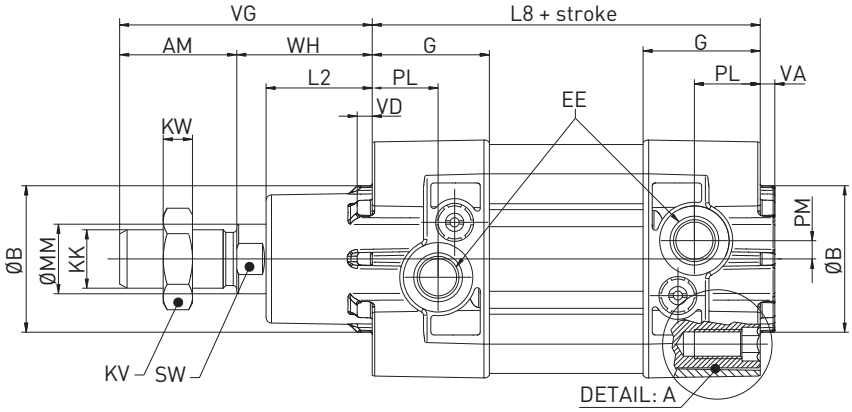

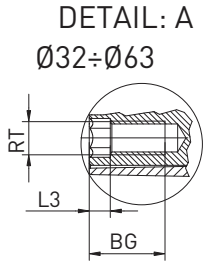

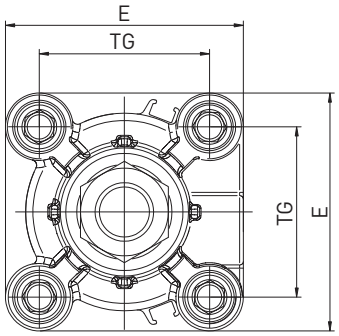

* DIMENSIONAL TOLERANCE
FOR DOWEL HOLES: ±0.02

DIMENSIONAL TOLERANCE
FOR THREADED HOLES: ±0.1

REV. 00 - 03/04/2015

COMPLEMENTARY PRODUCTS

6110-Series

Guided compact cylinder with additional metal rod scrapers

The rod guide is equipped with bearing bushings and guarantees **high precision and high loads**.

Technical characteristics

Function	double acting
Fluid	filtered air, if lubricated, the lubrication must be continuous
Working pressure	max. 10 bar
Working temperature	-5°C - +70°C
Cushioning	elastic bumper on both ends

Construction characteristics

Body	anodised aluminium
Guide rods	tempered and chromed steel
Piston	aluminium
Piston rod	C43 chromed steel
Rods bushing	bearing bushing
End plate	anodised aluminium
Piston seal	oil resistant NBR rubber
Piston rod seal	PUR
External rod scraper	brass
Internal rod scraper	NBR
Plate	nickel plated steel

The cylinders are equipped with 4 rod scrapers on the guide rods and 1 rod scraper on the central piston rod

Standard strokes

	Stroke								
Bore	**10**	**20**	**25**	**50**	**100**	**125**	**150**	**175**	**200**
Ø32			•	•	•	•	•	•	•
Ø40			•	•	•	•	•	•	•
Ø50			•	•	•	•	•	•	•
Ø63			•	•	•	•	•	•	•

Intermediate strokes can be obtained using spacers with defined length (5, 10, 15, 20 mm).
Example: It is possible to obtain a **6110.32.45.B** cylinder from a **6110.32.50.B** cylinder by inserting a spacer with length of 5 mm.
The intermediate strokes manufactured without the use of spacers are considered special executions.

Ordering string

6110-Series

6110 50 175 C

6110 — **VERSION**

50 — **SIZE**
- **32** = Ø 32 mm
- **40** = Ø 40 mm
- **50** = Ø 50 mm
- **63** = Ø 63 mm

175 — **STROKE**
- **25** = 25 mm
- **50** = 50 mm
- **100** = 100 mm
- **125** = 125 mm
- **150** = 150 mm
- **175** = 175 mm
- **200** = 200 mm

C — **SPECIFICATION**
- **C** = Side supply ports closed
- **CL** = Top supply ports closed

Technical information are provided for informative purpose only and can be subject to change without prior notice

6110 / Guided compact cylinder

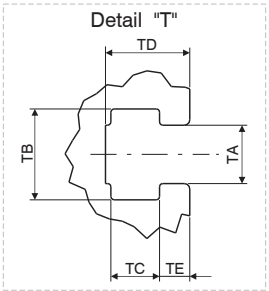

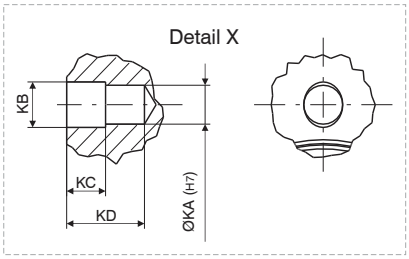

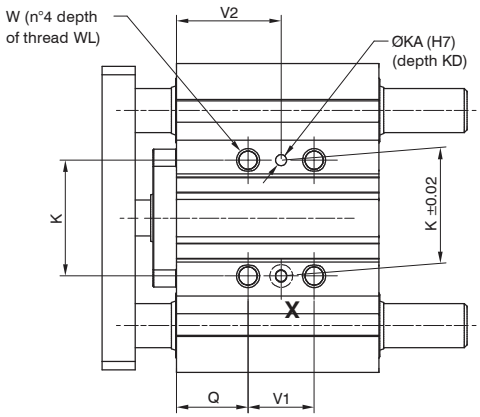

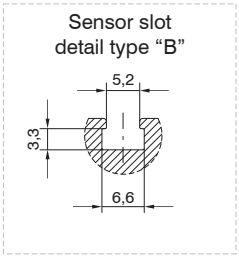

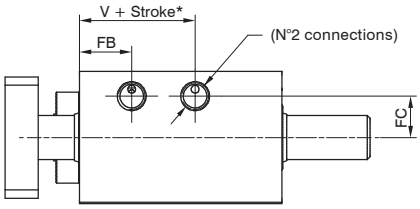

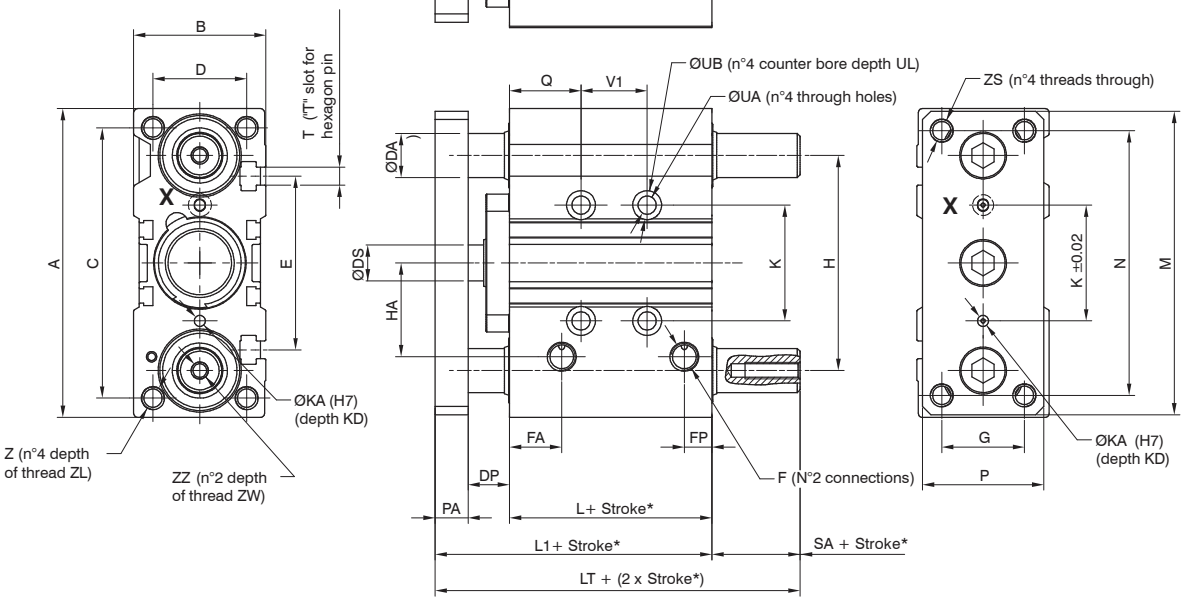

* DIMENSIONAL TOLERANCE
FOR DOWEL HOLES: ±0.02

DIMENSIONAL TOLERANCE
FOR THREADED HOLES: ±0.1

REV. 00 - 03/04/2015

Overall dimensions

Bore	Ø32	Ø40	Ø50	Ø63
Table of dimensions				
A	112	120	148	162
B	48	54	64	78
C	98	106	130	142
D	34	40	46	58
DA	16	16	20	20
DP	15	20	23	23
DS	16	16	20	20
E	63	72	92	110
F	G1/8"	G1/8"	G1/4"	G1/4"
FA	19	13	13	14
FB	19	13	13	14
FC	15	18	21,5	28
FP	10	11	11	12,5
G	30	30	40	50
H	78	86	110	124
HA	34	38	47	55
K	42	50	66	80
KA	4	4	5	5
KB	4,5	4,5	6	6
KC	3	3	4	4
KD	6	6	8	8
L	48,5	50	50	55
L1	75,5	82	88	93
LT	82,5	89	93	100
M	110	118	146	158

Bore	Ø32	Ø40	Ø50	Ø63
Table of dimensions				
N	96	104	130	130
PA	12	12	15	15
P	44	44	60	70
Q	26	22	24	24
SA	7	7	5	7
T	M6	M6	M8	M10
TA	6,5	6,5	8,5	11
TB	10,5	10,5	13,5	17,8
TC	5,5	5,5	7,5	10
TD	9,5	11	13,5	18,5
TE	3,5	4	4,5	7
UA	6,6	6,6	8,6	8,6
UB	11	11	14	14
UL	7,5	7,5	9	9
V	17	19	15	20
V1	See table 1			
V2				
W	M8x1,25	M8x1,25	M10x1,5	M10x1,5
WL	16	16	20	20
Z	M8x1,25	M8x1,25	M10x1,5	M10x1,5
ZL	20	20	22	22
ZS	M8x1,25	M8x1,25	M10x1,5	M10x1,5
ZZ	M6	M8	M10	M10
ZW	20	20	25	25

Table 1	V1			V2		
Bore	stroke≤25	25<stroke≤100	100<stroke≤200	stroke≤25	25<stroke≤100	100<stroke≤200
Ø32	24	48	124	38	50	88
Ø40				34	46	84
Ø50				36	48	86
Ø63	28	52	128	38	50	88

Technical information are provided for informative purpose only and can be subject to change without prior notice

Special design products

Cooling water intake cylinder for welding guns' electrodes replacement

Customized special design products:

PNEUMAX engineering department will analyse every request for any specific application and will adapt or develop new components to meet the customer's needs. **Get in touch with us!**

The capacity of the intake chamber is 0.1 l.
The cylinder can be mounted to the service panel (RIP) for automated welding.

Not suitable for manual welding operations

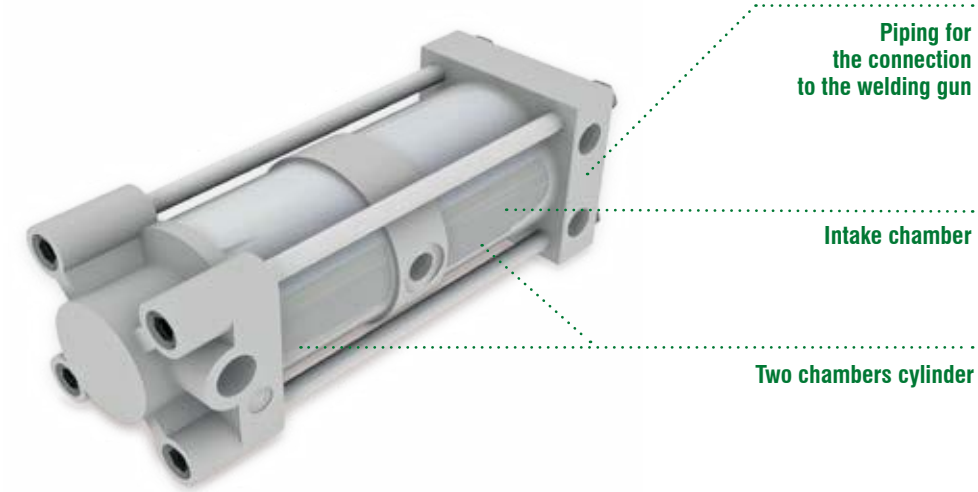

PCY0050 / Cooling water intake cylinder

REV. 00 - 18/02/2015

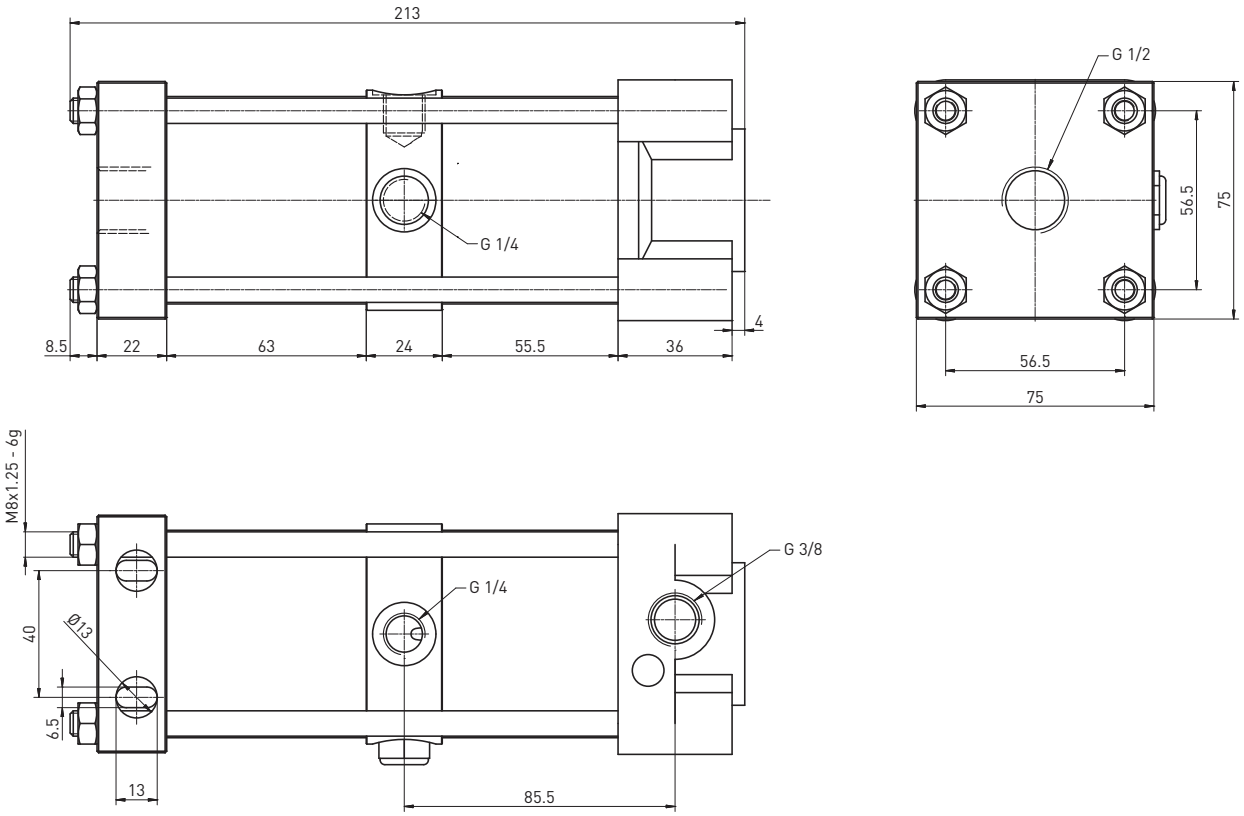

COMPLEMENTARY PRODUCTS

Accessories

Sensor

M12 or M8 connector;
PNP or NPN

Patented

EC001

Sensor cable

Auto-retaining device

for opening position An extremely light device which maintains the clamping arm in its defined opening position in case of air loss. The AR-series has been designed for **maximum load capacity** and due to its compact dimensions, it can be used on the same side of the manual operation handle.

Patented

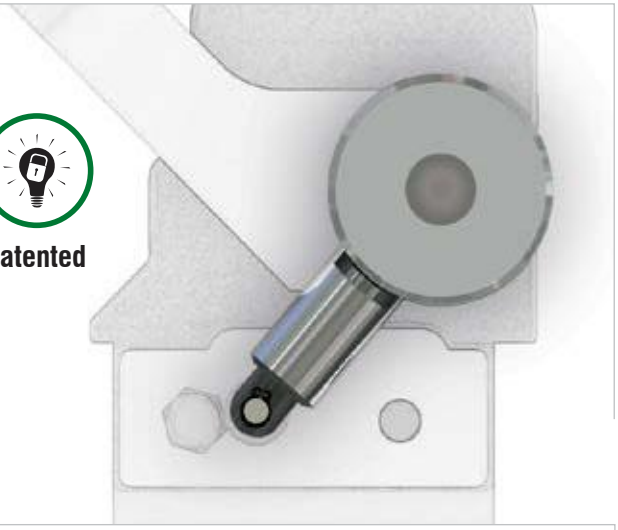

Shims and spacers

Technical information are provided for informative purpose only and can be subject to change without prior notice

Sensor

ES001. Electronic sensor used for all clamps, all sizes and series

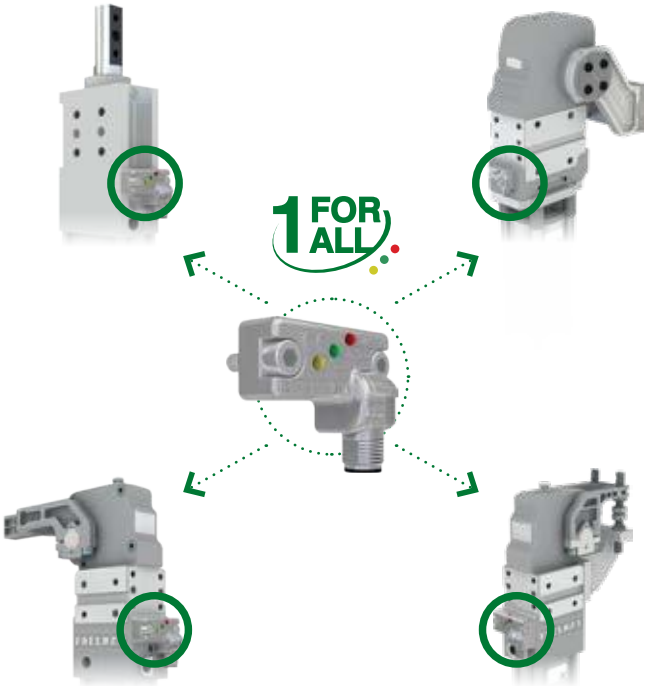

Technical features	
Operating voltage	10-30 VDC
Voltage drop	≤ 2 V
Load current	≤ 100 mA
Current consumption	≤ 30 mA
Short-circuit protection	protected
Protection rating	IP68
Operating temperature	–0 °C +50 °C
Storage temperature	–25 °C +60 °C
Electromagnetic compatibility	EN 60947-5-2:2007 + A1:2012
Power supply indication	green LED
Open position indication	yellow LED
Closed position indication	red LED
Digital output type	PNP

ES001 / Electronic sensor with M12 swivel connector - PNP

REV. 00 - 31/03/2015

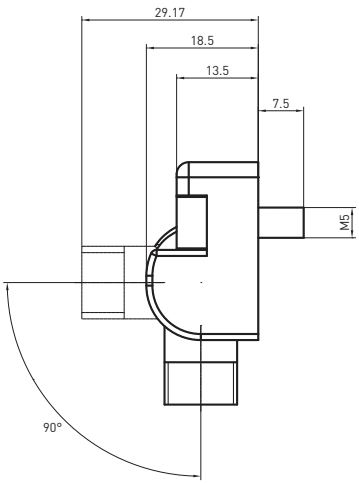

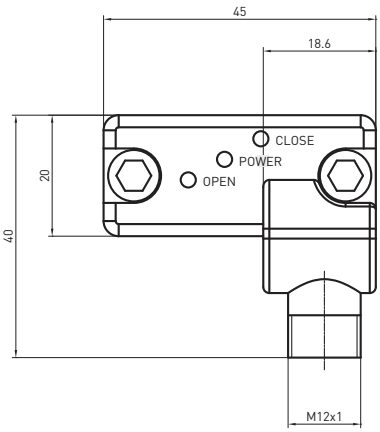

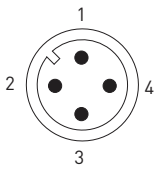

Semplified diagram (PNP)

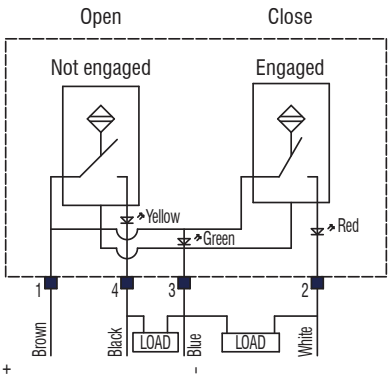

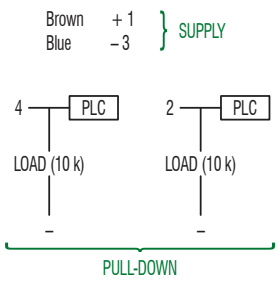

ACCESSORIES

ES002 / Electronic sensor with M12 swivel connector - NPN

REV. 00 - 31/03/2015

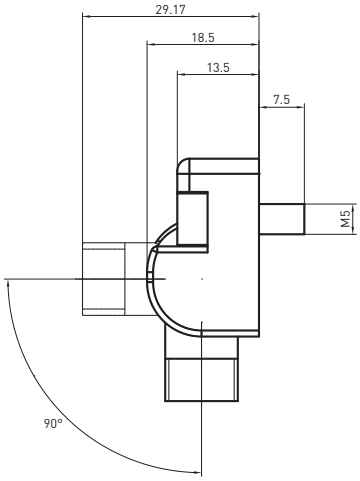

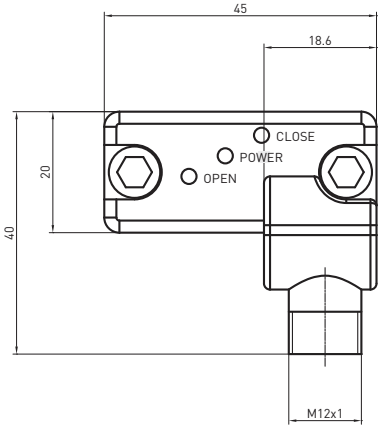

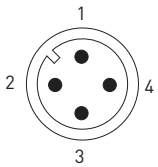

Semplified diagram (NPN)

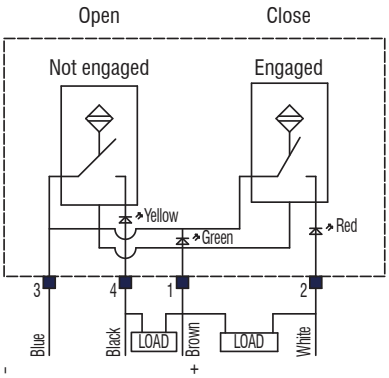

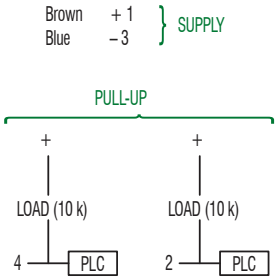

ES003 / Electronic sensor with M8 swivel connector - PNP

REV. 00 - 31/03/2015

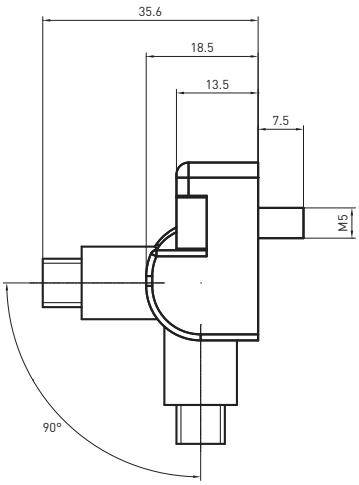

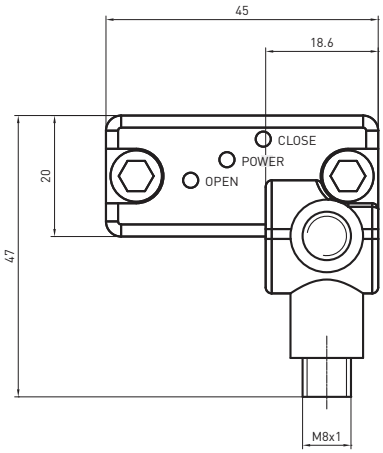

Semplified diagram (PNP)

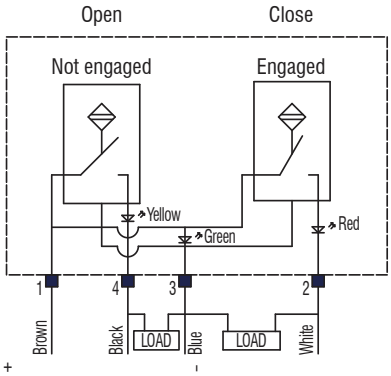

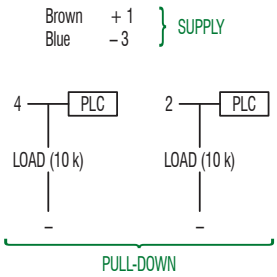

ACCESSORIES

Technical information are provided for informative purpose only and can be subject to change without prior notice

ES004 / Electronic sensor with M12 swivel connector - PNP

CNOMO

REV. 00 - 12/12/2016

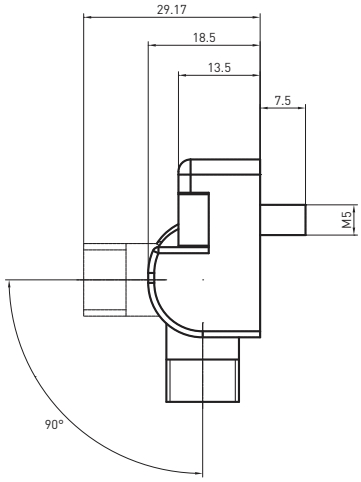

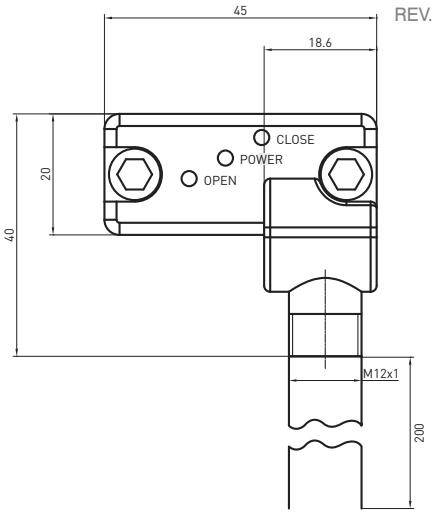

Semplified diagram (PNP)

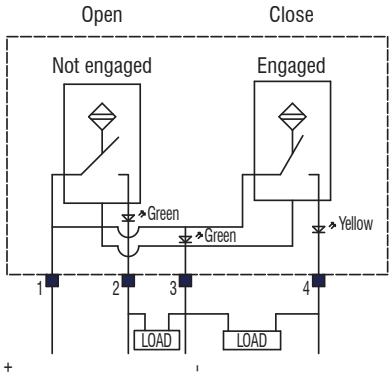

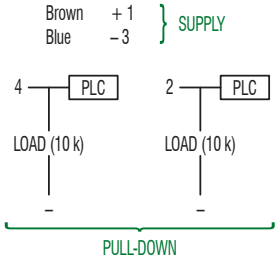

Technical features

Power supply indication	green LED
Open position indication	green LED
Closed position indication	yellow LED

Cable

EC001-05

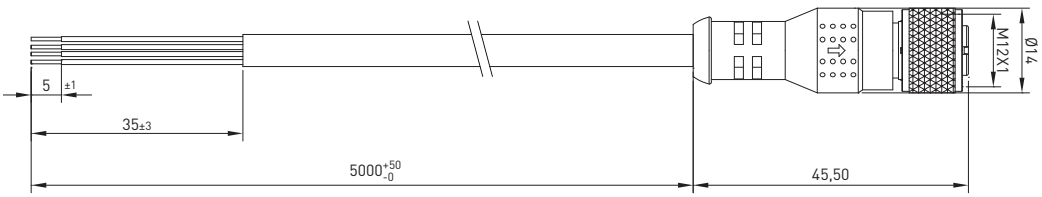

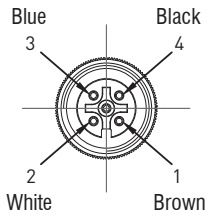

Technical features

Connector features	
Product type	M12 circular connector with moulded cable
Connector type	Straight 180°
Contacts type	Female 4 poles
Pin	4
Protection class	IP69K
Rated voltage	250V AC/DC
Rated current	4 A

Cable features	
Pneumax cable code	EC001-05
Numbers of conductors	4
Conductors section	0,34 mm2 (AWG22)
Cable material	PUR UL style 21576
Coating colour	Black
Conductors insulation material	TPO
Cable length	5000 mm
Stripping	35 mm Standard
Peeling and tinning	5 mm Standard

High flex (class 6)

* DIMENSIONAL TOLERANCE FOR DOWEL HOLES: ±0.02
DIMENSIONAL TOLERANCE FOR THREADED HOLES: ±0.1
REV. 00 - 03/04/2015

ACCESSORIES

AR-Series

Optional: auto-retaining device for opening position

An extremely light device which maintains the clamping arm in its defined opening position in case of air loss. The AR-series has been designed for **maximum load capacity** and due to its compact dimensions, it can be used on the same side of the manual operation handle.
It locks the manual lever and guarantees the working position of the pin package with no air. It can easily be assembled on the right, as well as on the left side of the unit.

Patented

INTERNATIONAL MOUNT

GLOBAL STANDARD COMPONENTS NAAMS

Ordering string

AR-Series

AR 12

AR	PRODUCT	**AR**	= Auto-retaining device
12	SIZE	**12**	= Clamp's shaft 12 mm
		16	= Clamp's shaft 16 mm
		19	= Clamp's shaft 19 mm
		22	= Clamp's shaft 22 mm
		30	= Clamp's shaft 30 mm
		19N	= Clamp's shaft 19 mm NAAMS
		22N	= Clamp's shaft 22 mm NAAMS
		30N	= Clamp's shaft 30 mm NAAMS
		09R	= for RD250 pin packages

AR12 / Clamp's shaft 12 mm

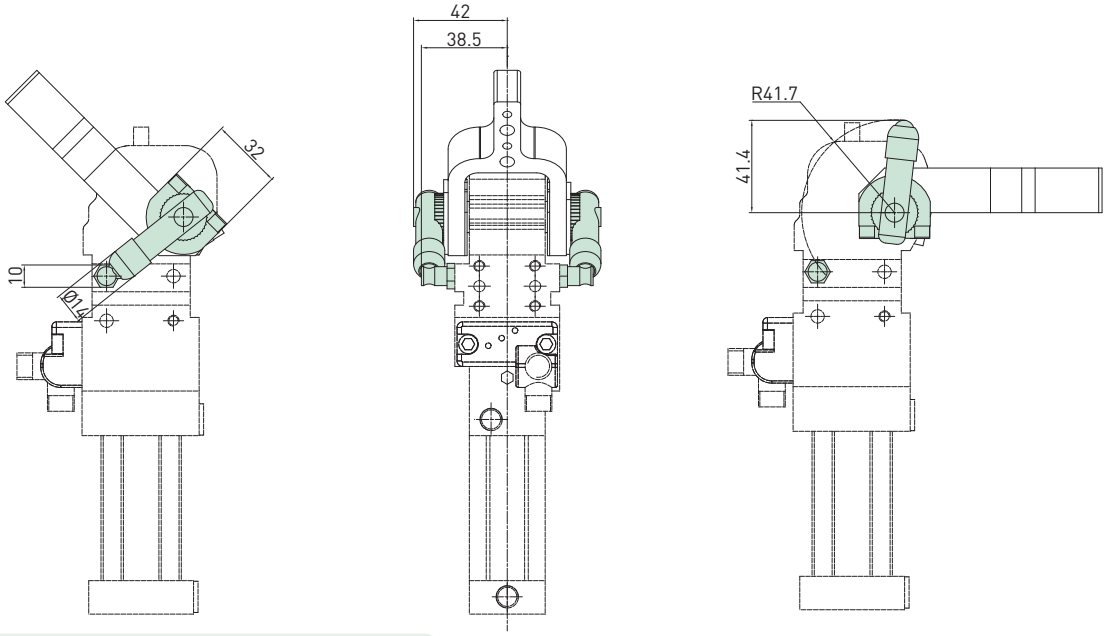

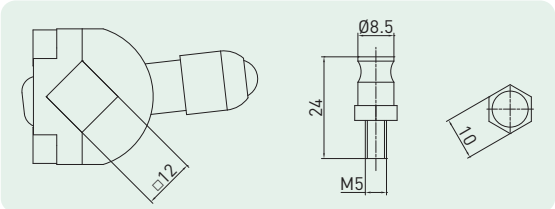

* DIMENSIONAL TOLERANCE FOR DOWEL HOLES: ±0.02

DIMENSIONAL TOLERANCE FOR THREADED HOLES: ±0.1

REV. 00 - 17/02/2016

ACCESSORIES

Technical information are provided for informative purpose only and can be subject to change without prior notice

AR16 / Clamp's shaft 16 mm

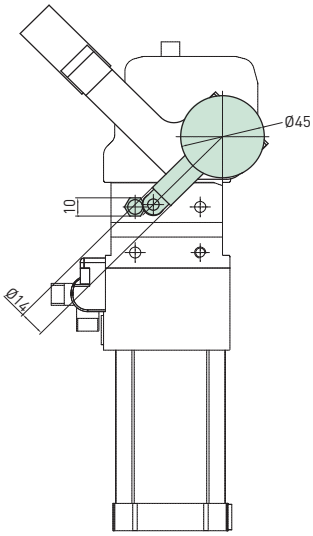

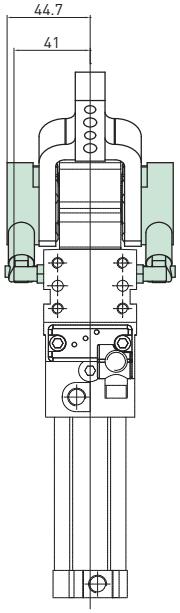

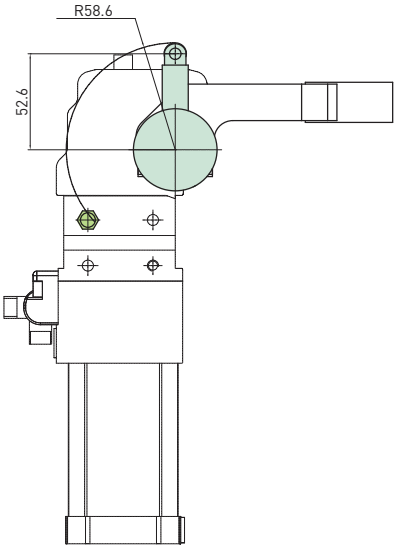

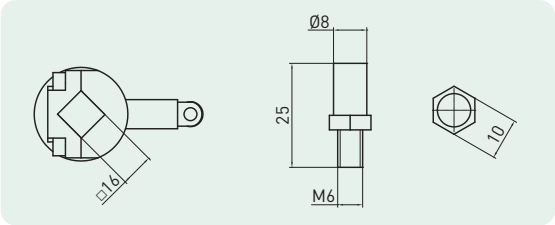

* DIMENSIONAL TOLERANCE
FOR DOWEL HOLES: ±0.02

DIMENSIONAL TOLERANCE
FOR THREADED HOLES: ±0.1

REV. 00 - 16/02/2016

AR19 / Clamp's shaft 19 mm

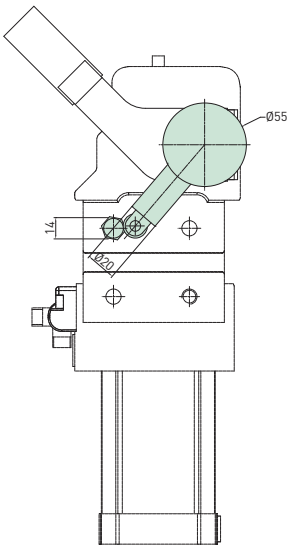

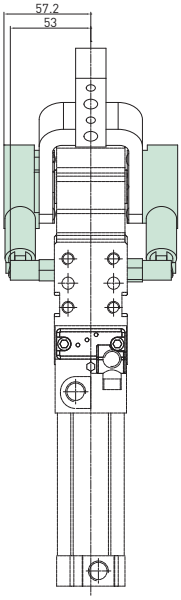

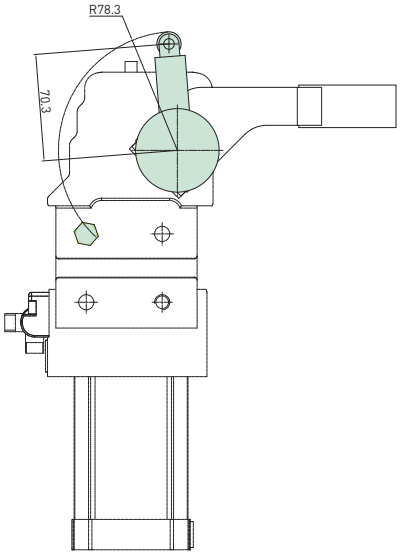

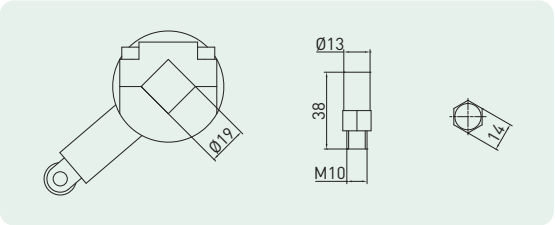

* DIMENSIONAL TOLERANCE
FOR DOWEL HOLES: ±0.02

DIMENSIONAL TOLERANCE
FOR THREADED HOLES: ±0.1

REV. 00 - 16/02/2016

AR22 / Clamp's shaft 22 mm

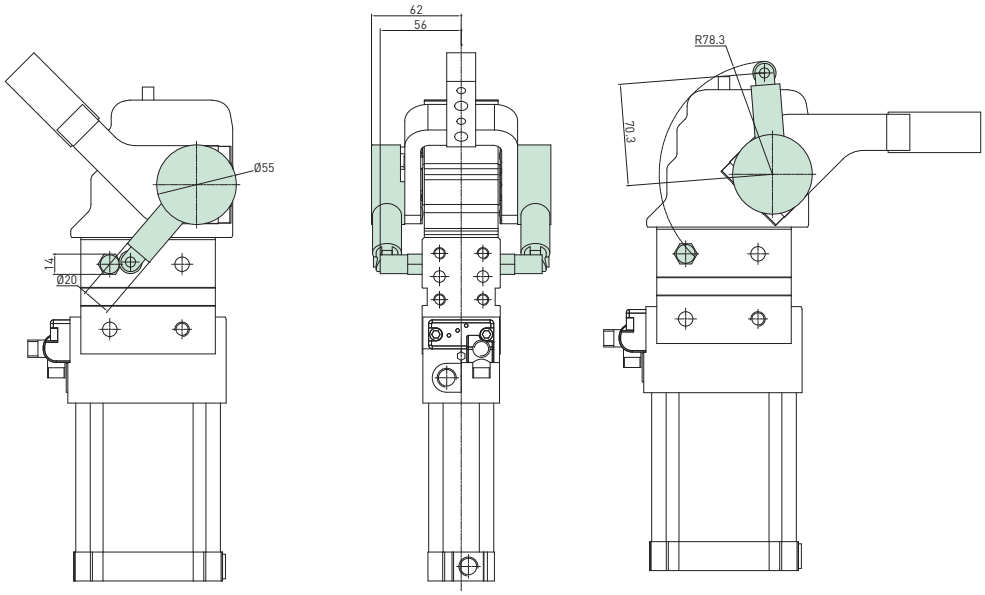

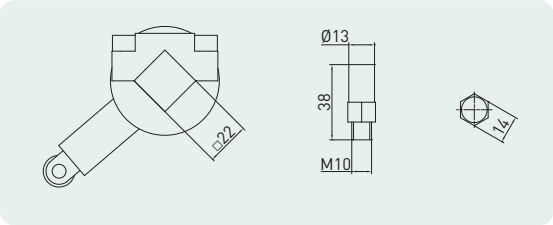

* DIMENSIONAL TOLERANCE FOR DOWEL HOLES: ±0.02

DIMENSIONAL TOLERANCE FOR THREADED HOLES: ±0.1

REV. 00 - 16/02/2016

AR30 / Clamp's shaft 30 mm

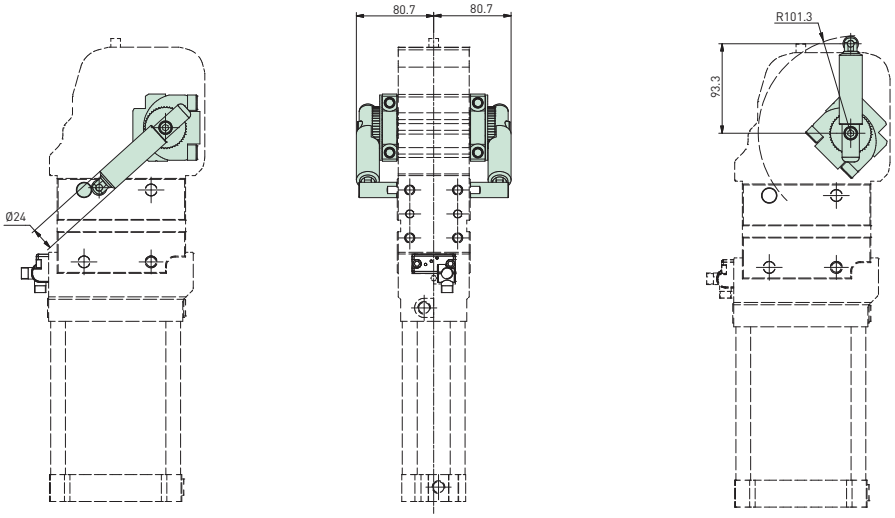

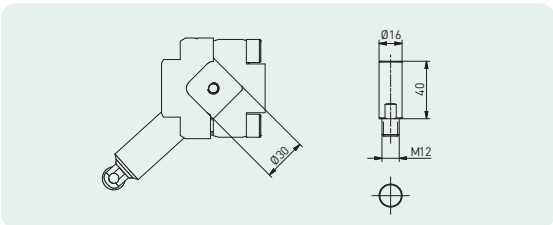

* DIMENSIONAL TOLERANCE FOR DOWEL HOLES: ±0.02

DIMENSIONAL TOLERANCE FOR THREADED HOLES: ±0.1

REV 00 - 29/03/2019

ACCESSORIES

Technical information are provided for informative purpose only and can be subject to change without prior notice

AR19N / Clamp's shaft 19 mm - NAAMS std

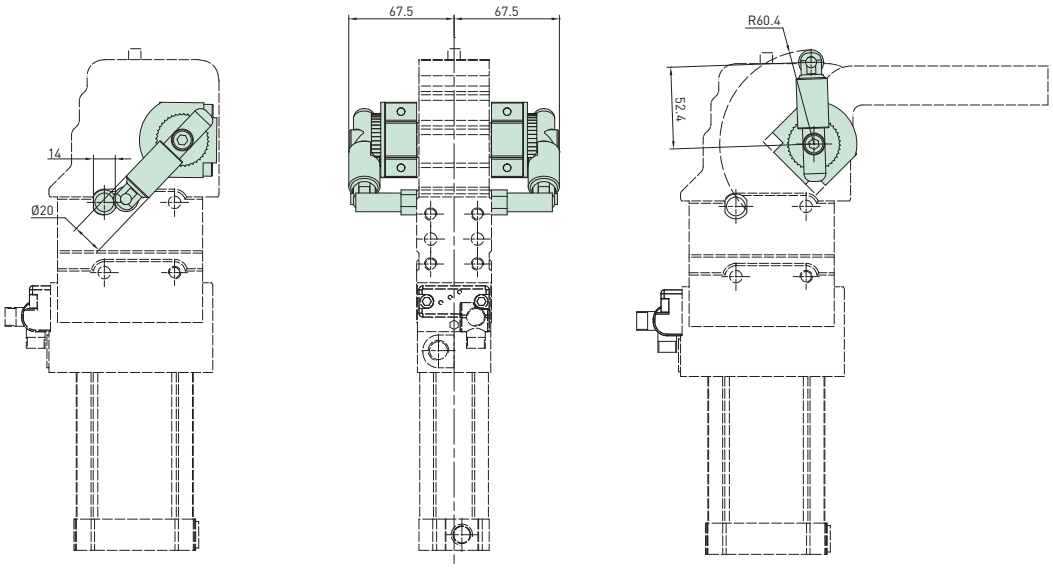

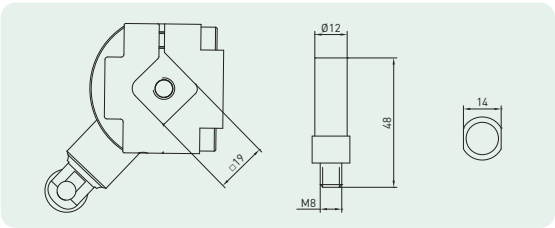

* DIMENSIONAL TOLERANCE FOR DOWEL HOLES: ±0.02

DIMENSIONAL TOLERANCE FOR THREADED HOLES: ±0.1

REV 00 - 29/03/2019

AR22N / Clamp's shaft 22 mm - NAAMS std

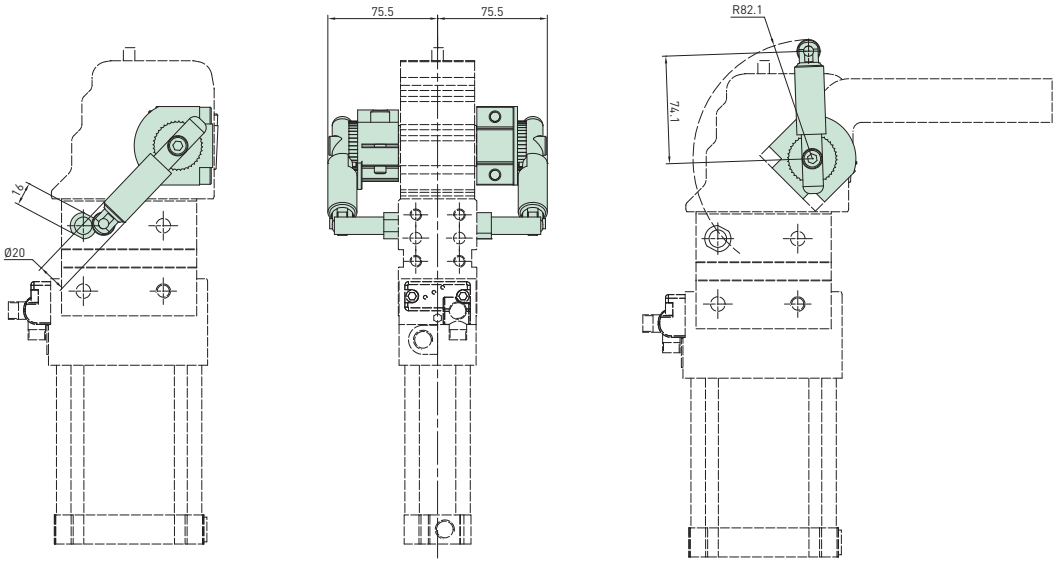

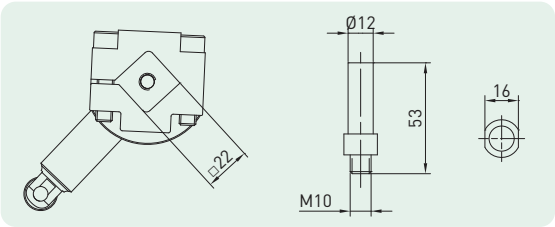

* DIMENSIONAL TOLERANCE FOR DOWEL HOLES: ±0.02

DIMENSIONAL TOLERANCE FOR THREADED HOLES: ±0.1

REV 00 - 29/03/2019

AR30N / Clamp's shaft 30 mm - NAAMS Std

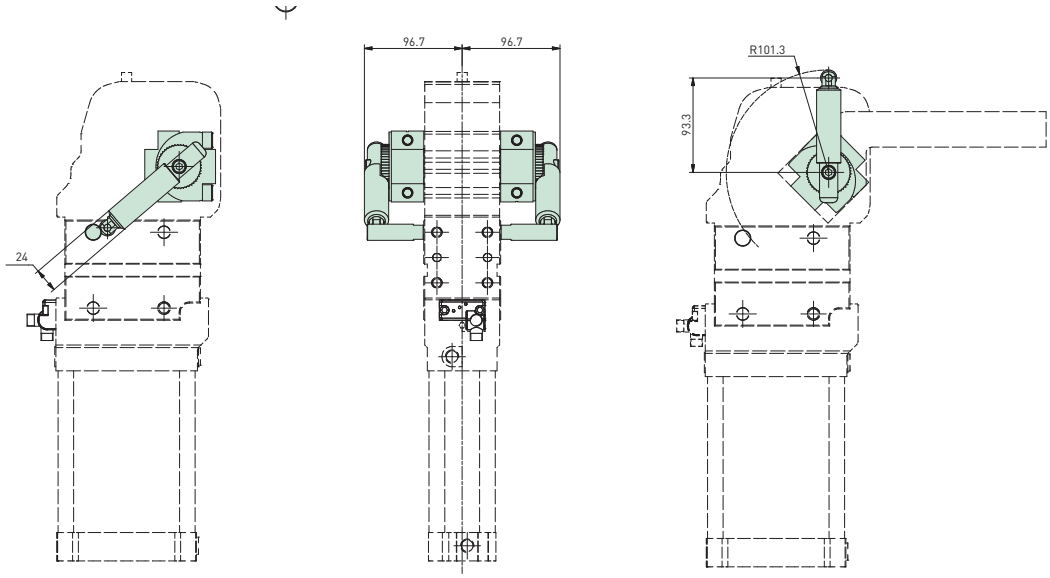

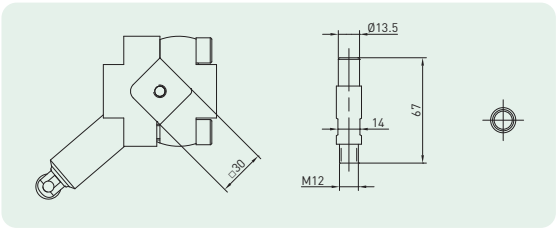

* DIMENSIONAL TOLERANCE FOR DOWEL HOLES: ±0.02

DIMENSIONAL TOLERANCE FOR THREADED HOLES: ±0.1

REV 00 - 29/03/2019

AR09RD / Auto-retaining system for pin packages with manual operation

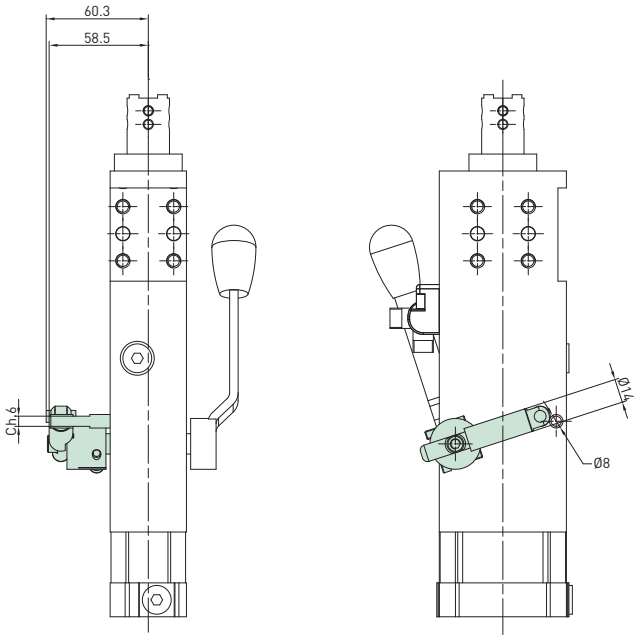

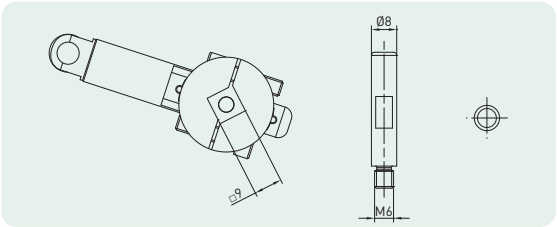

* DIMENSIONAL TOLERANCE FOR DOWEL HOLES: ±0.02

DIMENSIONAL TOLERANCE FOR THREADED HOLES: ±0.1

REV. 00 - 05/03/2018

Technical information are provided for informative purpose only and can be subject to change without prior notice

QIG_AR_EN Rev.00 04.2017

Auto-retaining device

Quick installation guide

Caution

Any maintenance operation may only be carried out by qualified and authorized personnel. For any reason, do not reach into the pivoting range of the clamping arms, when the clamps are in operation. Disconnect and lock out pneumatic and electric supply lines before operating on or around clamps.

A worksheet for the right sizing of the pin packages is available upon request. Visit our website for technical documents

http://automotive.pneumax.it/

Clamps in open position with auto-retain device

Clamp arm assembly

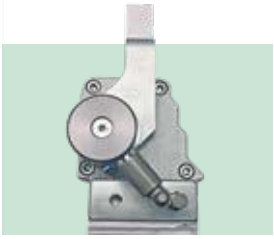

Position 1

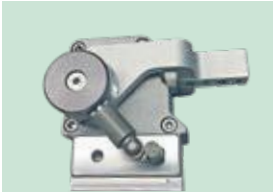

Position 2

Position 3

Position 4

Please check the max opening angle related to the different arm position in our catalogue.

Auto-retaining device for opening position

Patented

An extremely light device which maintains the clamping arm in its defined opening position in case of air loss. The AR-series has been designed for **maximum load capacity** and due to its compact dimensions, it can be used on the same side of the manual operation handle.

With the clamping arm in the opening position

Clamp arm installation

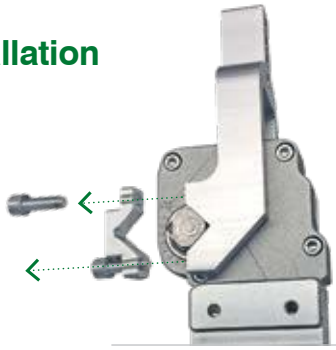

Step 1
Remove the standard bracket.

Step 2
Replace the standard bracket with the specific bracket included AR kit, and tighten it.

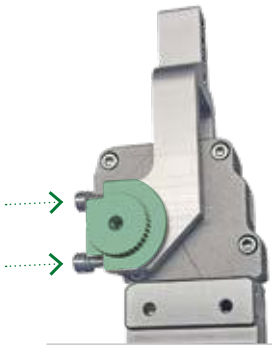

Step 3
Adjust the retaining device according to the opening angle, install the pin screw in the threaded hole of the side mount and tighten the retaining device with its screw.

Step 4
Set the interference between the holding device and the pin screw by slightly increasing or decreasing the opening angle adjustment, till the function is secured.

Shims and spacers

Ordering string

Shims

SH A 16 477 05

SH	PRODUCT	**SH**	= shims
A	MOUNTS	**A**	= for clamping arms
		M	= front, rear or side mounts of clamps or pin packages
16	SIZE	**16**	= for clamping arms with 16 mm shaft
		1922	= for clamping arms with 19 OR 22 mm shaft
		30	= for clamping arms with 30 mm shaft
		30x32	= mounting dimensions
477	HOLE PATTERN	**477**	= 4 holes, 2 Ø 7 screw holes and 2 Ø 7 dowel holes
		499	= 4 holes, 2 Ø 9 screw holes and 2 Ø 9 dowel holes
		399	= 3 holes, 2 Ø 9 screw holes and 1 Ø 9 dowel holes
05	THICKNESS	**01**	= 0.1 mm
		02	= 0.2 mm
		05	= 0.5 mm
		15	= 1.5 mm
		20	= 2 mm
		5	= 5 mm

Spacers

SP A 16 477 50

SP	PRODUCT	**SP**	= spacers
A	MOUNTS	**A**	= for clamping arms
		M	= front, rear or side mounts of clamps or pin packages
16	SIZE	**16**	= for clamping arms with 16 mm shaft
		1922	= for clamping arms with 19 OR 22 mm shaft
		30	= for clamping arms with 30 mm shaft
		30x32	= mounting dimensions
477	HOLE PATTERN	**477**	= 4 holes, 2 Ø 7 screw holes and 2 Ø 7 dowel holes
		499	= 4 holes, 2 Ø 9 screw holes and 2 Ø 9 dowel holes
		399	= 3 holes, 2 Ø 9 screw holes and 1 Ø 9 dowel holes
05	THICKNESS	**50**	= 5 mm

Technical information are provided for informative purpose only and can be subject to change without prior notice

Shims

* DIMENSIONAL TOLERANCE FOR DOWEL HOLES: ±0.02

DIMENSIONAL TOLERANCE FOR THREADED HOLES: ±0.1

REV. 00 - 01/10/2015

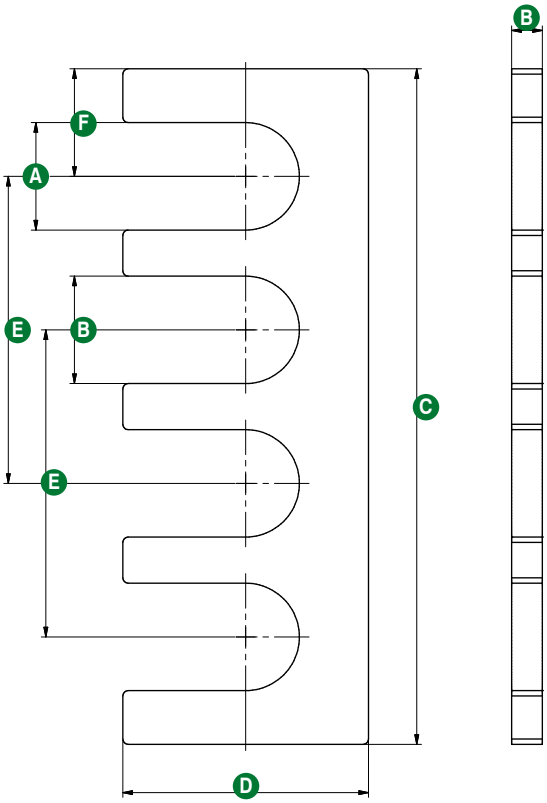

	A	B	C	D	E	F	G	TYPE
SHA1647701	7	7	44	16	20	7	0.1	4 SLOTS
SHA1647702	7	7	44	16	20	7	0.2	4 SLOTS
SHA1647705	7	7	44	16	20	7	0.5	4 SLOTS
SHA1647710	7	7	44	16	20	7	1	4 SLOTS
SHA1647720	7	7	44	16	20	7	2	4 SLOTS
SHA1647750	7	7	44	16	20	7	5	4 SLOTS
SHA192249901	9	9	60	20	30	7.5	0.1	4 SLOTS
SHA192249902	9	9	60	20	30	7.5	0.2	4 SLOTS
SHA192249905	9	9	60	20	30	7.5	0.5	4 SLOTS
SHA192249910	9	9	60	20	30	7.5	1	4 SLOTS
SHA192249920	9	9	60	20	30	7.5	2	4 SLOTS
SHA192249950	9	9	60	20	30	7.5	5	4 SLOTS
SHM30X3239901	9	9	50	50	32	9	5	3 SLOTS
SHM30X3239902	9	9	50	50	32	9	5	3 SLOTS
SHM30X3239905	9	9	50	50	32	9	5	3 SLOTS
SHM30X3239910	9	9	50	50	32	9	5	3 SLOTS
SHM30X3239920	9	9	50	50	32	9	5	3 SLOTS
SHM30X3239950	9	9	50	50	32	9	5	3 SLOTS
SPA1647750	7	7	44	16	20	7	5	4 HOLES
SPA192249950	9	9	60	20	30	7.5	5	4 HOLES
SPA3047750	9	9	60	25	30	7.5	5	4 HOLES
SPM192239950	9	9	50	50	32	9	5	6 HOLES

Spacers

* DIMENSIONAL TOLERANCE FOR DOWEL HOLES: ±0.02

DIMENSIONAL TOLERANCE FOR THREADED HOLES: ±0.1

REV. 00 - 01/10/2015

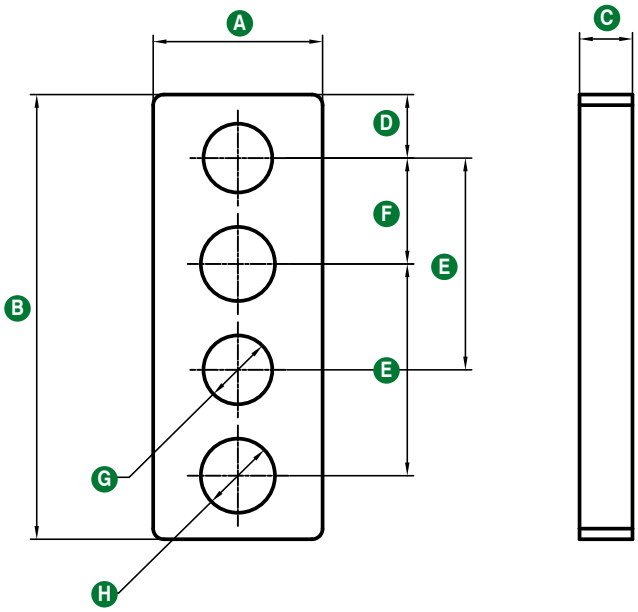

	A	B	C	D	E	F	G	H
SPA1647650	16	42	5	6	20	10	6.5	7
SPA192247650	20	60	5	7.5	30	15	9	9
SPA3047650	25	60	5	7.5	30	15	9	9

ATEX Directive

Clamping

ATEX READY

SERIES C1

part no. **XC1_25/80**

Marking	Temperature	Size	Mounting Pattern
II 2G Ex h IIC T6 Gb X II 2D Ex h IIIC T85°C Db X	0°C ≤ Ta ≤ +50°C (T6/T85°C)	Ø25 - Ø80mm	International mount

ATEX READY

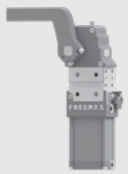

SERIES C2

part no. **XC2_50/80**

Marking	Temperature	Size	Mounting Pattern
II 2G Ex h IIC T6 Gb X II 2D Ex h IIIC T85°C Db X	0°C ≤ Ta ≤ +50°C (T6/T85°C)	Ø50 - Ø80mm	NAAMS Standard

ATEX READY

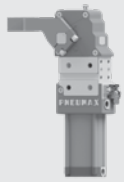

SERIES HE1

part no. **XHE1P0/1/2/3/4**

Marking	Temperature	Size	Mounting Pattern
II 2G Ex h IIC T6 Gb X II 2D Ex h IIIC T85°C Db X	0°C ≤ Ta ≤ +50°C (T6/T85°C)	Ø40 - Ø80mm	International mount

ATEX READY

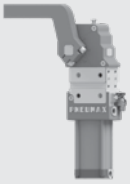

SERIES HE2

part no. **XHE2P1/2/3**

Marking	Temperature	Size	Mounting Pattern
II 2G Ex h IIC T6 Gb X II 2D Ex h IIIC T85°C Db X	0°C ≤ Ta ≤ +50°C (T6/T85°C)	Ø50 - Ø80mm	NAAMS Standard

Technical information are provided for informative purpose only and can be subject to change without prior notice

ATEX READY

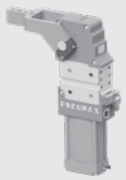

SERIES CX

part no. **XC_X40/50/63**

Marking	Temperature	Size	Mounting Pattern
II 2G Ex h IIC T6 Gb X II 2D Ex h IIIC T85°C Db X	**0°C ≤ Ta ≤ +50°C (T6/T85°C)**	**Ø40 - Ø63mm**	**International mount / NAAMS Standard**

ATEX READY

SERIES CS/HES

part no. **XCS/HES**

Marking	Temperature	Size	Mounting Pattern
II 2G Ex h IIC T6 Gb X II 2D Ex h IIIC T85°C Db X	**0°C ≤ Ta ≤ +50°C (T6/T85°C)**	**Ø40 - Ø80mm**	**International mount / NAAMS Standard**

ATEX READY

SERIES CB

part no. **XCB40/63**

Marking	Temperature	Size	Mounting Pattern
II 2G Ex h IIC T6 Gb X II 2D Ex h IIIC T85°C Db X	**0°C ≤ Ta ≤ +50°C (T6/T85°C)**	**Ø40; Ø63mm**	**International mount**

ATEX READY

SERIES AR

part no. **XAR_/AR_N/AR09R**

Marking	Temperature	Size	Mounting Pattern
II 2G Ex h IIC T6 Gb X II 2D Ex h IIIC T85°C Db X	**0°C ≤ Ta ≤ +50°C (T6/T85°C)**	**12mm; 16mm; 19mm; 22mm; 30mm**	**International mount / NAAMS Standard**

Locating

ATEX READY

SERIES R

part no. **XR_32**

Marking	Temperature	Size	Stroke
II 2G Ex h IIC T6 Gb X II 2D Ex h IIIC T85°C Db X	0°C ≤ Ta ≤ +50°C (T6/T85°C)	Ø32mm	20mm; 40mm

part no. **XR_50/63**

Marking	Temperature	Size	Stroke
II 2G Ex h IIC T6 Gb X II 2D Ex h IIIC T85°C Db X	0°C ≤ Ta ≤ +50°C (T6/T85°C)	Ø50; Ø63mm	15mm; 25mm; 40mm; 50mm; 60mm

ATEX READY

SERIES RT

part no. **XRT_40**

Marking	Temperature	Size	Stroke
II 2G Ex h IIC T6 Gb X II 2D Ex h IIIC T85°C Db X	0°C ≤ Ta ≤ +50°C (T6/T85°C)	Ø40 mm	40 mm

ATEX READY

SERIES RC

part no. **XRC_D50/63**

Marking	Temperature	Size	Stroke
II 2G Ex h IIC T6 Gb X II 2D Ex h IIIC T85°C Db X	0°C ≤ Ta ≤ +50°C (T6/T85°C)	Ø50; Ø63mm	25mm; 50mm

ATEX READY

SERIES HP

part no. **XHP50**

Marking	Temperature	Size	Stroke
II 2G Ex h IIC T6 Gb X II 2D Ex h IIIC T85°C Db X	0°C ≤ Ta ≤ +50°C (T6/T85°C)	Ø50mm	15mm; 25mm; 40mm; 50mm; 60mm

ATEX READY

SERIES F

part no. **XF_40/41/63**

Marking	Temperature	Size	Stroke
II 2G Ex h IIC T6 Gb X II 2D Ex h IIIC T85°C Db X	0°C ≤ Ta ≤ +50°C (T6/T85°C)	Ø40 mm, Ø41 mm, Ø63mm	15mm; 25mm; 40mm; 50mm; 60mm

ATEX READY

SERIES FT

part no. **XFT_50**

Marking	Temperature	Size	Stroke
II 2G Ex h IIC T6 Gb X II 2D Ex h IIIC T85°C Db X	0°C ≤ Ta ≤ +50°C (T6/T85°C)	Ø50 mm	40mm

Technical information are provided for informative purpose only and can be subject to change without prior notice

Handling

ATEX READY

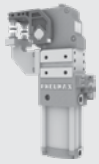

SERIES J

part no. **XJ_40**

Marking	Temperature	Size	Arm
II 2G Ex h IIC T6 Gb X II 2D Ex h IIIC T85°C Db X	**0°C ≤ Ta ≤ +50°C (T6/T85°C)**	**Ø40 mm**	**Aluminum / Steel**

Pivoting

ATEX READY

SERIES P

part no. **XP63**

Marking	Temperature	Size	Opening Angle
II 2G Ex h IIC T6 Gb X II 2D Ex h IIIC T85°C Db X	**0°C ≤ Ta ≤ +50°C (T6/T85°C)**	**Ø63 mm**	**0°-135°**

cod. **XP80/100/125**

Marking	Temperature	Size	Opening Angle
II 2G Ex h IIC T6 Gb X II 2D Ex h IIIC T85°C Db X	**0°C ≤ Ta ≤ +50°C (T6/T85°C)**	**Ø80, Ø100 mm, Ø125 mm**	**45°; 60°; 90°; 120°; 135°**

Components for the automotive industry

Pneumax is a **one-source supplier** for the Automotive Industry with a comprehensive line of:

- **Pneumatic drives**
- **Valves**
- **Valve terminals**
- **Communication control blocks**
- **Compressed air preparation**
- **Grippers**
- **Exhaustive range of clamping, locating, handling and pivoting devices for BIW.**

ECOMPACT
Compact cylinders

SHORT STROKE
Compact cylinders

ECOLIGHT ISO 15552
Standard-based light cylinders

ISO 6432
Standard-Based microcylinders

ECOFLAT
Flat cylinders

RODLESS
Cylinders

GUIDED
Compact cylinders

GUIDED COMPACT CYLINDERS
Metal Rod Scrapers

Technical information are provided for informative purpose only and can be subject to change without prior notice

Serial connections with:

- CANopen
- EtherCAT
- DeviceNet
- IO-Link
- PROFIBUS
- PROFINET
- EtherNet/IP

ROTARY ACTUATORS
Cylinders

AIRPLUS
Modular Air Service Units

OPTYMA
Valve Manifold series

PARALLEL GRIPPERS
Compact cylinders

Radial grippers (180°)

Three-points grippers

Angle grippers

Mini slides

CABINETS AND SYSTEMS

ISO 15407
Valve Manifold series

SERIE 1700
Proportional regulators

SPECIAL SOLUTION
Cooling water intake cylinder

HEADQUARTERS

PNEUMAX

PNEUMAX S.P.A.

Via Cascina Barbellina, 10
24050 Lurano (BG) - Italia
Tel. 035/4192777
Fax 035/4192740 - 035/4192741
info@pneumaxspa.com
www.pneumaxspa.com

TITAN ENGINEERING S.P.A.

Via dei Cerri, 16
47899 Serravalle - RSM
Tel. +378 0549/960419
Fax +378 0549/960421
info@titanengineering.sm
www.titanengineering.sm

NATIONAL SALES NETWORK

LIGURIA - PIEMONTE - VALLE D'AOSTA

Pneumax Torino S.r.l.
Corso Allamano, 34
10095, Grugliasco (TO)
Tel. 011 4143656
info@pneumaxtorino.com
www.pneumaxtorino.com

LOMBARDIA

Pneumax Milano Brianza S.r.l.
Via Alberto I° re dei Belgi, 13
20900, Monza (MB)
Tel. 039 736176
info@pneumaxmb.it
www.pneumaxmilanobrianza.it

Pneumax Service S.r.l.
Via Mons. Portaluppi, 13
24049, Verdello (BG)
Tel. 035 4820540
info@pneumax-service.it
www.pneumax-service.it

Fluidmec S.p.A.
Via Gussalli, 4
25131, Brescia (BS)
Tel. 030 2686511
fluidmec@fluidmec.it
www.fluidmec.it

Interfluid S.r.l.
Via Lazzaretto, 10 F
21013, Gallarate (VA)
Tel. 0331 772410
info@interfluid.it
www.interfluid.it

FRIULI VENEZIA GIULIA - VENETO TRENTINO ALTO ADIGE

Pneumax Veneto S.r.l.
V.le della Tecnica, 15
36100, Vicenza (VI)
Tel. 0444 289011
info@pneumaxveneto.it
www.pneumaxveneto.it

MARCHE

Pneumatec S.r.l.
Via Ancona, 42
61010, Tavullia (PU)
Tel. 0721 202762
info@pneumatec.it
www.pneumatec.it

EMILIA-ROMAGNA

Air Fluid Center S.r.l.
Via Machiavell, 38B
29121, Piacenza (PI)
Tel. 0523 490800
vendite@airfluidcenter.it
www.airfluidcenter.it

A.I.R. Pneumatic Center S.r.l.
Via J. Gutenberg, 6
47822, Santarcangelo di Romagna (RN)
Tel. 0541 624314
info@airpneumatic.it
www.airpneumatic.it

F.I.A.P. S.p.A.
Via Palach, 75
41122, Modena (MO)
Tel. 059 311084
info@fiapspa.it
www.fiapspa.it

F.I.P. S.p.A.
Via B.Franklin, 31
43122, Parma (PR)
Tel. 0521 606132
info@fipsrl.it
www.fipspa.eu

TOSCANA

Pneumax Toscana S.r.l.
Via Bruno Sarri, 20/A
50019, Sesto Fiorentino (FI)
Tel. 055 8071307
info@pneumaxtoscana.it
www.pneumaxtoscana.it

UMBRIA

Oleodinamica Palmerini S.r.l.
Via dell'industria, 6
06135, Perugia (PG)
Tel. 075 398541
oleodinamica@palmerini.com
www.palmerini.com

ABRUZZO - BASILICATA - CAMPANIA CALABRIA - LAZIO - MOLISE - PUGLIA SARDEGNA - SICILIA

Pneumax Sud S.r.l.
Via dei Bucaneve, SNC
70026, Modugno (BA)
Tel. 080 9645904
info@pneumaxsud.it
www.pneumaxsud.it

Technical information are provided for informative purpose only and can be subject to change without prior notice

WORLDWIDE NETWORK

EUROPE

ALBANIA
Industrial Air Solution shpk
Rruga industriale Tirane Vore, km 11,
1032 Vore Tirane
Tel. +355 69 40 80 349
info@iasolution.al
www.iasolution.al

AUSTRIA AND SWITZERLAND
Managed by Pneumax GmbH (Germany)

BELGIUM
Pneuvano BV
Koralenhoeve 4
2160, Wommelgem
Tel. +32 3 355 32 20
info@pneuvano.com
www.pneuvano.com

BULGARIA
Ulmer DM OOD
Adam Mizkevich Str. 4a, 1360, Sofia
Tel. +359 (2) 9259951
office@ulmer.bg
www.ulmer.bg

CYPRUS
G C V Spare Parts & Services Ltd
Industrial Area, Anatoniko 8086
P.O. Box 62731, Paphos
Tel. +357 26812444
gcv.cy@cytanet.com.cy
www.gcv-parts.com

CROATIA
ProElektronika d.o.o. - Zagabria
Stefanovecka 10, 10040, Zagabria
Tel. +385 (0)1 5588 988
info@proelektronika.hr
www.proelektronika.hr

ESTONIA
Alas-Kuul AS
Loomäe tee 1, Lehmja küla
75306, Rae vald Harjumaa
Tel. +372 6593 218
info@alas-kuul.ee
www.alas-kuul.ee

FRANCE
Pneumax France SAS
Z.I. NORD PARADIES 7
Rue de Waldkirch - BP 42
67601, Selestat CEDEX
Tel. +33 (3) 88580450
commercial@pneumax-france.fr
www.pneumax-france.fr

GERMANY
Pneumax GmbH
Tantalstraße 4
63571, Gelnhausen
Tel. +49 (0) 6051 9777 0
info@pneumax-gmbh.de
www.pneumax.de

GREECE
Hydropneumatic Hellas S.A.
69, Spirou Patsi Str. T.K., 118 55, Atene
Tel. +30 (210) 3474181-2-3
info@mitsis.com.gr
www.mitsis.com.gr

UNITED KINGDOM
Pneumax UK Ltd.
110 Vista Park,
Mauretania Road
SO16 0YS, Nursling
Tel. +44 2380 740412
sales@pneumax.co.uk
www.pneumax.co.uk

ICELAND
Barki E.H.F. Ltd
Nybylavegi 22, 200, Kópavogur
Tel. +354 554 6499
barkiea@islandia.is

LITHUANIA
UAB "Domingos prekyba"
Savanoriu PR 187-4 Korp, 2053, Vilnius
Tel. +370 5 2322231
info@dominga.lt
www.dominga.lt

NORTHERN MACEDONIA
DIL KOM DOOEL
St. Joska Jordanoski No 657500, Prilep
Tel. +389 78244177
export.dilkom@gmail.com
www.dilkom.mk

MALTA
iAutomate Limited
San Bernard, Marsa MRS 1332, Malta
Tel. +356 2786 3996
matthew@iautomate.mt
www.iautomate.mt

NETHERLANDS
Pneu/Tec B.V.
Dirk Storklaan 75, 2132 PX, Hoofddorp
Tel. +31 (0) 235699090
sales@pneutec.nl
www.pneutec.nl

POLAND
Rectus Polska SP. Z.O.O.
Gumna 96, 43-426, Debowiec
Tel. +48 (33) 857 98 00
pneumax@pneumax.pl
www.pneumax.pl

PORTUGAL
Portugal Pneumax Lda
Complexo Industrial da
Granja Fracção H-Casarias
2625-607, Vialonga
Tel. +351 (219) 737390
geral@pneumax.pt
www.pneumax.pt

CZECH REPUBLIC
Pneumax Automation s.r.o.
U Panského mlýna 240/9,
747 06, Opava
Tel. +420 553 760 953
pneumax@pneumaxsro.cz
www.pneumaxsro.cz

ROMANIA
Gica Import Export
Zona Industriala de Vest str. II nr. 5,
310491, Arad
Tel. +40 257 259816
comercial@gica.ro
www.gica.ro

RUSSIA / CIS
Pneumax Ltd. Moscow
Kommunalniy proezd, 30
141400, Khimki
Tel. +7 495 7393999
mail@pneumax.ru
www.pneumax.ru

DENMARK - FINLAND NORWAY - SWEDEN (SCANDINAVIA)
Pneumax Scandinavia AB
Strandvägen 101, SE-234 31, Lomma
Tel. +46 (40) 617 40 40
info@pneumax.se
www.pneumax.se

SERBIA
Hidraulika DOO
Cirila i Metodija 15, 15000, Šabac
Tel. +381 15 360 090
info@hidraulika.rs
www.hidraulika.rs

SLOVENIA
Hidravlika d.o.o.
Medlog, 16, 3000, Celje
Tel. +386 (3) 5453610
info@hidravlika.si
www.hidravlika.si

TRG d.o.o.
Celovška cesta 150, 1000, Ljubljana
+386 1 500 14 51
info@podjetje-trg.si
www.podjetje-trg.si

SPAIN
Pneumax S.A.
Olaso Kalea, 54, 20870, Elgoibar
Tel. +34 943 744144
pneumax@pneumax.es
www.pneumax.es

Pneumax Catalunya S.A.
C/Riera de Vallvidrera,
Parc. 2N. 1 P.I. Riera del Molì
8750, Molins de Rei
Tel. +34 (93) 680 25 30
pneumax@pneumaxcat.com
www.pneumax.es

TURKEY
Eteknik Otomasyon Tic. Ltd. Sti
Perpa Ticaret Merkezi B Blok Kat:11 No:1636 Ok-meydanı Sisli (Istanbul)
Tel. +90 212 320 81 10
recepcakar@eteknik.com
www.eteknik.com

UKRAINE
UKRTECHTRONIC LLC.
st. Nyzhnoyurkivska, 9, 04080, Kiev
Tel. +38 044 500 98 48
sales@techtronic.com.ua
www.techtronic.com.ua

HUNGARY
Szele-Tech Bt.
Gvadányi u. 33-39. I. em. 108., 1141, Budapest
Tel. +36 1 401 0023
info@szele-tech.hu
www.szele-tech.hu

WORLDWIDE NETWORK

NORTH AMERICA

CANADA
Manufacture Scorpion Inc.
561, rue Edouard, J2G 3Z5, Granby
Tel. +1 (450) 378-3595
contact@mscorpion.com
www.manufacturescorpion.com

USA
Pneumax Automation LLC
128 Durkee Lane, Dallas
NC 28034 - USA
Tel.: +1 704 215 6991
Fax: +1 888 613 6529
info@pneumax.us
www.pneumax.us

MEXICO
Pneumatecnia S.A. DE C.V. - Zapopan
Calle Volcán Popocatépetl 1844, Colli Urbano
45070, Zapopan, Jalisco
Tel. +52 33 31255978
pneumatecnia@yahoo.com.mx
www.pneumatecnia.com.mx

CENTRAL AMERICA

COSTA RICA
PYASA Proyectos y Automatizacion S.A.
Oficentro Santa María Oficina 1A,
50 metros Norte
Del Hampton Inn & Suites, Alajuela
Tel. +506 2441-5129 / 2441-5130
info@pyasa.net
https://pyasa.net

EL SALVADOR
Tecni Equipos S.A. de C.V.
Av. Sierra Nevada, 704 Edificio CC, 2
Colonia Miramonte, San Salvador
Tel. +503 2260 8293
Tel. +503 2261 1497
tecniequipos.com.sv

GUATEMALA
PYASA Proyectos y Automatización S.A.
Avenida 3era 13-30 El Rosario Ofibodegas
San Javier zona 3 de Mixco bodega 7
Città del Guatemala
Tel. +502 24911414
info@pyasa.net
https://pyasa.net

NICARAGUA
PYASA Proyectos y Automatización S.A.
Plaza Maranhao, local 7, Reparto Los Robles, o
bien, del Hotel Seminole 100 m sur,
1/2 m al oeste
Managua
Tel. +505-2255-6840
info@pyasa.net
https://pyasa.net

SOUTH AMERICA

ARGENTINA
Figli Daniele S.r.l.
PTE PERON 3234
San Justo - Pcia De Bs As.
Tel. +54 11 4484-2074
Fax +54 11 4651-6721
bruno@dinautomacion.com.ar
www.dinautomacion.com.ar

BRAZIL
Pneumax Brasil
Rua Apucarana 211
8301050, São José dos Pinhais
Tel. +55 41 33987262
diretoria@pneumaxbr.com.br
www.pneumaxbr.com.br

CHILE
Schultz Automatizacion e Ingenieria Ltda
El Retiro 1247 - Enea - Pudahuel, Santiago
Tel. +56 (2) 4951400
jschultz@schultzautomatizacion.cl
www.schultzsa.cl

COLOMBIA
Soluciones Neumaticas S.A.S.
Calle. 21 #1-21, Barrio San Nicolas, Cali
Tel. +57 (2) 4897647
ingenieria@solucionesneumaticas.com
www.solucionesneumaticas.com

ECUADOR
Equipos para automatización
Industrial Equipautind S.A.
Km 12,5 de la vía a Daule s/n entre
La Ciudadela el caracol y el motel las Palmas
090706, Guayaquil
Tel. +593-42017785 / 2017914
info@equipautind.com.ec
www.equipautind.com.ec

AINSA S.A.
Av. Juan Tanca Marengo
Km 2,5 y Agustín Freire
EC090509, Guayaquil
Tel. +593-4 3712670
info@ainsa.com.ec
www.ainsa.com.ec

PERU
Neumatec Perù S.A.C.
Calle General Suárez 1023,
Miraflores, Lima 18
Tel. +51 (1) 4442499
ventas@neumatecperu.com
www.neumatecperu.com

WEF Perù S.A.C.
Jr. Dinamarca 1427,
LIMA 01, Cercado de Lima
Tel. +511 4255740
oficinacentral@wefperu.com
www.wefperu.com

URUGUAY
Secoin S.A
General Aguilar 1270 bis,
Gral. Fausto Aguilar 1270,
11800 Departamento de Montevideo
Tel. +598 2209 3815
ventas@secoin.com.uy
www.secoin.com.uy

VENEZUELA
Sinteco Barquisimento
AV.Las Industrias Km2,
Edif. Centro de servicios
mercantiles local 2, Barquisimeto
Tel. +58 414 3500587
sintecobarqto@gmail.com

AFRICA

ALGERIA
C.M.P.R. Sarl
23 Rue Lalla Fatma N'Soumeur Hassen
Badi El-Harrach, Algeri
Tel. +213 21 82 70 69
tn.cmpr@yahoo.fr

EGYPT
Egyptian Engineering
Shop 6 building no 1 Jordan co.
10th Of Ramadan City
Tel. +20554368385
Fax: +20554368385
info@eefhydropneu.com
www.eefhydropneu.com

ALKHAMIS Hydraulic Company
A/6 Elfaroqia Buildings -Gesr
El Suis St., El Nozha Cairo
Tel. +20 2 26206391/3/2
Fax: +20 2 26206394
gkhamisimp@gmail.com
www.alkhamis-eg.com

GHANA
Cemix Limited
34 SPINTEX ROAD-ACCRA-GHANA-WEST
Tel. +233 0302 817030
sales@cemixghana.com
www.cemixghana.com

MOROCCO
R2i TFZ
Ilot 87, 1er étage, Bureau 20,
zone franche d'Exportation Tanger
Tel. +212 539 39 10 17
r2itfz@r2imaroc.ma
www.r2itfz.com

TUNISIA
L'Equipement moderne
86, Av. de Carthage, 1000, Tunisi
Tel. +216 71 343844
equipement.moderne@planet.tn
www.equipementmoderne.com.tn

Technical information are provided for informative purpose only and can be subject to change without prior notice

ASIA

SAUDI ARABIA
Arabian Universal Establishment for Trading
Southern Shopping Center, P.O BOX 3105
21471, Jeddah
Tel. +966 26 477159
bassam@aue-co.com
www.arabianuniversal.com

CHINA
Pneumax Pneumatic
Equipments Co., Ltd.
No. 76, Jinma Rd., Jiufu Economic
Development Zone, Jiuting Town
201615, PRC, Shanghai
Tel. +86 (21) 57763100
sales@pneumaxchina.com
www.pneumaxchina.com

UNITED ARAB EMIRATES
Fine Industrial & Agri ENG. Services
P. O. BOX 5763, Sharja UAE
Tel. +971 (6) 5335434
fineinds@emirates.net.ae

PHILIPPINES
Integrated Hydro-Pneumatic Systems, Inc.
N°4 St. Thomas Avenue,
Lopez Commercial Area
Sucat, Parañaque City
Tel. +632 02 820-0569
integhps@iconex.net

JORDAN
Al Sultan Company
P.O. Box 620996
11162, Amman
Tel: + 962 6 4753764
info@alsultanco.com
www.alsultanco.com

INDIA
Pneumax Pneumatic
India Pvt. Ltd.
D-82, Hosiery Complex, Phase-II extn.
201305, Noida, UP
Tel. +91 (120) 4352560 / 61 / 62
info@pneumax-india.com
www.pneumaxindia.com

INDONESIA
Managed by Pneumax Singapore Pte Ltd

PT. Mutiara Citramulia Teknindo
Ruko Karawaci Residence Blok A1,
No. 17 Jl. Raya
Legok. Bojong Nangka Kelapa Dua
Serpong-Tangerang 15810, Banten, 15810,
Giacarta
Tel. +62 21 29324792
pneumaxmct@cbn.net.id
www.pneumaxspa.com/en

IRAN
Ital Electro Pneumatic
NO. 204-2ND FLOOR-TAGHINIA
BLDG-SOUTH SA'ADI STREET
114715719, Teheran
Tel. +98 (21) 33919177
info@italpneum.com

ISRAEL
Ilan & Gavish
Yokneam Ilit 20692
POB 335, Soltam Site
Tel. +972 3 9221824
mail@ilan-gavish.com
www.ilan-gavish.co.il

LEBANON
Yammine Trading Company SARL
Boushrieh, Industrial City, P.O. Box 90 684
Jdeideh, El Metn 1202
2060, Beirut
Tel. +961 1 885520
info@yamminetrading.com
www.yamminetrading.com

MALAYSIA
Managed by Pneumax Singapore Pte Ltd
PSI Pneumatic Control Sdn Bhd
4M (1) Desa Universiti Commercial Complex,
Jalan Sungai Dua
11700, Penang
Tel. +60 4 6592627
sales-psi@airdynamics.com.sg

OMAN
Muscat Pneumatic System & Project LLC
Shop # 1484, Building # 1450B,
P.O. Box 105 PC: 120,
Muscat, Sultanate Of Oman
Tel. +968 93989398
sales@muscat-pneumatic.com

PAKISTAN
Fluid Tekhnik
Suite 101-104 Industrial Town Plaza, Opp. Sind
Madressah, Shahrah-e-Liaquat
74000, Karachi
Tel. +92 (21) 2410335
info@fluid-technik.com.pk
www.fluid-technik.com.pk

SINGAPORE
Pneumax Singapore Pte Ltd
51, Ubi Avenue 1/ 01-16,
Paya Ubi Industrial Park
408933, Singapore
Tel. +65 6392 0581
sales@pneumax.com.sg
www.pneumax.com.sg

SYRIA
Al Rowad Trading
P.O. BOX. 12806
Damasco
Tel: +963 944 228 955
alrowadtrading01@hotmail.com

THAILAND
Thai Agency Engineering Co. LTD
9 Soi Yasoop 2, 2nd-3rd Floor,Vorasin
building,Vipavadirangsit Road,Ladyao
10900, Chumphon
Tel: +66 (2) 6915900
taec@bkk.loxinfo.co.th
www.thai-a.com

OCEANIA

AUSTRALIA
Air Automation Group Pty Ltd
15 Broadhurst Rd,
Ingleburn NSW 2565
Tel. +61 02 9618 6777
sales@airautomation.com.au
www.airautomation.com.au

NEW ZEALAND
Treotham Automation Pty Ltd
Level 4, 21 Putney Way,
Manukau Auckland 2104
Tel. +64 9278 6577
Fax: +64 9278 6578
info@treotham.co.nz
www.treotham.co.nz

PNEUMAX S.p.A.
Via Cascina Barbellina, 10
24050 Lurano (BG) - Italy
P. +39 035 41 92 777
automotive@pneumaxspa.com
www.pneumaxspa.com

D.CAT.18-EN-REV.A-07/2022