Fluid Control System

E-7.5






ROTEX

Engineering For The Future

INDEX

CHAPTER	CONTENTS	PRINTED PAGE NUMBER	PDF PAGE NUMBER
1	**COMPANY PROFILE**	4-5	4-5
2	**INFRASTRUCTURE**	6-8	6-8
3	**DESIGN FEATURES**	9-18	9-18
	SOLENOID	9-13	9-13
	2/2 DIRECT ACTING NC SOLENOID VALVE	13	13
	3/2 DIRECT ACTING SOLENOID VALVE, VALVE WITH ALL PORTS IN BODY	14	14
	3/2 DIRECT ACTING HIGH ORIFICE, HIGH PRESSURE SOLENOID VALVE	15	15
	2/2 HYTREL DIAPHRAGM, POPPET DESIGN SOLENOID VALVE	16	16
	3/2, 5/2 PILOT OPERATED SOLENOID VALVE	17	17
	5/2 PILOT OPERATED INLINE POPPET SOLENOID VALVE	18	18
4	TERMINOLOGY, ISO SYMBOL, ORDERING OPTION, CODE, ORDERING EXAMPLE, GUIDELINES TO USE CATALOGUE, PRODUCT GENERAL FEATURES	19-30	19-30
5	**2 PORT SOLENOID VALVE**	71-114	31-78
	2/2 DIRECT ACTING NORMALLY CLOSED, OPEN SOLENOID VALVE	73-82	33-43
	2/2 DIRECT ACTING NC/ NO (ALL PORTS IN BODY) SOLENOID VALVE	83-84	44-45
	2/2 DIAPHRAGM OPERATED NC/ NO SOLENOID VALVE	85-96	46-60
	2/2 POPPET OPERATED NC/ NO SOLENOID VALVE	97-100	61-64
	2/2 ISOLATED PISTON EXTERNAL AIR OPERATED NC/ NO SOLENOID VALVE	101-102	65-66
	2/2 ISOLATED PISTON EXTERNAL AIR OPERATED BI DIRECTIONAL SOLENOID VALVE	103-104	67-68
	2/2 AIR OPERATED NC/ NO VALVE	105-108	69-72
	2/2 HIGH PRESSURE DIRECT ACTING VALVE	109-114	73-78
6	**3 PORT SOLENOID VALVE**	115-152	79-123
	3/2 DIRECT ACTING NC/ NO/ UNIVERSAL SOLENOID VALVE	117-126	81-91
	3/2 DIRECT ACTING NC/ NO/ UNIVERSAL SOLENOID VALVE (ALL PORTS IN BODY)	127-128	92-95
	3/2 DIRECT ACTING HIGH ORIFICE UNIVERSAL SOLENOID VALVE	129-134	96-102
	3/2 INTERNAL PILOT OPERATED NC/ NO SOLENOID VALVE	135-138A	103-107
	3/2 INTERNAL PILOT OPERATED NC/ NO SOLENOID VALVE	138B-138C	108-109
	3/2 INTERNAL/ EXTERNAL PILOT OPERATED UNIVERSAL SOLENOID VALVE	139-144	110-115
	3/2 AIR OPERATED VALVE	145-146	116-117
	3/2 NC/ NO HIGH ORIFICE VALVE	147-148	118-119
	3/2 NC/ NO HIGH PRESSURE VALVE	149-152	121-123
7	**5 PORT SOLENOID VALVE**	153-181	124-155
	5/2 SINGLE/ DOUBLE SOLENOID VALVE	155-158B	126-131
	5/2 SINGLE/ DOUBLE SOLENOID VALVE	159-162	132-135
	5/2 SINGLE/ DOUBLE SOLENOID INLINE POPPET VALVE	163-166A	136-140
	5/2 AIR OPERATED, AIR RETURN VALVE	167-170	141-144
	5/2 HIGH ORIFICE SOLENOID VALVE	171-172	145-146
	5/2 HIGH PRESSURE SOLENOID VALVE	173-176	147-150
	5/3 CENTER OFF/ PRESSURIZED/ EXHAUST SOLENOID VALVE	177-181	151-155
8	**SUB BASE MOUNTED SOLENOID VALVE**	183-212	156-186
	2/2 DIRECT ACTING NC/ NO SOLENOID VALVE	185-188	158-161
	3/2 DIRECT ACTING NC/ NO/ UNIVERSAL SOLENOID VALVE	189-192	162-165
	3/2 INTERNAL PILOT OPERATED NC/ NO SOLENOID VALVE	192-196	165-170
	5/2 SINGLE/ DOUBLE SOLENOID VALVE	197-202	171-173
	5/2 SINGLE/ DOUBLE SOLENOID VALVE	197-202	174-176
	3/2, 5/2 AIR OPERATED VALVE	203-208	177-180
	3/2, 5/2 AIR OPERATED VALVE	207-208	181-182
	MANIFOLD	209-212	183-186

INDEX

CHAPTER	CONTENTS	PRINTED PAGE NUMBER	PDF PAGE NUMBER
9	**ENGINEERED VALVE**	213-284	187-254
	VALVE WITH INTRINSICALLY SAFE SOLENOID	214-227	188-201
	MANUAL RESET SOLENOID VALVE	228-232	202-206
	TAMPER PROOF MANUAL RESET SOLENOID VALVE	233-235	207-209
	MANUAL RESET VALVE WITH INTRINSICALLY SAFE SOLENOID	236-238	210-212
	MANUAL RESET OFF SOLENOID VALVE	239-242	213-216
	VALVE WITH LOW POWER SOLENOID	243-247	216-221
	VALVE WITH LATCH SOLENOID	248-252	222-226
	REDUNDANT SOLENOID	253-254	227-228
	PORT CONNECTION	255-284	229-254
10	**CUSTOMIZED PRODUCT**	285-390	258-360
	VALVE FOR PETROL, LPG, CNG, WATER DISPENSING	286-287	258-259
	VALVE FOR TERMINAL GANTARY AUTOMATION	288-291	260-263
	VALVE FOR SUGAR PLANT	292-293	264-265
	VALVE FOR CEMENT PLANT AIR BLASTER	294	266
	3/2 VALVE FOR CEMENT PLANT AIR BLASTER	295	267
	VALVE FOR TYRE INFLATOR	296-297	268-269
	VALVE FOR CARBONATED WATER	298	270
	FAST ACTING VALVE	299	271
	VALVE FOR STEAM, HOT WATER	300-301	272-273
	VALVE FOR COMPRESSOR UNLOADING	302-303	274-275
	VALVE WITH TIMER FOR DRAIN	304	276
	NAMUR VALVE	305-308	277-278
	3/2 DA NAMUR VALVE	309-310	279-280
	3/2 DA NAMUR VALVE	311-312	281-282
	3/2 DA REGULATING NAMUR VALVE	313-314	283-284
	3/2 DA ON/OFF REGULATING NAMUR VALVE	315-316	285-286
	5/2, 3/2 CONVERTIBLE NAMUR VALVE	317-318	287-288
	5/2, 3/2 CONVERTIBLE NAMUR VALVE	319-322A	289-293
	5/2, 3/2 CONVERTIBLE SPOOL NAMUR VALVE	323-326	294-297
	3/2 DA LOW POWER NAMUR VALVE	327-328	298-299
	3/2 DA REGULATING LOW POWER NAMUR VALVE	329-330	300-301
	5/2, 3/2 DA REGULATING LOW POWER NAMUR VALVE	331-336	302-307
	5/2, 3/2 CONVERTIBLE IS NAMUR VALVE	337-340	308-311
	BAG FILTER/ DUST COLLECTOR/ PULSE JET VALVE	341-346	312-315
	28 NB MINIATURE SOLENOID PULSE JET VALVE	347-348	316-317
	50 NB DOUBLE DIAPHRAGM, PULSE JET SOLENOID VALVE	349-350	318-319
	40 NB DOUBLE DIAPHRAGM, MINIATURE SOLENOID PULSE JET VALVE	351-352	320-321
	25 NB DRESSER NUT PULSE JET SOLENOID VALVE	353-354	322-323
	40 NB DRESSER NUT DOUBLE DIAPHRAGM PULSE JET SOLENOID VALVE	355-356	324-325
	TANK MOUNTED PULSE JET VALVE	357-358A	326-328
	TANK MOUNTED DOUBLE DIAPHRAGM PULSE JET VALVE	359-368	329-338
	PILOT VALVE	369-370	339-340
	VALVE BLOCK	371-372	341-342
	PIULSE JET VALVE	373-377	343-347
	GAS OVER OIL CONTROL CABINET AND VALVE	378-390	348-360
11	**ENGINEERING SECTION**	391-435	361-439
	WORKING PRINCIPLE	391-397	361-367
	DEFINITION IDENTIFICATION AND MARKING DETAILS	398-401	368-371
	FLUID COMPATIBILITY CHART	402-403	372-373
	INSTALLATION INSTRUCTION, PED. ATEX, GOST, APPROVALS	404-411	374-381
	FLOW CHART CONVERSION	412-415	382-385
	SELECTION CRITERIA, BODY MATERIAL, SEAL, ORIFICE, MANUAL OVERRIDE SOLENOID	416-435	386-393
	SOLENOID	425-434C	395-438
	BARRIER	435	439
12	**SPECIAL VALVE**	436-440	440-444
13	**OTHER CATALOGUES**	441	445
14	**DATA REQUIRED FOR ORDERING VALVE**	442-450	446-449

ROTEX
Engineering For The Future

COMPANY PROFILE

1

ROTEX group was founded in year 1967 by chairman Mr. Jitendra Shah, starting with manufacturing and sale of textile machines and special purpose machines for construction, metal and environmental sectors

The vision behind the foundation of the company was to create on enterprise thriving on advanced technology, agility and continuous growth. The same is reflected in the group's vision and mission, and most importantly " Trust in people's abilities"

VISION:
To achieve excellence at all cost and improve upon it in every thought and action.

MISSION:
To reach a leadership position in industry through qualitative excellence
And
offering ideal Techno-economical solution to the customer.

Retain leadership through continual upgradation of technologies, capabilities and enhancement of product range in sync with emerging market trends

The philosophy has driven the company today into the world of controls and automation with solutions in fluid control valve automation and pneumatics. The company serves both process automation and industrial automation from its manufacturing facilities located in western India

"Rotex Automation Limited" is a part of the ROTEX group, engaged in Design, Development and Manufacturing of products for Fluid control like Solenoid valves, Pneumatic valves, Pneumatic Control Panels and other related solutions

ROTEX have manufacturing facilities located at Vadodara and Vithal Udyognagar

The important Milestones in the company are:

1967 Inception of ROTEX Dombivli

1976 Commenced with Manufacture of solenoid valves at Dombivli

1983 Manufacture of Solenoid valves shifted to Vadodara

1988 Started manufacturing at Vithal Udyognagar

2000 Certified for ISO 9001

2003 ATEX approval for Explosion Proof (Ex d) solenoid valve

2006 ATEX approval for Intrinsically safe (Ex ia) solenoid valve

2007 Solenoid valve program certified for PED.

2008 ATEX approval for moulded type (Ex m) solenoid valve

2008 INMETRO (Brazil) approval

2010 GOST (Russia) approval

MAJOR INDUSTRIES SERVED

• Automobile • Cement • Chemical • Dairy • Electronics • Engineering • Fertilizer • Food Processing • Glass Industry
• Hydro - Carbon (Oil and Gas) • Metallurgical Manufacturing • Medical Equipment • Material Handling • Machine Tools • Navy
• Nuclear Power Plant • Oil and Gas • Off Shore • Paper • Petrochemical • Pharmaceutical • Printing and Packaging • Railway
• Refinery • Sugar • Steel Plant • Textile • Thermal Power Plant • Water Treatment

Specifications are subject to change without notice

COMPANY PROFILE

CAPABILITY



ROTEX is a leading manufacturer of solenoid Valves and air operated valves with ability to design and develop customize solutions for given applications.

- Port : 2, 3, 4 and 5
- Solenoid Enclosure : Weather Proof and Explosion Proof
- Body material : Aluminium, Brass and Stainless Steel
- Orifice : up to 80 mm,
- Pressure : Vacuum to 400 bar

ROTEX
Engineering For The Future

INFRASTRUCTURE



Manufacturing facility at Unit I Vadodara

Around 20,000 sq. meter area, fully equipped with latest manufacturing facility, and R and D center



Design office

Team of engineers working on solid work platform, carrying out prototyping and validation for new product development and design modification

2



Machine shop at Unit I

Houses advanced CNC machines, SPM's and other supporting machines



Machine shop at Unit II

Following world renowned management practical like 5S KAIZEN and LEAN

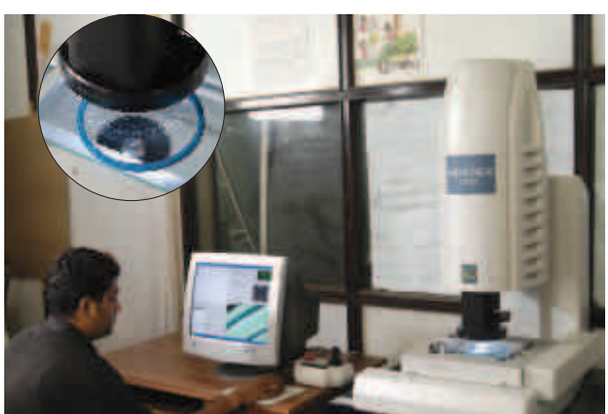

Testing Equipment - Optical Measurment



Testing Equipment - Surface Finish

Specialized testing equipment for checking seals, gaskets, surface finish, spring loads etc.

INFRASTRUCTURE



Solenoid Production



Solenoid Encapsulation

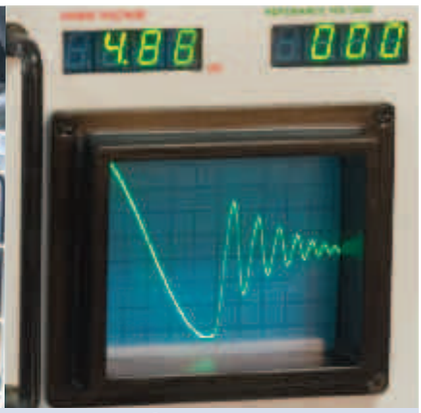

Surge Test

Complete in house facility for solenoid manufacturing using CNC winding machines and fully automatic machine for epoxy mixing and dispensing under vacuum. All Solenoids are subject to surge test, dielectric test, insulation resistance and resistance test, to detect any flaw in the solenoid



Assembly Line

Dust free assembly lines with fully automatized testing



Automatic Computerized Testing

PLC based testing rigs, transfers each reading of the valve to computer server. Thus offering complete traceability for each valve



Product Display

Product Display area



Training

Well equipped conference room for routine employee, customer training

INFRASTRUCTURE



Endurance Test

Life cycle monitoring room having a PLC with test operation with feed back, checking up to 100 million cycles



Environmental Test

Thermal aging and dry heat test from -70 °C to 250 °C

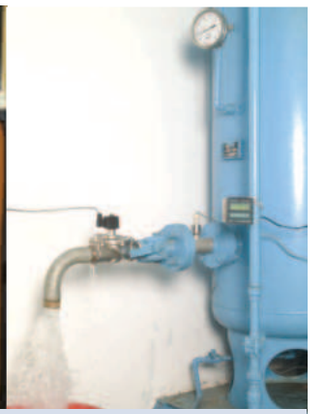

Flow Test

Flow testing Equipment to measure flow factor up to 3” valve size



Helium Leak Test

In house facility to perform seat and body Helium leak test under vacuum with full pressure drop. Capable of measuring leak up to 1 x 10^{-10} cc/ sec of Helium

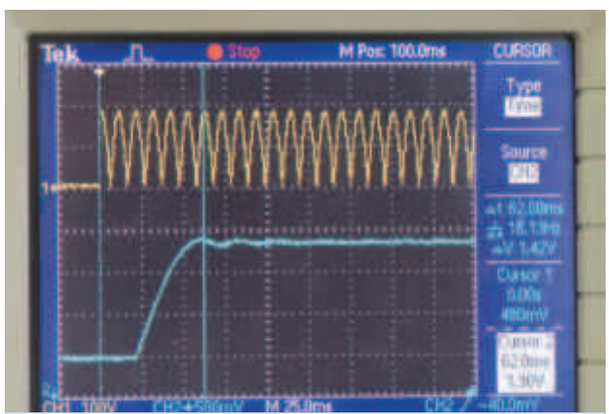

Response ON/ OFF Time

Measuring pressure curve for ON/ OFF response time

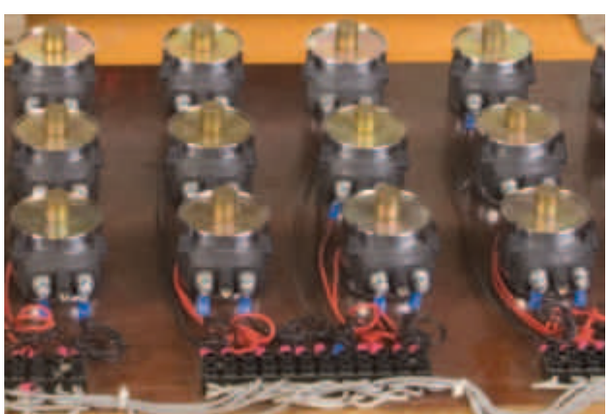

Burn-in Test

Healthiness of the solenoid is checked by keeping solenoid continuously energized, providing 30% high power for 168 hrs. change in resistance is measured



Customized Testing Equipment

Customized testing equipment developed for high-pressure testing of 80 NB valve up to 400 bar gas pressure

DESIGN FEATURES

SOLENOID

Void space between winding wire filled with Epoxy for better heat transfer, there by lower temperature rise

Appropriate selection of thickness and insulation of winding wire for long life

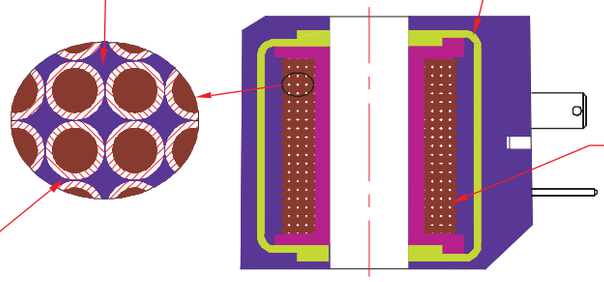

'O' Shape core for efficient magnetic linkage
- Lower pulling force

More winding for
-Lower temperature rise
-better insulation life

OPERATOR

Floating Seat for longer seal life

Non Sliding (Gap between Plunger and Core tube)

Profiled shaped Nozzle for Longer seat life

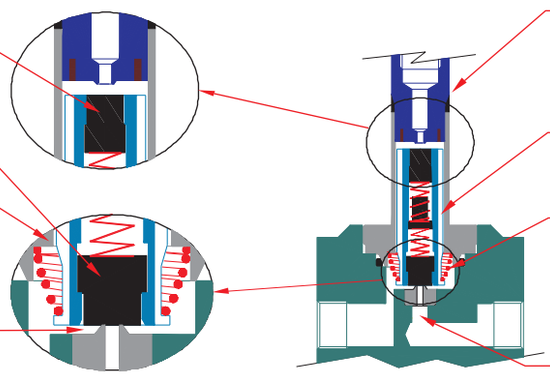

Efficient operator offering excellent Power to Cv relation

SS 430 Plated Plunger for higher corrosion resistance

Self aligning Spring

Larger hole for higher flow factor

VALVE

No stress on Seat Seal while seating

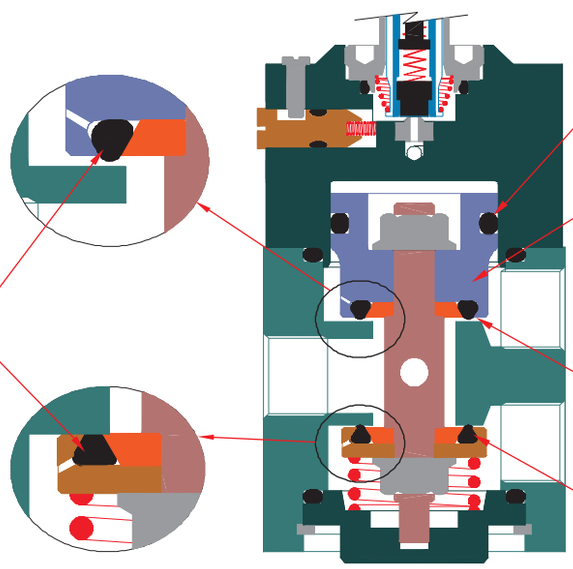

Seals do not cross holes while changing ports

Well supported Poppet assembly

Quicker lower stroke for
-Full opening
-Faster operation
-Large flow

Positive Sealing
-Longer Life

3

ROTEX
Engineering For The Future

DESIGN FEATURES

PRESSURE, POWER AND FLOW FACTOR

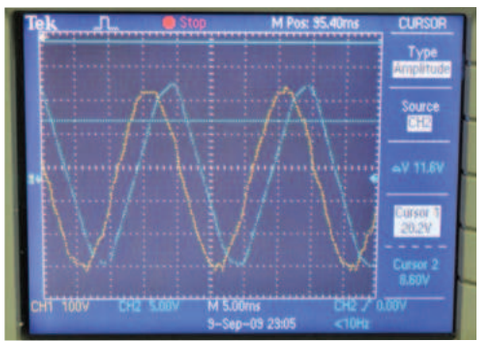

Many time higher power consumption (Watt) does not mean higher pulling force

Readings on the oscilloscope and comparative chart clearly indicate that in spite of higher power consumption some solenoid fail to achieve as much pulling force as ROTEX low Watt solenoid does

Higher Watt requirement indicates loss of magnetic flux in a solenoid rather than capturing and concentrating to the required point

ROTEX solenoid is designed to consume low Watt with higher pulling force and it ensures:

- Low temperature rise
- Long life for electrical contacts
- Less VA capacity of transformer
- Lower surge or back voltage

Manufacturer	Orifice(mm)	Flow factor.Cv	Pressure kg/cm^2	Watt
ROTEX	1.2	0.049	0 - 20	6
X	1.2	0.042	0 - 6	6
Y	1.2	0.035	0 - 11	11
Z	1.2	0.049	0 - 20	20

INRUSH

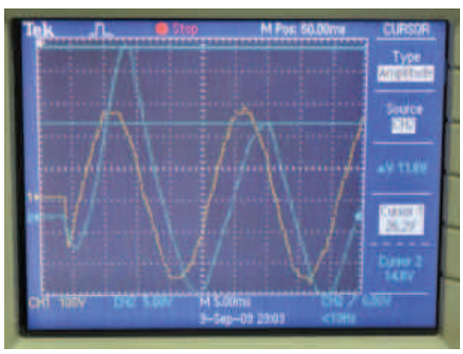

When the solenoid does not remain in energized or de-energized condition for a long time,

INRUSH is the factor for high temperature rise in the solenoid as compared to the continuously energized solenoid

When INRUSH is more then 1.5 times holding power, it is high enough to damage the insulation of the coil, though INRUSH is only for a few milliseconds

This happens due to the poor design of the solenoid valve that leads to complex ways of applying epoxy insulation to solenoid which hardly safeguards the coil

ROTEX attacks root of the problem

It's design guarantees low INRUSH i.e. INRUSH will never exceed 1.5 times holding power

So low temperature rise in the solenoid and no damage to the insulation

ROTEX Recommends Pilot Operated valve to avoid high INRUSH caused by larger stroke in Direct Acting Valve having large orifice

Life-time performance of the solenoid, irrespective of mounting on any type of ROTEX valve

Specifications are subject to change without notice

DESIGN FEATURES

SURGE VOLTAGE



Built-in Surge Suppressor

When you switch OFF a solenoid, how much back voltage can it create and what damage can it do to your connected electronic equipment?

Just guess?

The back surge can be as high as 10,000 Volts, and it can blow up or malfunction all connected electronic equipments

And may damage the coil insulation

The solution lies right at the design level to provide surge suppressor

And ROTEX never fails on the safety solution in the design of a solenoid

With the inclusion of a surge suppressor in ROTEX solenoid, the back voltage is restricted to less than 500 Volts

That is the reason why every ROTEX Solenoid above 10 Watt has a built-in surge suppressor

To minimize the explosion risk, all ROTEX flame/ explosion proof solenoid have built-in surge suppressor, irrespective of power consumption

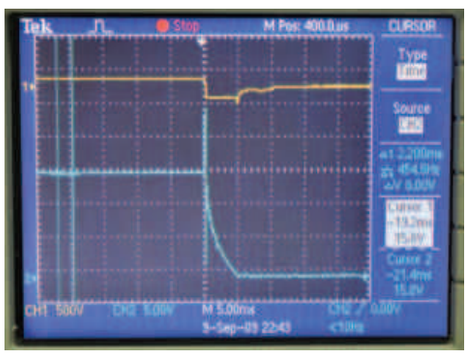

Without Surge Suppressor
220V DC 11 Watt Solenoid

Surge generated while switching OFF 220V DC 11 W solenoid without surge suppressor is 10350 V

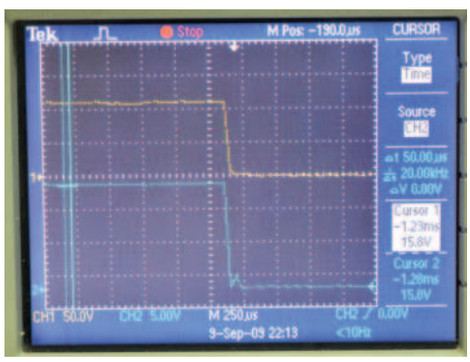

220V DC 11 W Solenoid
With Inbuilt surge suppressor

Surge generated in 220V DC 11 W solenoid with inbuilt surge suppressor is 200 V

3

DESIGN FEATURES

TEMPREATURE RISE

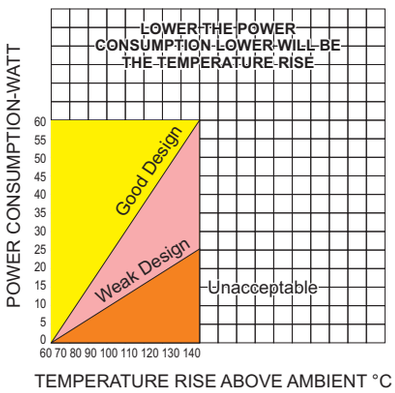

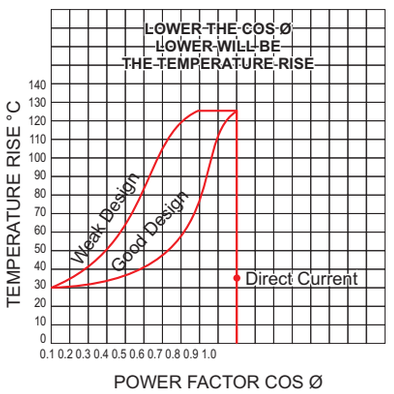

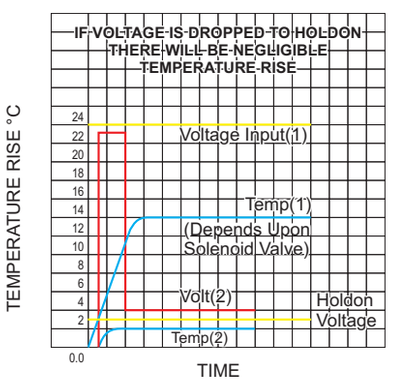

For solenoid, rise in the temperature is not desirable

The temperature rise beyond limit can destroy the solenoid insulation

Weakness in the design of efficient solenoid, leads to higher Watt consumption and ineffective utilization of power

Both leads to rise in the temperature

Strength of ROTEX solenoid design is, lowest Watt consumption and maximum utilization of power by improved magnetic circuits

Now, that leads to the higher pulling force and holds plunger with minium rise in the temperature

For the application of higher Orifice, to increase the safety of Solenoid, ROTEX recommends the pilot operated valve instead of high Watt direct acting valve

HOW TO MEASURE TEMPERATURE RISE

Measure resistance of the coil R_a in Ohm

at Room temperature t_a in °C

Keep coil energized at 20% higher than rated voltage, till change in surface temperature of the solenoid housing is less than 1 °C per hour.

Now measure resistance of the coil Rt in Ohm.

The temperature rise (Δt) for copper wound solenoid can be calculated as under

$$\Delta t = \frac{(R_t / R_a) - 1}{0.00393}$$

Ideally maximum temperature rise of the continuously energized solenoid as measured by change in coil resistance method shall not exceed 70 °C

3

Specifications are subject to change without notice

DESIGN FEATURES

SOLENOID

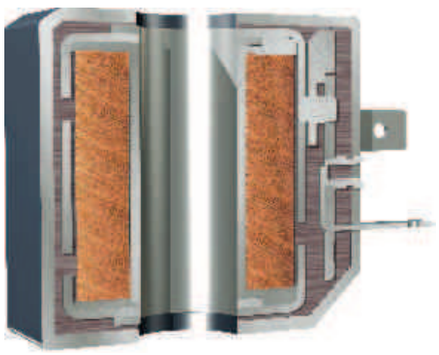

- Interchangeable among all Voltage, Current Variations of Explosion proof Ex d, Ex ia, Ex m and Weather Proof Enclosures
- Up to IP68 protection in various enclosure type available
- 'O' Shaped energizer for improving magnetic linkage
- More copper for reducing temperature rise of the solenoid
- Hermetically sealed wiring for better insulation
- Can handle wide voltage and current variation
- Can be rotated 360°

2 PORT NORMALLY CLOSED VALVE TYPE 20101

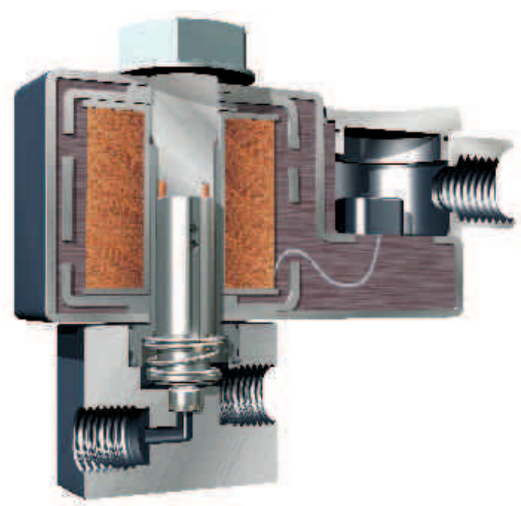

Valve Type	20101
Sealing	Positive Sealing
Vibration	Up to 9g
Construction	Positive Sealing, Direct Acting, Non sliding parts, provides
	higher flow rates, positive sealing against over pressure
Mounting	In any position
Flow	High flow rate due to clear flow path
Efficiency	Excellent Power to performance ratio
Unique	Wide range to suit variety of application
Speed	Up to 1000 cpm

ROTEX
Engineering For The Future

DESIGN FEATURES

3 PORT VALVE TYPE 30125

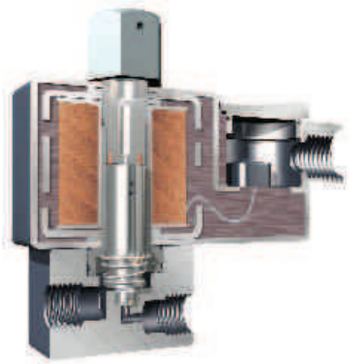

Valve Type	30125
Sealing	Positive Sealing
Vibration	Up to 9g
Construction	Positive Sealing, Direct Acting, Non sliding parts, provides
	higher flow rates, positive sealing against over pressure
Mounting	In any position
Flow	High flow rate due to clear flow path
Efficiency	Excellent Power to performance ratio
Unique	Wide range to suit variety of applications
Speed	Up to 1000 cpm

3 PORT VALVE HAVING ALL PORTS IN BODY TYPE 30170



Valve Type	30170
Sealing	Soft cushioned sealing for long life
Vibration	Up to 9g
Construction	Non sliding and non choking. Pusher pins in high grade
	polymer for long life and high reliability
Mounting	In any position
Flow	High flow rate due to clear flow path
Efficiency	Excellent Power to performance ratio
Unique	All ports in body for easy maintenance
Speed	Up to 600 cpm

Specifications are subject to change without notice

DESIGN FEATURES

3 PORT HIGH ORIFICE DIRECT ACTING VALVE TYPE 30308

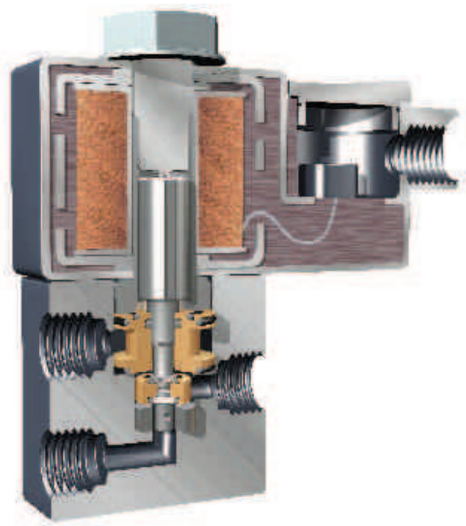

Valve Type	30308
Sealing	Positively energized soft cushioned sealing
Vibration	Up to 9g
Construction	Pressure balanced poppet type plunger, stem
	guided, burnished to minimize friction
Mounting	In any position
Flow	High flow rate due to clear flow path
Efficiency	Excellent Power to performance ratio
Unique	Universal usage due to Pressure balanced plunger design
	which also make these valves usable on bidirectional
	applications. All ports in body make it convenient for
	maintenance
Speed	Up to 800 cpm

3 PORT HIGH PRESSURE VALVE TYPE 30150

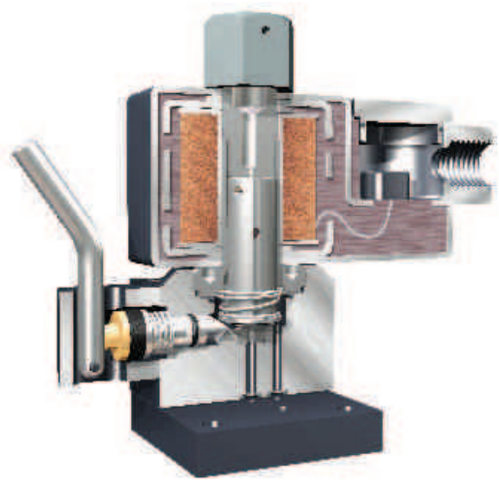

Valve Type	30150V02 (11W) / 30150V03 (8W)
Sealing	Spring Resilient PTFE Sealing
Vibration	Up to 9g
Construction	Non Sliding, Non Chocking with hard seat for long life
Mounting	In any position
Flow	High flow rate due to clear flow path
Efficiency	Excellent Power to performance ratio
Unique	Operating pressure 0-150 bar with manual override option
Speed	Up to 300 cpm

ROTEX
Engineering For The Future

DESIGN FEATURES

2/2 DIAPHRAGM OPERATED VALVE TYPE 24101

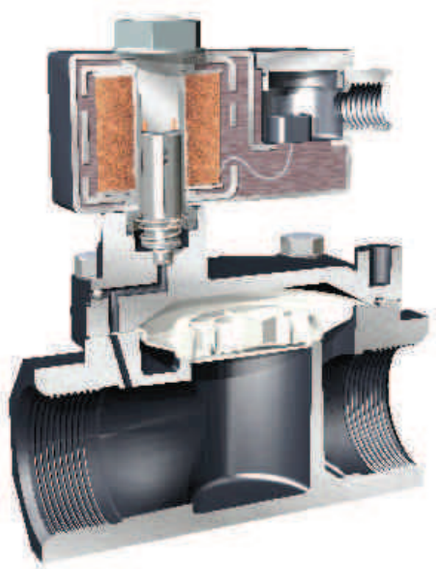

Valve Type	24101
Sealing	Soft, non impact seating for long life
Vibration	Up to 9g
Construction	Rolling diaphragm made from high grade polymer, spring
	less high flexing diaphragm, Wide temperature range
Mounting	In any position
Flow	High flow rate due to clear flow path
Efficiency	Excellent Power to performance ratio
Unique	Wide range to suit variety of applications
Speed	Up to 100 cpm

2/2 PISTON ACTUATED VALVE TYPE 21104

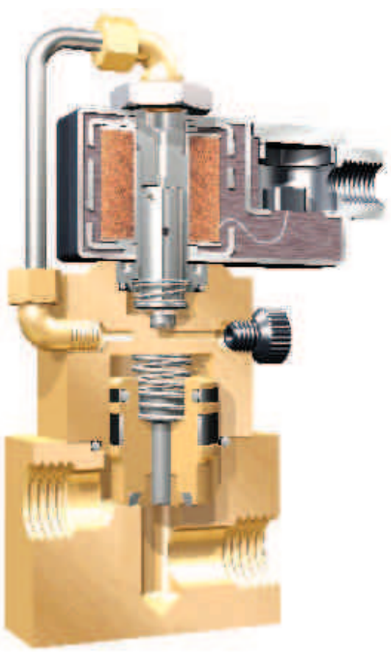

Valve Type	21104
Sealing	Positive, pressure assisted, soft cushioned
Vibration	Up to 9g
Construction	Heavy duty Poppet type, Non sliding parts, provides
	higher flow rates, positive sealing against over pressure
Mounting	In any position
Flow	High flow rate due to clear flow path
Efficiency	Excellent Power to performance ratio
Unique	Wide range to suit variety of applications
Speed	Up to 300 cpm

Specifications are subject to change without notice

DESIGN FEATURES

3/2 PILOT OPERATED VALVE TYPE 31119

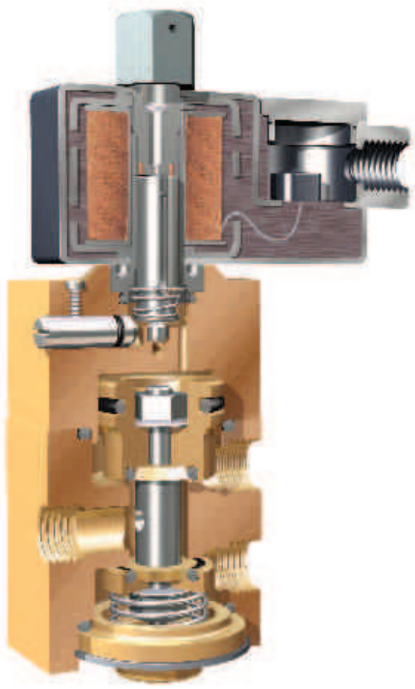

Valve Type	31119
Sealing	Positively energized soft cushioned sealing
Vibration	Up to 9g
Construction	Heavy duty Poppet type, Non sliding due to unique floating
	seals and burnished internals, fully guided for highly reliable
	operation
Mounting	In any position
Flow	High flow rate due to clear flow path
Efficiency	Excellent Power to performance ratio
Unique	Wide range to suit variety of applications
Speed	Up to 600 cpm

5/2 POPPET TYPE SINGLE SOLENOID VALVE TYPE 51400



Valve Type	51400
Sealing	Positive, pressure assisted, soft cushioned
Vibration	Up to 9g
Construction	Heavy duty Poppet type, Non sliding due to unique floating
	seals and burnished internals, fully guided for highly reliable
	operation
Mounting	In any position
Flow	High flow rate due to clear flow path
Efficiency	Excellent Power to performance ratio
Unique	Heavy duty construction for aggressive environments
Speed	Up to 1000 cpm

ROTEX
Engineering For The Future

DESIGN FEATURES

5/2 POPPET TYPE SINGLE SOLENOID VALVE TYPE 51432



Valve Type	51432
Sealing	Positive, pressure assisted, soft cushioned
Vibration	Up to 9g
Construction	Heavy duty Poppet type, Non sliding due to unique floating
	seals and burnished internals, fully guided for highly reliable
	operation
Mounting	In any position
Flow	High flow rate due to clear flow path
Efficiency	Excellent Power to performance ratio
Unique	Heavy duty construction for aggressive environments
Speed	Up to 500 cpm

5/2 INLINE POPPET SINGLE SOLENOID VALVE TYPE 51440

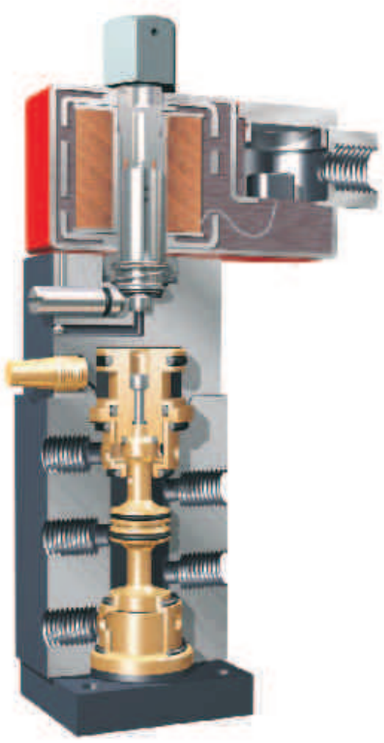

Valve Type	51440
Sealing	Unique sliding poppet sealing, pressure assisted
Vibration	Up to 9g
Construction	Poppet type, Non sliding due to unique floating seals on
	poppet and burnished internals, fully guided for highly
	reliable operation
Mounting	In any position
Flow	High flow rate due to clear flow path
Efficiency	Excellent Power to performance ratio
Unique	Compact, inline Poppet valves
Speed	Up to 1200 cpm

3

Specifications are subject to change without notice

TERMINOLOGY OF SOLENOID VALVE

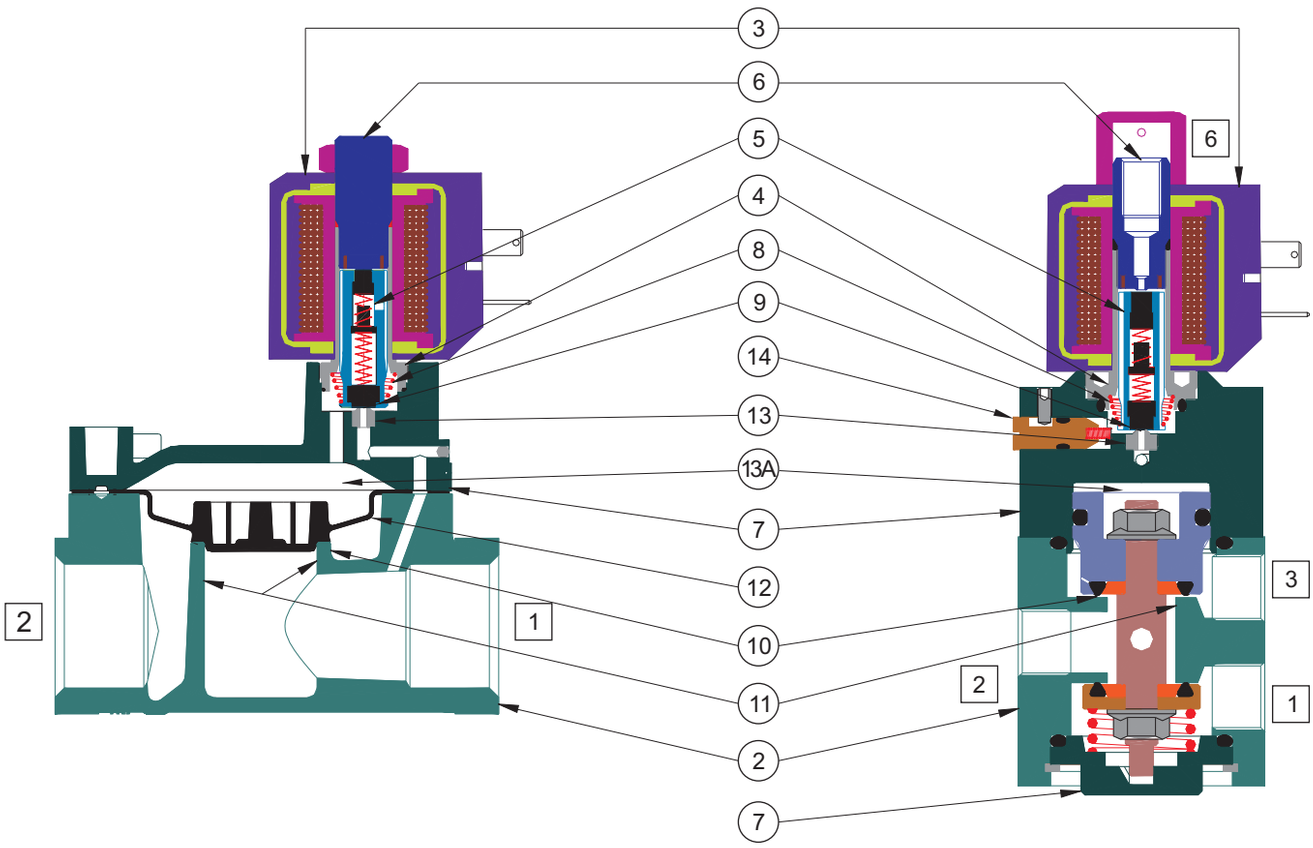

2 Valve Body :
Main part of the Valve in which Ports and main seat are located

3 Solenoid:
An Electromagnetic part of a Valve which includes coil, and enclosure

4 Guide Assembly :
SS 304 tube closed at one end. Plunger moves inside the bore of assembly

5 Plunger :
Made of SS 430F which has less residual magnetism. Plunger is moved by magnetic force generated by the Solenoid

6 Insert :
Pressed In the closed end of the guide assembly. Installed to Improve the Magnetic flux of the solenoid

7 Cover :
Cover on the Valve body. To which Guide assembly with inner parts are fitted

8 Plunger Spring :
This helps plunger to return to the original position When solenoid is de energized

9 Plunger Seat :
Sealing material on both end of the plunger which closes the pilot orifice

10 Valve Seat:
Geometry in the Valve body which creates internal seat

11 Main Orifice:
Main passage between inlet and outlet of the Valve

12 Bleed Orifice:
Small orifice located in the diaphragm or piston of pilot operated Valve to allow the inlet flow to pressurize the top side of diaphragm or piston

13 Pilot Orifice :
Orifice located in the cover of pilot operated Valve, which is opened or closed by the plunger

13A Pilot Chamber:
A chamber which when filled/ exhausted causes Valve to change position

14 Manual Actuator :
Provision to operate the valve manually in event of Power failure or testing

Specifications are subject to change without notice

ROTEX
Engineering For The Future

ISO SYMBOL

ACTUATION

(ATTACHED TO THE SIDE OF THE POSITION BLOCK INDICATING POSITION WHICH IS ATTAINED)

	SPRING
	SOLENOID
	INTERNAL PILOT + SOLENOID (PILOT CHAMBER FILLED TO CHANGE POSITION)
	INTERNAL PILOT + SOLENOID (PILOT CHAMBER VENTED TO CHANGE POSITION)
	EXTERNAL PILOT + SOLENOID (PILOT CHAMBER FILLED TO CHANGE POSITION)
	EXTERNAL PILOT + SOLENOID (PILOT CHAMBER VENTED TO CHANGE POSITION)
	AIR + PILOT OPERATED
	SPRING + SOLENOID
	MANUAL RESET FOR DIRECT ACTING
	MANUAL RESET FOR PILOT VALVE
	MANUAL OPERATED
	AIR OPERATED

VALVE CONFIGURATION SYMBOL

	POSITION OF THE VALVE
	3 NUMBER OF SQUARE BOXES INDICATES 3 POSITION VALVE
	CROSSING LINE AT BLOCK BORDER INDICATES NUMBER OF PORT eg. 3 PORT
	CONNECTION BETWEEN PORTS WITH FLOW DIRECTION ie PORT 1 BLOCKED, FLOW FROM PORT 2 TO PORT 3
	PORT IS BLOCKED
	3/2 UNIVERSAL DIRECT ACTING VALVE SOLENOID OPERATED, SPRING RETURN

2 PORT VALVE

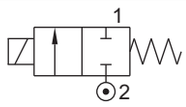	2/2 DIRECT ACTING NORMALLY CLOSED SOLENOID VALVE
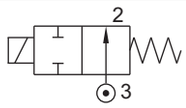	2/2 DIRECT ACTING NORMALLY OPEN SOLENOID VALVE
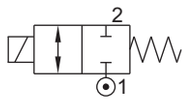	2/2 DIRECT ACTING BI DIRECTIONAL NORMALLY CLOSED SOLENOID VALVE
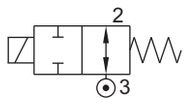	2/2 DIRECT ACTING BI DIRECTIONAL NORMALLY OPEN SOLENOID VALVE
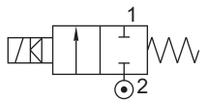	2/2 PILOT OPERATED NORMALLY CLOSED SOLENOID VALVE
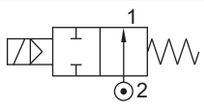	2/2 PILOT OPERATED NORMALLY OPEN SOLENOID VALVE
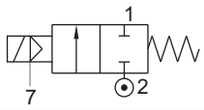	2/2 EXTERNAL PILOT OPERATED NORMALLY CLOSED SOLENOID VALVE
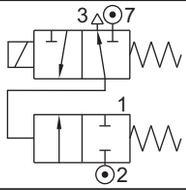	2/2 EXTERNAL PILOT OPERATED NORMALLY CLOSED SOLENOID VALVE
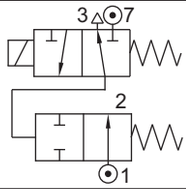	2/2 EXTERNAL PILOT OPERATED NORMALLY OPEN SOLENOID VALVE
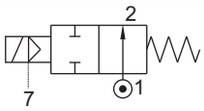	2/2 EXTERNAL PILOT OPERATED NORMALLY OPEN SOLENOID VALVE
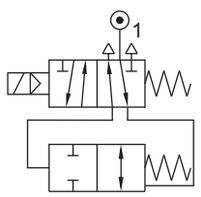	2/2 EXTERNAL PILOT OPERATED NORMALLY CLOSED/ OPEN BI DIRECTIONAL SOLENOID VALVE
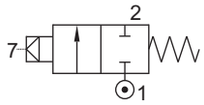	2/2 PILOT AIR OPERATED NORMALLY CLOSED VALVE
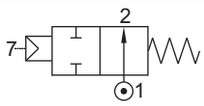	2/2 PILOT AIR OPERATED NORMALLY OPEN VALVE

ISO SYMBOL

3 PORT VALVE

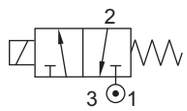	3/2 DIRECT ACTING NORMALLY CLOSED SOLENOID VALVE
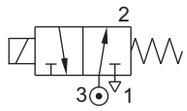	3/2 DIRECT ACTING NORMALLY OPEN SOLENOID VALVE
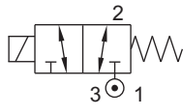	3/2 DIRECT ACTING UNIVERSAL SOLENOID VALVE
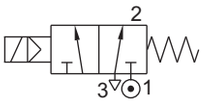	3/2 INTERNAL PILOT OPERATED NORMALLY CLOSED SOLENOID VALVE
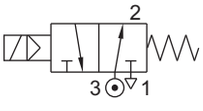	3/2 INTERNAL PILOT OPERATED NORMALLY OPEN SOLENOID VALVE
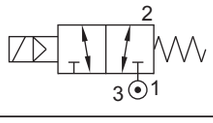	3/2 INTERNAL PILOT OPERATED UNIVERSAL SOLENOID VALVE
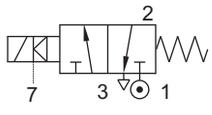	3/2 EXTERNAL PILOT OPERATED UNIVERSAL SOLENOID VALVE
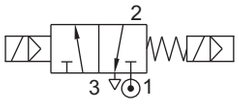	3/2 PILOT OPERATED NORMALLY CLOSED DUAL SOLENOID VALVE
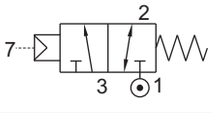	3/2 PILOT AIR OPERATED UNIVERSAL VALVE
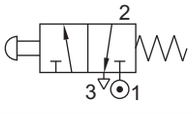	3/2 HAND OPERATED SPRING RETURN NORMALLY CLOSED VALVE

5 PORT VALVE

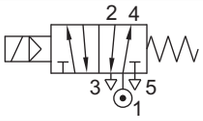	5/2 PILOT OPERATED SINGLE SOLENOID VALVE
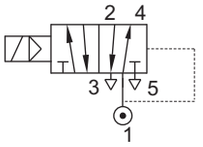	5/2 PILOT OPERATED SINGLE SOLENOID AIR RETURN VALVE
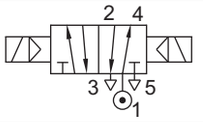	5/2 PILOT OPERATED DUAL SOLENOID VALVE
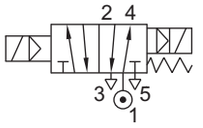	5/2 DUAL SOLENOID VALVE POWER FAIL TO RETAIN, AIR FAIL TO RESET
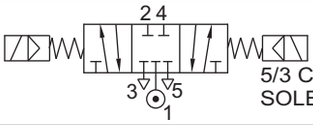	5/3 CENTRE OFF SOLENOID VALVE
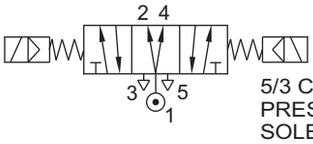	5/3 CENTRE PRESSURIZED SOLENOID VALVE
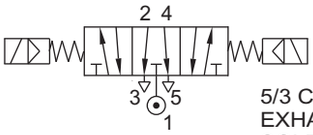	5/3 CENTRE EXHAUST SOLENOID VALVE
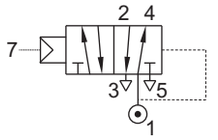	5/2 PILOT AIR OPERATED, AIR RETURN VALVE
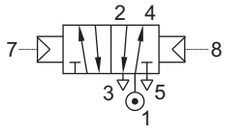	5/2 PILOT AIR OPERATED PILOT AIR RETURN VALVE

OPTION

VALVE

SUFFIX	
Nil	※
Ammonia	AM
Oxygen	OX
Nuclear	NP
Vacuum	VC
Cryogenic	SZ
Version	VXX
Latching	LC
Click Less	LN
Full Manual Reset	TP
Sandvik Operator	SO
Extended Pressure	EP
ATEX for non Electrical Valve	GD
Valve position Feedback	LSXX ※※
Leak Tightness (For Vacuum Application)	LT

SIL	※
NO	※
YES	SL

BODY AND INTERNALS		
BODY	INTERNAL	CODE
Aluminium	Aluminium, Brass, SS 316	0
Aluminium	SS 316	B1
BRASS	Brass/ SS 316	B2
SS 316	SS 316	B5
SS 316L	SS 316L	B9
CF8M	SS 316	B12
CF8	SS 304/ SS 316	B13
CF3M	SS 316L	B14
Aluminium Cast	Aluminium, Brass, SS 316	B15
Aluminium Cast	SS 316	B16
Brass Forging	Standard	B17
Brass (Electro Nickle Plated)	Standard	B2E
Brass (Extruded Forged Grade IS6912	Standard	B2F
Body CF8M Deckel ALU	Standard	B18
SS321	Standard	B19
SS316 Epoxy Painting	Standard	B5P
SS316	Standard with NACE	B5N
SS316L	Standard	B9N
BRASS	Brass Forging Electro Nick	BFE
B12N-CF8M	Standard with NACE	BTN

PORT CONNECTION			
SIZE	BSP	NPT	FLANGE
1/8”	1G	1R	-
1/4”	2G	2R	-
3/8”	3G	3R	-
1/2”	4G	4R	4F
3/4”	6G	6R	6F
1”	8G	8R	8F
11/4”	10G	10R	10F
11/2”	12G	12R	12F
2”	16G	16R	16F
21/2”	20G	20R	20F
3”	24G	24R	24F
4”			32F

SEAL	
MATERIAL	CODE
NBR	0 (-25 °C to 75°C)
EPDM	S1 (-50 °C to 130 °C)
VITON	S2 (-20 °C to 160 °C)
NEOPRENE	S3 (-30 °C to 100 °C)
VITON GLT	S2G (-40 °C to 160 °C)
PTFE	S4
PTFE + VITON	S8 (-20 °C to 200 °C)
PTFE + NBR	S9 (-30 °C to 200 °C)
HNBR	S10 (-30 °C to 90 °C)
HYTREL + NBR	S11 (0 °C to 80 °C)
PTFE + EPDM	S12 (-50 °C to 130 °C)
PTFE + HNBR	S15
HYTREL + VITON	S16
PEEK	S17
GFT	S18
FLOROSILICON	S19 (-60 °C to 190 °C)
PTFE + F.SILICON	S20 (-60 °C to 200 °C)
PTFE + VITON GLT	S21 (-40 °C to 180 °C)
PEEK + VITON	S22

MANUAL OVERRIDE	PRESSURE bar	STAYPUT	MOME-NTARY	CODE
No manual override				M0
Push and Turn	≤ 20	✓	✓	M6
Push MA	≤ 20		✓	M8
Push and turn with knob	≤ 20	✓	✓	M2
Lever without Backup Seal	≤ 40		✓	M5
Eccentric MA without Backup Seal	≤ 40	✓		M12
Lever for very high pressure	≤ 150		✓	M4
Eccentric MA	≤ 150	✓		M11
Push Button	≤ 20		✓	M1
Push MA with knob	≤ 20	✓		M9
Knob Type LC	≤ 20	✓		M7
ML MA	≤ 20	✓		M13
Locable MA	≤ 150	✓		M14
Lever tye Manual Reset MA	≤ 150	✓		M15
Electrical MA with Rotaing knob	≤ 150	✓		M16
Eccentric MA without Backup Seal with Rotaing knob	≤ 150	✓		M17

Nil Manual Override (M0)
Do not mention when opted for direct acting valve
Push N Turn Manual Override (M6) Provided as standard for internal/ external pilot operated valve. Do not mention when opted
Mention (M6) only when opted for direct acting valve
OIL Media Temperature Restricted from 0 °C to 100 °C

※ Please refer SIL Certificate for SIL Certificate Valve Model
※※ LSXX indicate the type of Limit Switch Element refer WN-1526

Specifications are subject to change without notice

OPTION

SOLENOID

VOLTAGE
6
12
24
27
38
42
48
72
110
120
125
220
230
240
256
440

CURRENT
50Hz
60Hz
DC

SIZE
8
14 (I)
18 (II)
13 (III)

SOLENOID ENCLOSURE	
WEATHER PROOF	
TYPE	
Flying Lead IP54	※
Flying Lead 600 mm	01
Flying Lead 1500 mm	04
Flying Lead 3000 mm	05
Flying Lead 625 mm 1/2" NPT	08
Terminal Box 1/2" NPT , IP67	16
Terminal Box M20 X 1.5, IP67	19
Plug in PG9 , IP67	22
Square Plug in, IP67	25
Open stud type, IP54	28
36 mm wide Plug in (size I), IP67	22
TB Multi Pin Connector, IP67	70
SS316L Cast, Terminal Box 1/2" NPT, IP67	16-3M-CO
SS316L Cast, Terminal Box M20X1.5, IP67	19-3M-CO

EXPLOSION PROOF				
TYPE	**CABLE ENTRY**			
	1/2" NPT	M20X1.5	3/4" NPT	M25X1.5
FPJB Ex d IIC, T4 OR T5 OR T6, IP66				
Horizontal Cable Entry	37	39		
Bottom Cable Entry	87NS	87MS		87
EXPLOSION PROOF COIL Ex e mb IIC, T6/ T5/ T4				
Horizontal Cable Entry -60 °C	58NS	58MS		58
Horizontal Cable Entry -40 °C	58LTNS	58LTMS		58LT
INTRINSICALLY SAFE SOLENOID WITH CIRCUIT, Ex ia IIC T6, IP67				
Bottom Cable Entry-III	66NS	66MS		66
Bottom Cable Entry-IV	62NS	62MS		62
LOW POWER INTRINSICALLY SAFE SOLENOID Ex ia IIC T6, IP67				
Plug in Solenoid	65CR (Cable entry PG9)			
Bottom Cable Entry-III, IV	71NS	71MS		71
Horizontal Cable Entry-III	67NS	67MS		67
FLDC (Dual Solenoid) Ex m IIC, T4 IP67				
Flying lead dual coil	60 (with LED)			
	61 (without LED)			

APPROVAL	
CCOE/PESO+BIS	※
CE-ATEX	01
IEC Ex+ATEX	01
INDIAN+ATEX	01B
UL	02
INMETRO+ATEX,	03
IEC Ex+ATEX+IN METRO+CuTR-EAC	03C
IEC Ex+ATEX+IN METRO+UL	03U
CuTR-EAC+ATEX	04
IEC Ex+ATEX+CuTR+UL	04U
KOSHA+ATEX	07
Ukraine	08
DGMS+CCOE/PESO+BIS	04
CE	CE

INSULATION	
Class F	※
Class H	H

SPECIAL VERSION	
Nil	※
Nuclear	NP
Corrosive Environment	
Latching	LC
Surge suppressor	
Full rectified	FR
LED	LD
Manual Reset	
Manual Latch	
Timer	TM
Cable Gland	CG
Low Power ※	LW-X
Latch with 2 Wires	
Temper Proof	
Full Manual Reset Cryogenic	SZ

LARGE ENCLOSURE	
Nil	※
Large enclosure	III

POWER	CODE			
	I	III	II	IV
1.8W	LW2	LW2		LW1.8
3.5W		LW3.5		
5W		LW5		LW5
6/ 8W	※	※	LW8	
13W			※	LW13
15W		LW15	LW15	
20W			LW20	
30W			LW30	

ENCLOSURE MATERIAL	
CODE	DESCRIPTION
※	Aluminium Cast Epoxy Powder Coated
CO	CF8M (Stainless Steel Cast)
CO-3M	SS316L, SS Cast

※NOTE : 1. For Solenoid with Special Version LW, X Indicate Power of the Solenoid Disconnected.
2. GOST R & GOST K approved.
Select CuTR approvaed coil (04) approved.

Refer to page 426 for avaibility of special versions, Solenoid size and enclosure

For IP68 weather proof protection, add suffix A to solenoid type 16,19,37,39,67,68,72,and73 e.g. 230V AC-16 A
Means Terminal box solenoid having 1/2" NPT(F) cable entry and IP68 weather proof protection

ROTEX
Engineering For The Future

DEFINITION

SPECIAL VERSION FOR SOLENOID

CORROSIVE ENVIRONMENT (CO)

Should be opted when environment is highly corrosive. It ensures that fasteners, solenoid enclosure including electrical contacts are of stainless steel. Select body material SS 316 or SS 304

e.g. 30309-5-2R-B5+III-110V-AC/DC-37-CO-FR-LW20

LATCHING (LC)

Any single solenoid Valve can be converted to pulse operated (dual solenoid) by opting for latch solenoid. The latch solenoid has two windings, three terminals and a permanent magnet to keep the plunger energized in the event of power failure

Opting to latch and de-latch Valve manually calls for special Valve

e.g. L3012-16-4R-B2+III-230V-50Hz-16-LC

SURGE SUPPRESSOR (SS)

Surge Suppressor is added to the solenoid for protecting the solenoid against high input voltage surge and also suppresses voltage spikes generated during power supply switching off

e.g. 51424-6-2R-B5+III-230V-DC-25-SS

LARGE ENCLOSURE (III)

Should be opted when larger termination area is desired or when a solenoid with lower temperature rise is required

available only for terminal box and Ex d solenoid enclosure

e.g. 30308-5-2R-B5+III-24V-DC-37

FULL WAVE RECTIFIED SOLENOID (FR)

The solenoid has built in full wave Rectifier. The solenoid is capable of operating with AC (50Hz/ 60Hz) as well as DC current. This option must be selected for Valve 30318 and 30138 operating with AC current.

Suppresses surges generated during switching OFF of the solenoid

e.g. 30308-5-2G+III-230V-50Hz-37-FR

SEQUENTIAL TIMER (TM)

Solenoid valve with solenoid option 25 can be supplied with electronic sequential timer for ON/ OFF application

SUFFIX FOR VALVE

AMMONIA SERVICE (AM)

ROTEX Valve suitable for Ammonia service or environment are offered without any copper or copper based alloy. Select Body material SS 304 or SS 316 only. Select option AM from Solenoid Special Version.

This feature is to be ordered in advance. The design of the Valve is different and has to be specially manufactured

e.g. 30125-AM-1.6-2G-B5+III-230V-50Hz-16-FR

OXYGEN SERVICE (OX)

ROTEX Valves suitable for Oxygen service are De-greased, cleaned and assembled in clean room environment. Select Body material SS 316 only. Select option OX from Solenoid Special Version

This feature is to be ordered in advance. The design of the Valve is different and has to be specially manufactured

e.g. 30125-OX-1.6-2R-B5+III-230V-50Hz-16-CO

VERSION CONTROL (VXX)

For improving performance of the valve its Design is modified. To identify correct Fitment of the spare parts, version is added

i.e. When design of the Valve type 21101V01 is further modified, Its type is changed to 21101V01

The spares of Valve type 21101, 21101V01 and 21101 may not be same

This is the design control number required only while ordering spares

This is not a very critical part of the Valve ordering code when complete solenoid valve is ordered

VALVE WITHOUT SOLENOID

Many of the ROTEX Solenoid Valves are capable of operating without affecting any of its performance when the solenoid is changed for voltage, current, enclosure. This provides flexibility to customer needing Valve and solenoid separately

ORDERING CODE

The ordering code of Solenoid Valve is made of Valve and Solenoid ordering code

VALVE + SOLENOID

VALVE

ORDERING CODE Solenoid Valve (Valve Code + Solenoid Code)

VALVE TYPE	SIL	SUFFIX	ORIFICE	PORT CONNECTION	BODY INTERNAL	MANUAL OVERRIDE	SEAL	MEDIA
P3012-R	SL	SO	5	2G	B5	※	S2G	※

ACCESSORIES VALVE, PORT		SIZE	VOLTAGE, CURRENT	ENCLOSURE	ENCLOSURE MATERIAL	SPECIAL	POWER
A3	+	III	24V DC	87NS	※	SS	LW 3.5

INSULATION	APPROVAL	SIL	ACCESSORIES SOLENOID
H	01	SL	B4

SPARES

SOLENOID KIT

ORDERING CODE Spare Solenoid

SOLENOID KIT	SIZE	VOLTAGE, CURRENT	ENCLOSURE	ENCLOSURE MATERIAL	SPECIAL	POWER
34	III	24V DC	87NS	※	SS	LW 3.5

INSULATION	APPROVAL	SIL	ACCESSORIES SOLENOID
H	01	SL	B4

SPARE KIT

ORDERING CODE Valve Spare Kit

SPARE KIT	VALVE TYPE	SIL	SUFFIX	ORIFICE	PORT CONNECTION	BODY INTERNAL	MANUAL OVERRIDE
99	P3012-R	SL	SO	5	2G	B5	※

SEAL	ACCESSORIES VALVE, PORT
S2G	A3

ORDERING EXAMPLE

VALVE + SOLENOID
1 : 20101-1.2-2G-S2+I-24V DC-37-H
2/2 Direct Acting Normally Closed, 1.2 mm Orifice, 1/4” BSP Connection, Aluminium Body Valve having Viton seats and size 14 Solenoid, Manual override not provided, with 24V DC flameproof junction box solenoid having 1/2” NPT cable entry, IP67, Ex d, IIC T4 Solenoid, insulation class H

SEAL KIT
2 : 98-20201-1.8-2G-S1
Set of Oring and plunger having EPDM seat and Seal for Valve type 20201-1.8-2G-S1

ROTEX
Engineering For The Future

IDENTIFICATION OF SOLENOID VALVE

SOLENOID





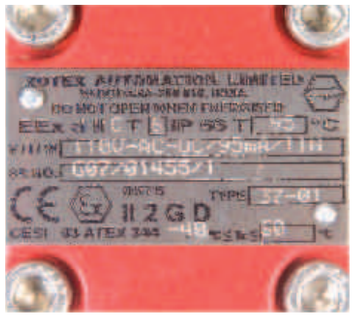

• Provide details from the label fixed on the Solenoid, The details can also be obtained by referring bottom of the solenoid

VALVE

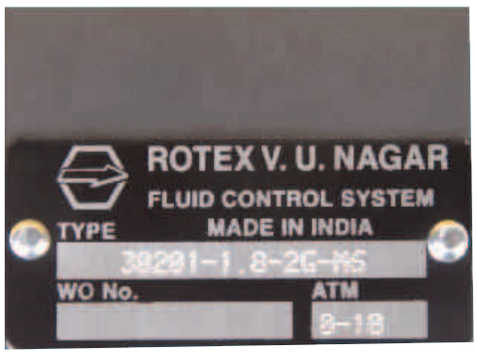

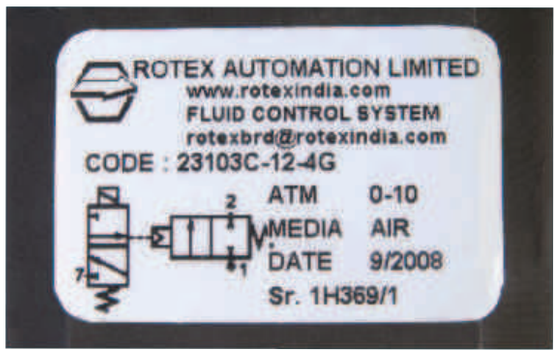

• Provide all details punched on the label fixed on the valve body
• Mention body material and details about port, manual override incase if ROTEX Solenoid Valve is manufactured earlier than 1997

PORT

Marking for Port connection →



MARKING	PORT CONNECTION
NIL	BSP
N	NPT
M	METRIC
C	BSP, NPT COMBINED

e.g. Valve body having NPT Port connections have N engraved above port

Specifications are subject to change without notice

FEATURES OF ROTEX SOLENOID VALVE

VALVE

- Highly reliable rugged construction
- Clear flow paths give highest kv/ Cv rating
- Non choking construction to suit harsh environment
- Pressure assisted Positive sealing helps to achieve Zero leak characteristics
- Unique Floating Seal design results in long life and trouble free operation
- Non sliding parts ensure consistent operation
- The Spring return mechanism ensures that the valve is suitable for vibrations up to 9g
- The valve can be mounted in any position
- Short travel results in quick response time and as a result allow rapid cycling up to 1200 cycles per minute
- Life in excess of 20 million cycles
- Sub-base versions available for most valves to facilitate faster maintenance and reduced down time
- Wide range to suit each application demand. Current range includes valves for vacuum, cryogenic application for high temperature application up to 250 °C

SOLENOID

- High efficiency solenoid construction requiring low power to operate
- Low temperature rise due to efficient use of energy which allows higher media/environment temperature
- Low Inrush, long life
- Low back surge due to low power consumption
- Solenoid is continuous duty rated
- Solenoid can be rotated full 360 degrees in most constructions to suit cable orientation
- The solenoid is tropicalized to suit the environment
- Noiseless operation due to excellent design and good manufacturing techniques
- IP67 by default make all the Solenoid variations suitable for outdoor installation
- Wide variation available to suit the application environment
- Wide termination area available for integral Junction box type constructions in both general purpose and Explosion proof applications
- Rotex uses solenoid with a maximum 11 Watt . Rotex uses a surge suppressor device in all solenoids above 10 Watt power consumption and in all Flameproof valves as a standard
- Rotex offers full interchangeability of solenoids from AC voltage to DC voltage or vice versa by changing only solenoid and without changing any other components

Specifications are subject to change without notice

ROTEX
Engineering For The Future

HOW TO USE CATALOGUE

How to use Catalogue :

A Solenoid Valve has to be selected on following basis

A Number of ports (2,3,4,5)

b Function (NC, NO, Universal, any other)

C Port Size

d Pressure

e Flow capacity

f Operation (Solenoid, air or manual)

The remaining selection largely depends on fluid, environment and power supply

The Catalogue has been designed in four sections detailing the design features and ordering options, Quick Reference Chart, Individual Valve group pages and Engineering information

In order to select a Valve, we recommend to use the Quick Reference chart (QRC) pages 31 to 70

The QRC provides the operating specification of an individual Valve ie Valve type, operating pressure, orifice and kv value, power consumption along with ordering variations like Port connection, body material, seals, manual override and solenoid enclosure. It also includes information and availability of special construction for Oxygen and/ or Copper free applications

For few Solenoid variations, the parameters like cable entry, weather protection etc. have to be specifically selected.

The final selection would help in completing the Valve ordering code. The ordering code provide detailed information on the Valve features, dimensions and other construction and connection details. Refer the corresponding page number listed in the chart. Ordering code of the Solenoid Valve is as per page 22 to 25

Example :

2 port, Normally Closed Solenoid Valve for 8 bar (g) operating pressure, 1/2" port connection AC power supply suitable for hazardous area

Starting with 2 port Normally Closed Valve Quick Reference Chart (Page-31) locate 1/2" port connection and maximum pressure, (8 bar) (page32) (also reproduced below). Select all such valves having maximum pressure rating equal to or greater than operating pressure (8 bar(g))

Depending upon required Flow Capacity, select the Valve type keeping minimum operating differential pressure requirement

QUICK REFERENCE CHART- 2/2 NORMALLY CLOSED SOLENOID VALVE

PORT CONNECTION			PRE-SSURE bar		ORIFICE (mm)	FLOW FACTOR kv (LPM OF WATER @ 1 bar ΔP)	VALVE TYPE	PILOT PRESSURE	BODY MATERIAL AND INTERNALS				SEALS					MANUAL OVERRIDE			SOLENOID ENCLOSURE							SUFFIX		POWER VA			PAGE NUMBER
																					WEATHER PROOF				EXPLOSION PROOF										
SIZE	BSP(F)	NPT(F)	MINIMUM	MAXIMUM					ALUMINIUM	ALUMINIUM + SS	BRASS (STD. PORT NPT)	SS 316/ CF8M (STD. PORT NPT)	NBR	Viton	EPDM	HYTREL	PTFE	NIL	STAYPUT CUM MOMENTARY	MOMENTARY	FLYING LEAD	PLUG IN, IP67	SQ. PLUG IN, IP67	TERMINAL BOX IP67	FPJB Ex d IIC, T4 OR T6, IP67	LARGE ENCLOSURE	SOLENOID SIZE	OXYGEN	AMMONIA	AC INRUSH	AC HOLDING	DC	
2/2 NORMALLY CLOSED SOLENOID VALVE																																
1/2"	4G	4R	0	6	3.5	5	20101		※		B2	B5	※	S2	S1		S8	※	M6	M8	F	22	25	T	E	III	14	✓	✓	18	12	8	73
			0	6	5	8	20126		※		B2	B5	※	S2	S1		S8	※	M6	M8	F		25	T	E		18	✓	✓	13	13	13	73
			0	8	3	4	20101		※		B2	B5	※	S2	S1		S8	※	M6	M8	F	22	25	T	E	III	14	✓	✓	18	12	8	73
			0	10	4	7	20126		※		B2	B5	※	S2	S1		S8	※	M6	M8	F		25	T	E		18	✓	✓	13	13	13	73
			0.5	10	12	60	24101		※			B12		S2	S1	※		※	M6	M8	F	22	25	T	E	III	14	✓	✓	18	12	8	85
			0.5	10	12	60	209H		※			B12		S2	S1	※		※				22					8	✓		6	12	5	77
			0.7	10	12	60	21101		※		B2	B12	※	S2	S1			M0	※	M8	F	22	25	T	E	III	14		✓	18	12	8	97
			0	12	2.5	3.5	20101		※		B2	B5	※	S2	S1		S8	※	M6	M8	F	22	25	T	E	III	14	✓	✓	18	12	8	73

Cable Entry	T	E
M20 x 1.5	19	39
1/2" NPT	16	37

	F
Flying lead IP54	※
Flying lead IP67	01

※ = Do not specify when opted for

✓= Options available

After deciding Valve type, continue horizontally on the corresponding line to select different ordering variation like

Port Connection

Body and Internal Material of Construction

Seal

Manual Override

Solenoid Enclosure

Suffix (Select if required)

HOW TO USE CATALOGUE

Depending on the type of solenoid enclosure selected, please select corresponding code from the table below the chart
(All fields in above variations marked with ※ are by default available and need not be specified in the ordering code)
Assuming that the following has been selected

	Selection	CODE
Valve type:	24101	24101
Orifice:	12 mm	12
Port Size:	1/2" NPT(F)	4R
Body:	CF8M	B12
Manual Override:	Stay put	M6 (Push and Turn) (page 422, 423)
Seals:	NBR	S0
Media:	AIR	0
Enclosure Size:	Required	III
Voltage :	110V 50Hz	110V 50Hz (page 23)
Solenoid Enclosure:	Hazardous, Ex proof, Ex d	
Cable entry:	1/2" NPT(F)	(E) 37
Insulation:	Class F	※ (page 23)
Special version:	Nil	※

The ordering code shall be
24101-12-4R-B12-M6+110V-50Hz-37-III
The group details can be found on page 85 to 90

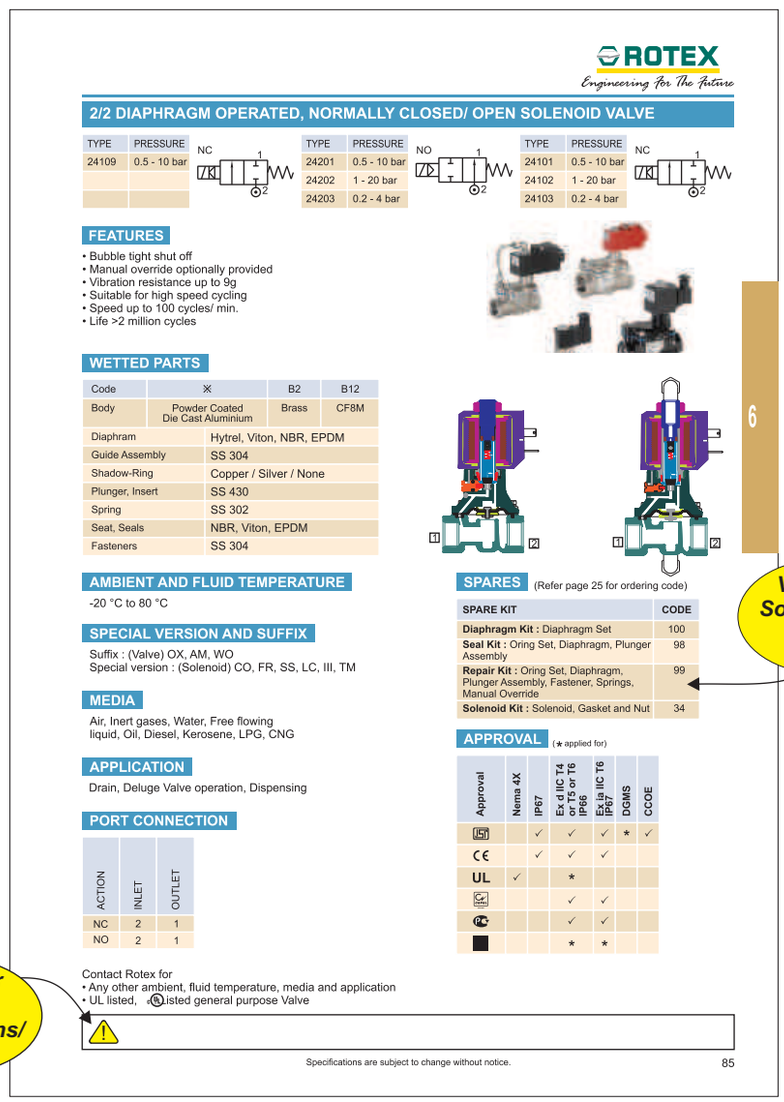

ROTEX
Engineering For The Future

2/2 DIAPHRAGM OPERATED, NORMALLY CLOSED/ OPEN SOLENOID VALVE

TYPE	PRESSURE
24109	0.5 - 10 bar

NC

TYPE	PRESSURE
24201	0.5 - 10 bar
24202	1 - 20 bar
24203	0.2 - 4 bar

NO

TYPE	PRESSURE
24101	0.5 - 10 bar
24102	1 - 20 bar
24103	0.2 - 4 bar

NC

FEATURES
- Bubble tight shut off
- Manual override optionally provided
- Vibration resistance up to 9g
- Suitable for high speed cycling
- Speed up to 100 cycles/ min.
- Life >2 million cycles

WETTED PARTS

Code	※	B2	B12
Body	Powder Coated Die Cast Aluminium	Brass	CF8M

Diaphram	Hytrel, Viton, NBR, EPDM
Guide Assembly	SS 304
Shadow-Ring	Copper / Silver / None
Plunger, Insert	SS 430
Spring	SS 302
Seat, Seals	NBR, Viton, EPDM
Fasteners	SS 304

AMBIENT AND FLUID TEMPERATURE
-20 °C to 80 °C

SPECIAL VERSION AND SUFFIX
Suffix : (Valve) OX, AM, WO
Special version : (Solenoid) CO, FR, SS, LC, III, TM

MEDIA
Air, Inert gases, Water, Free flowing liquid, Oil, Diesel, Kerosene, LPG, CNG

APPLICATION
Drain, Deluge Valve operation, Dispensing

PORT CONNECTION

ACTION	INLET	OUTLET
NC	2	1
NO	2	1

SPARES (Refer page 25 for ordering code)

SPARE KIT	CODE
Diaphragm Kit : Diaphragm Set	100
Seal Kit : Oring Set, Diaphragm, Plunger Assembly	98
Repair Kit : Oring Set, Diaphragm, Plunger Assembly, Fastener, Springs, Manual Override	99
Solenoid Kit : Solenoid, Gasket and Nut	34

APPROVAL (★ applied for)

Approval	Nema 4X	IP67	Ex d IIC T4 or T5 or T6 IP66	Ex ia IIC T6 IP67	DGMS	CCOE
JIS		✓	✓	✓	★	✓
CE		✓	✓	✓		
UL	✓		★			
			✓	✓		
			✓	✓		
			★	★		

Contact Rotex for
- Any other ambient, fluid temperature, media and application
- UL listed, Listed general purpose Valve

Specifications are subject to change without notice. 85

6

Valve and Solenoid can have options

Look for special instructions/ notes.

4

Specifications are subject to change without notice

HOW TO USE CATALOGUE

ROTEX
Engineering For The Future

2/2 DIAPHRAGM OPERATED, NORMALLY CLOSED/ OPEN SOLENOID VALVE

ORDERING CODE **VALVE + SOLENOID**

TYPE – SUFFIX – ORIFICE – PORT CONNECTION – BODY AND INTERNALS – MANUAL OVERRIDE – SEAL
SIZE – VOLTAGE – CURRENT – SOLENOID ENCLOSURE – APPROVAL – INSULATION – SPECIAL VERSION
e.g. 24101-12-4G+220V 50Hz-22; 24102-25-B12-M6-S2+220V 50Hz-16

DIMENSIONS All Dimensions are in mm

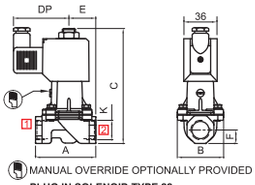

MANUAL OVERRIDE OPTIONALLY PROVIDED
PLUG IN SOLENOID TYPE 22

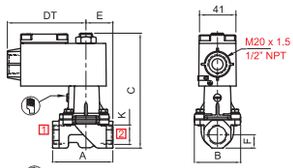

MANUAL OVERRIDE OPTIONALLY PROVIDED
TERMINAL BOX/ Ex d LARGE ENCLOSURE, TYPE 16, 19, 37, 39, LC

NW	K (PORT SIZE)	A	B	C	D P	D P	E	F	CONST. REF.
VALVE TYPE : 24101, 24102, 24103									
12	1/2", 3/8", 1/4"	65	50	124	60	85	29	15	29
20	3/4"	84	64	134	60	85	42	17	30
25	1"	110	93	148	60	85	51	25	31
50	2"	165	170	186	60	85	76	38	32

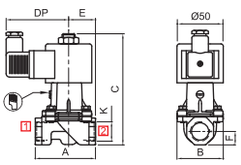

MANUAL OVERRIDE OPTIONALLY PROVIDED
SQUARE PLUG IN SOLENOID TYPE 25

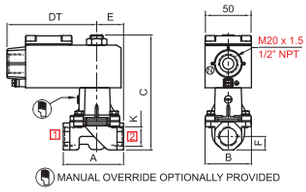

MANUAL OVERRIDE OPTIONALLY PROVIDED
TERMINAL BOX/ Ex d LARGE ENCLOSURE, TYPE 16, 19, 37, 39, LC

NW	K (PORT SIZE)	A	B	C	D P	D T	E	F	CONST. REF.
VALVE TYPE : 24101, 24102, 24103									
12	1/2", 3/8", 1/4"	65	50	124	66	97	29	15	29
20	3/4"	84	64	134	66	97	42	17	30
25	1"	110	93	148	66	97	51	25	31
50	2"	165	170	186	66	97	76	38	32

Specifications are subject to change without notice. 87

6

ENGINEERING SECTION

Please refer page 391 to 435 for working principle, Identification, PED, Explosion Proof, ATEX, Fluid compatibility, Flow charts and selection criteria for orifice, Manual override, Body material and internals, seal and Solenoid enclosure

4

2 PORT VALVE

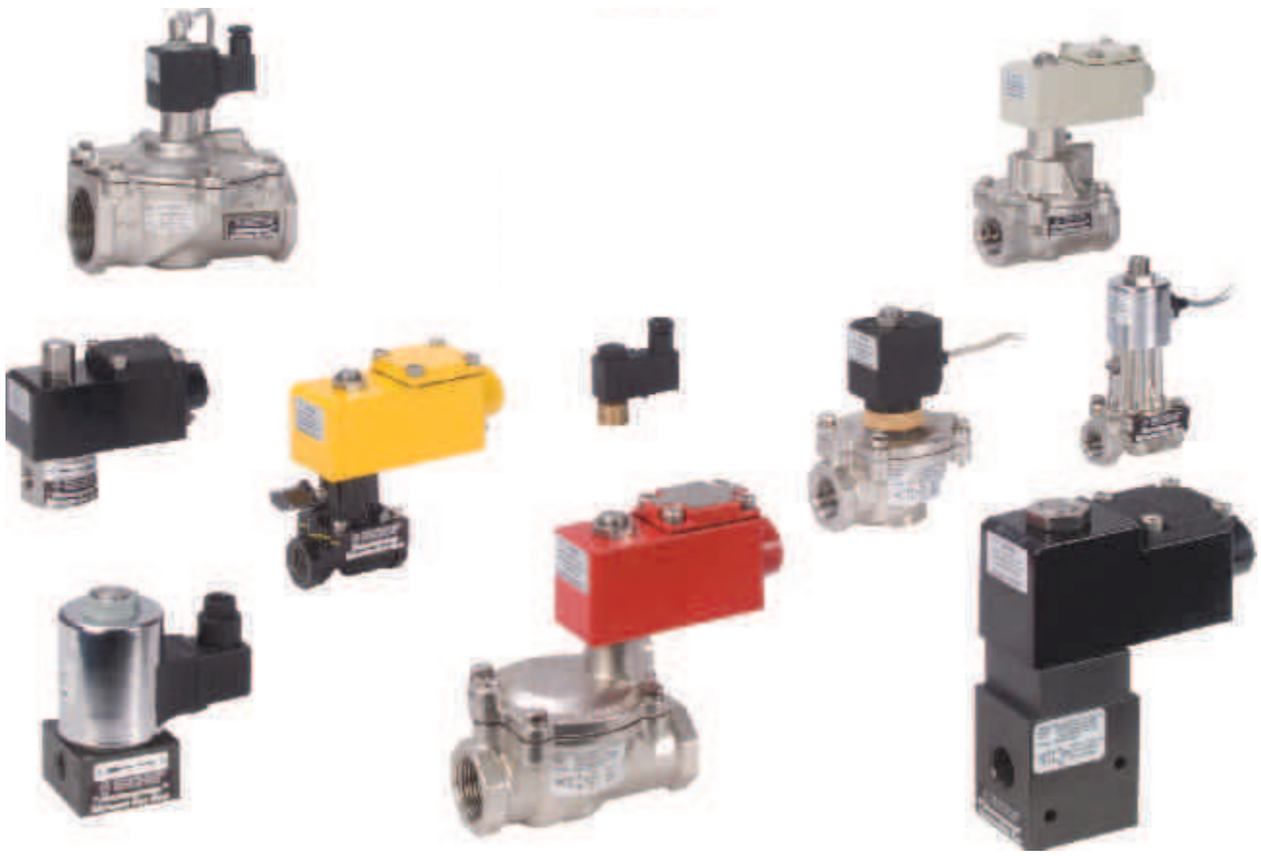

TYPE	ORIFICE mm	PRESSURE bar	PAGE NO.	ORIFICE mm	PRESSURE bar	PAGE NO.
	NORMALLY CLOSED VALVE			NORMALLY OPEN VALVE		
Direct Acting	0.8 - 12	0 - 100	73	0 - 5	0 - 63	79
Direct Acting General Purpose	1.5 - 2.5	0 - 14	77			
Direct Acting (All Ports in Body)	1.2 - 3	0 - 20	83	1.2 - 3	0 - 20	83
Diaphragm Actuated	12 To 50	0.2 - 20	85	12 To 50	0.2 - 21	85
Direct Acting High Orifice	12 To 50	0 - 10	91			
Diaphragm Actuated (General Purpose)	12 To 50	0.2 - 20	93			
Diaphragm Actuated (L Ports)	12 To 50	0.2 - 20	95			
Poppet Actuated	12 To 50	0.5 - 40	97	12 To 50	0.5 - 40	97
Isolated Piston	12 To 50	0 - 20	101	12 To 50	0 - 20	101
Isolated Piston Bi Directional	12 To 50	0 - 10	103	12 To 50	0 - 10	103
Air Operated Air Fail To Open				12 To 50	0 - 40	105
Isolated Piston Air Operated	12 To 50	0 - 40	107	12 To 50	0 - 40	107
Direct Acting High Pressure	1.2 To 1.4	0 - 400	109			
Poppet Actuated High Pressure	12 To 50	4 - 70	111	12 To 50	4 - 70	111
Poppet Actuated High Pressure	12 To 25	5 - 400	113			

2/2 SOLENOID VALVE

SOLENOID INTERCHANGEABILITY

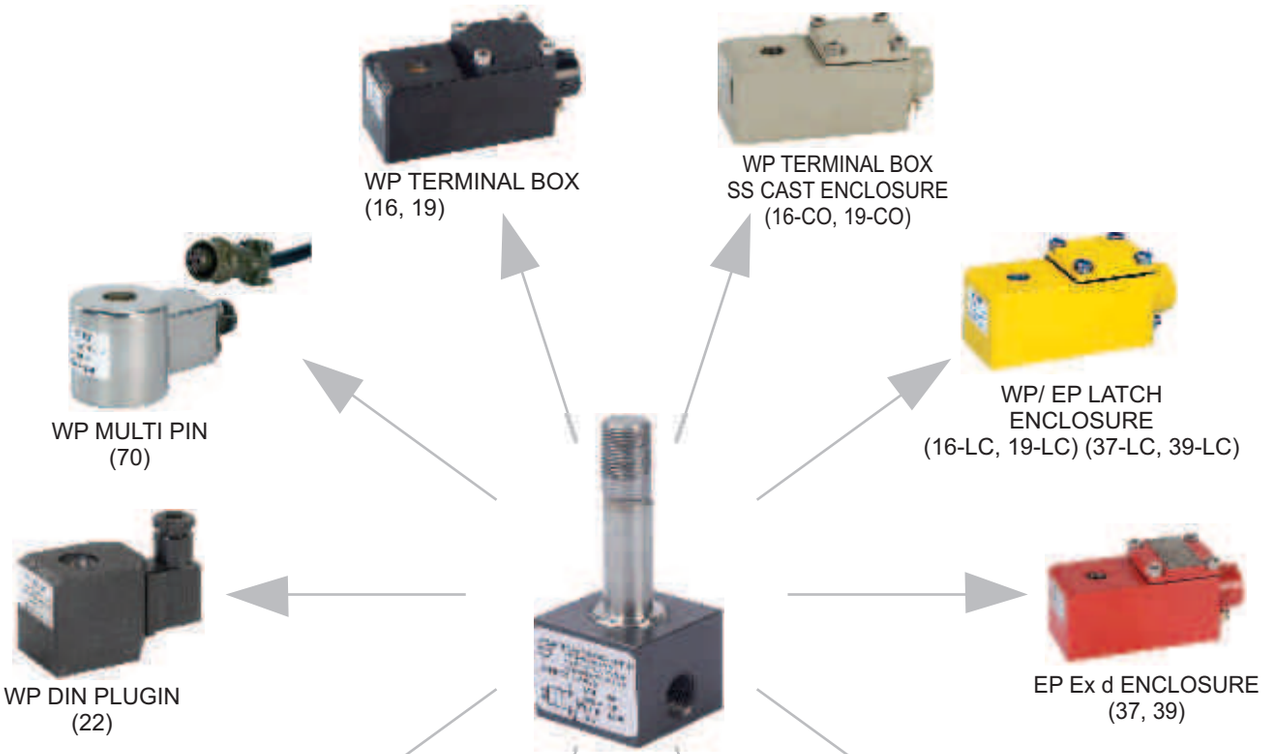

WP : WEATHER PROOF
EP : EXPLOSION PROOF

ROTEX TWO PORT VALVE PROVIDES INTERCHANGEABILITY FOR VARIOUS SOLENOID ENCLOSURES, VOLTAGE AND CURRENT WITHOUT AFFECTING ITS PERFORMANCE.

2/2 DIRECT ACTING NORMALLY CLOSED SOLENOID VALVE

TYPE	PRESSURE

TYPE	PRESSURE
3352V01	0 - 100 bar
20126V01	0 - 225 bar

NC

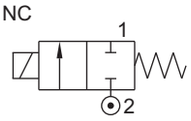

TYPE	PRESSURE
20101	0-150 bar
20126	0-63 bar

NC

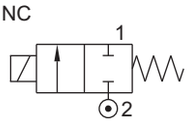

FEATURES

- Bubble tight shut off
- Suitable for vacuum up to 10^{-6} torr
- Vibration resistance up to 9g
- Mounts in any position
- Suitable for high speed cycling up to 1000 cycles/ min.
- Life >10 million cycles
- Manual override optionally provided



WETTED PARTS

Code	※	B2	B5
Body	Anodized Aluminium	Brass	SS 316
Internals	Aluminium	Brass	SS 316
Guide Assembly	SS 304		
Shadow-Ring	Copper/ Silver/ None		
Plunger, Insert	SS 430		
Spring	SS 302		
Seat, Seals	NBR, Viton, EPDM, PTFE		

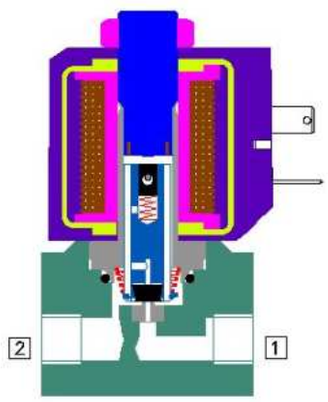

※ Do not specify code if opted for. Refer Page # 22 for Value of ※

AMBIENT AND FLUID TEMPERATURE

-30 °C to 75 °C

SPECIAL VERSION AND SUFFIX

Suffix : (Valve) OX, AM
Special version : (Solenoid) CO, FR, SS, LC, III, TM

MEDIA

Air, Inert Gases, Water, Vacuum, Free Flowing Liquid, Oil, Diesel, Kerosene, LPG, Furnace Oil

APPLICATION

Dispensing, Analyzer, Drain

PORT CONNECTION

INLET	OUTLET
2	1

SPARES

(Refer page 25 for ordering code)

SPARE KIT	CODE
Seal Kit : Oring Set and Plunger Assembly	98
Repair Kit : Oring Set, Plunger Assembly, Springs, Manual Override, Guide assembly	99
Solenoid Kit : Solenoid, Gasket	34

APPROVAL

(* applied for)

Approval	Nema 4X	IP67	Ex d IIC T4 or T5 or T6 IP66	Ex ia IIC T6 IP67	DGMS	CCOE
		✓	✓	✓	✓	✓
CE		✓	✓	✓		
UL	✓		*			
CEPEL			✓	✓		
EAC			✓	✓		
			✓	✓		

Contact Rotex for
- Any other ambient, fluid temperature, media and application
- UL listed, c(UL)us Listed general purpose Valve

20123 & 20124 Model is discontinued Offer Alterenate Model 20172V02LP
Contact Rotex if must to Offer Specific Model
OIL Media Temperature Restricted from 0 °C to 100 °C

ROTEX
Engineering For The Future

2/2 DIRECT ACTING NORMALLY CLOSED SOLENOID VALVE

SPECIFICATION

PORT CONNECTION			PRE-SSURE bar							BODY MATERIAL AND INTERNALS				SEALS					MANUAL OVERRIDE			SOLENOID ENCLOSURE							SUFFIX		POWER VA			CONSTRUCTION REFERENCE NUMBER
																						WEATHER PROOF				EXPLOSION PROOF										
SIZE	BSP(F)	NPT(F)	MINIMUM	MAXIMUM	NW ORIFICE (mm)	FLOW FACTOR kv (LPM OF WATER @ 1 bar ΔP)	VALVE TYPE	PILOT PRESSURE	ALUMINIUM	ALUMINIUM + SS	BRASS (STD. PORT NPT)	SS316 (STD. PORT NPT)	NBR	Viton	EPDM	HYTREL	PTFE	NIL	STAYPUT CUM MOMENTARY	MOMENTARY	FLYING LEAD	PLUG IN, IP67	SQ. PLUG IN, IP67	TERMINAL BOX IP67	EXPLOSION PROOF IIC, IP67	LARGE ENCLOSURE	SOLENOID SIZE	OXYGEN	AMONIA	AC INRUSH	AC HOLDING	DC	
2/2 NORMALLY CLOSED																																	
1/2"	4G	4R	0	2.5	5	8	20101		※		B2	B5	※	S2	S1		S8	※			F	22	25	T	E	III	14	✓	✓	18	12	8	A
			0	4	4	7	20101		※		B2	B5	※	S2	S1		S8	※	M6	M8	F	22	25	T	E	III	14	✓	✓	18	12	8	A
			0	6	3.5	5	20101		※		B2	B5	※	S2	S1		S8	※	M6	M8	F	22	25	T	E	III	14	✓	✓	18	12	8	A
			0	6	5	8	20126		※		B2	B5	※	S2	S1		S8	※	M6	M8	F		25	T	E		18	✓	✓	13	13	13	C
			0	8	3	4	20101		※		B2	B5	※	S2	S1		S8	※	M6	M8	F	22	25	T	E	III	14	✓	✓	18	12	8	A
			0	10	4	7	20126		※		B2	B5	※	S2	S1		S8	※	M6	M8	F		25	T	E		18	✓	✓	13	13	13	C
3/8"	3G	3R	0	12	2.5	3.5	20101		※		B2	B5	※	S2	S1		S8	※	M6	M8	F	22	25	T	E	III	14	✓	✓	18	12	8	A
			0	15	2.2	2.5	20101		※		B2	B5	※	S2	S1		S8	※	M6	M8	F	22	25	T	E	III	14	✓	✓	18	12	8	A
			0	15	3.5	5	20126		※		B2	B5	※	S2	S1		S8	※	M6	M8	F		25	T	E		18	✓	✓	13	13	13	C
1/4"	2G	2R	0	20	1.8	1.8	20101		※		B2	B5	※	S2	S1		S8	※	M6	M8	F	22	25	T	E	III	14	✓	✓	18	12	8	A
			0	25	1.6	1.4	20101		※		B2	B5	※	S2	S1		S8	※	M12	M5	F	22	25	T	E	III	14	✓	✓	18	12	8	A
			0	25	3	4	20126		※		B2	B5	※	S2	S1		S8	※	M6	M8	F		25	T	E		18	✓	✓	13	13	13	C
1/8"	1G	1R	0	32	2.5	3.5	20126		※		B2	B5	※	S2	S1		S8	※	M12	M5	F		25	T	E		18	✓	✓	13	13	13	C
			0	40	2.2	2.5	20126		※		B2	B5	※	S2	S1		S8	※	M12	M5	F		25	T	E		18	✓	✓	13	13	13	C
			0	50	1.8	1.8	20126		※		B2	B5	※	S2	S1		S8	※	M11	M4	F		25	T	E		18	✓	✓	13	13	13	C
			0	60	1.2	0.7	20101		※		B2	B5					S8	※	M11	M4	F	22	25	T	E	III	14	✓	✓	18	12	8	A
			0	63	1.6	1.4	20126		※		B2	B5					S8	※	M11	M4	F		25	T	E		18	✓	✓	13	13	13	C
		①	0	100	1.2	0.7	20126V01		※		B2	B5					S8	※	M11	M4	F		25	T	E		18	✓	✓	13	13	13	C
			0	150	0.8	0.5	20101		※		B2	B5					S8	※	M11	M4	F	22	25	T	E	III	14	✓	✓	18	12	8	A
			0	225	0.8	0.5	20126V01				B2	B5					S8	※	M11	M4	F		25	T	E		18	✓	✓	13	13	13	C
			0	4	6	12	20126		※		B2	B5	※	S2	S1		S8	※	M6	M8	F		25	T	E		18	✓	✓	13	13	13	D
		②	0	100	1.2	0.7	3352V01				B2	B5					S4	※					25	T	E		18	✓	✓	13	13	13	C

| SOLENOID 14 | | | | | | | | | | | | | | | | | | |

2/2 DIRECT ACTING NORMALLY CLOSED SOLENOID VALVE

ORDERING CODE AND EXAMPLE VALVE + SOLENOID

VALVE TYPE – SIL – SUFFIX – ORIFICE – PORT CONNECTION – BODY AND INTERNALS – MANUAL OVERRIDE – SEAL – MEDIA + SIZE – VOLTAGE – CURRENT – SOLENOID ENCLOSURE – SPECIAL VERSION – POWER – INSULATION – APPROVAL – SIL – ACCESSORIES SOLENOID

eg.: 20126-4-2G+II-230V-50Hz-25-RC; 20101-2.2-2R-B5-M6-S2+III-24V DC-37-CO-H-01

DIMENSIONS

All Dimensions are in mm

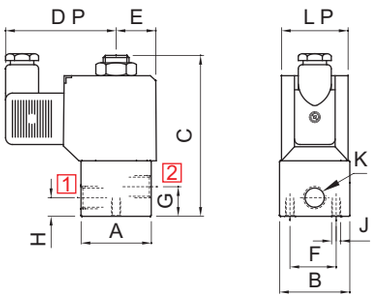

PLUG IN SOLENOID TYPE 22

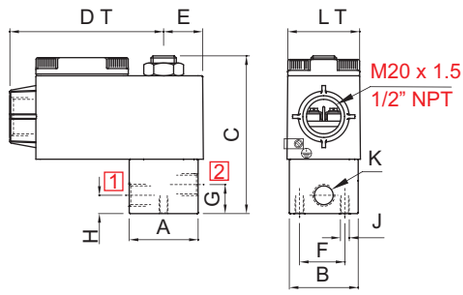

TERMINAL BOX/ Ex d TYPE 16, 19, 37, 39, 58, 58LT

K (PORT SIZE)	A	B	C	D P	D T	E	F	G	H	J	L P	L T	BODY MATL.	CONST. REF.
VALVE TYPE : 20101														
1/8", 1/4"	38	38	87	60	85	22	25	16	10	M6	36	40	AL, BR	1
3/8", 1/2"	60	38	95	60	85	22	25	20.5	20.5	M6	36	40	AL, BR	2
1/8", 1/4"	44	Ø48	91	60	85	22	25	17	10.5	M6	36	40	SS	3
3/8", 1/2"	58	Ø62	111	60	60	22	25	14	14	M6	36	40	SS	4

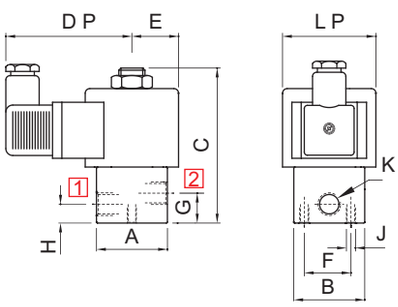

PLUG IN SOLENOID TYPE 25

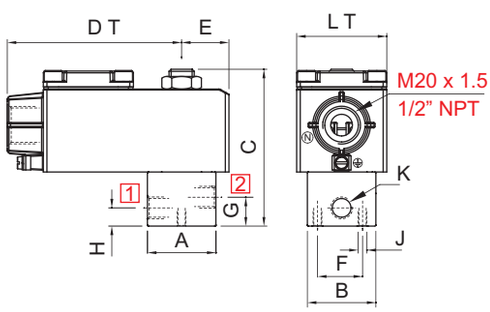

TERMINAL BOX/ Ex d LARGE ENCLOSURE TYPE 16, 19, 37, 39, 58, 58LT, LC

K (PORT SIZE)	A	B	C	PD	D TE	F	G	H	J	L P	L T	BODY MATL.	CONST. REF.
VALVE TYPE : 20101													
1/8", 1/4"	38	38	87	66	97	26	25	16	10	M6	Ø50	50	AL, BR	5
3/8", 1/2"	60	38	95	66	97	26	25	20.5	20.5	M6	Ø50	50	AL, BR	6
1/8", 1/4"	44	Ø48	91	66	97	26	25	17	10.5	M6	Ø50	50	SS	7
3/8", 1/2"	58	Ø62	111	68	103	28	25	14	14	M6	Ø50	50	SS	8
VALVE TYPE : 20126														
1/8", 1/4"	50	50	102	68	103	28	25	17	10.5	M6	Ø50	50	AL, BR	9
3/8", 1/2"	65	50	108	68	103	28	25	14	14	M6	Ø50	50	AL, BR	10
1/8"	44	Ø48	91	66	103	28	25	17	10.5	M6	Ø50	50	SS	13
3/8"	58	Ø62	111	68	103	29	25	14	14	M6	Ø50	50	SS	14

2/2 DIRECT ACTING NORMALLY CLOSED SOLENOID VALVE

DIMENSIONS

All Dimensions are in mm

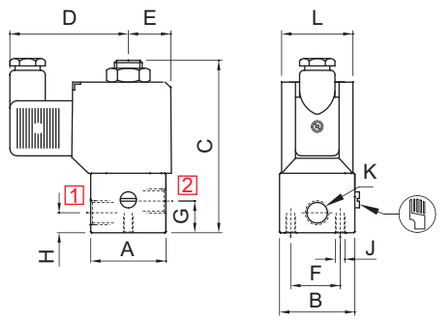

MANUAL OVERRIDE OPTIONALLY PROVIDED

PLUG IN SOLENOID TYPE 22

K (PORT SIZE)	A	B	C	D	E	F	G	H	J	L	BODY MATL.	CONST. REF.
VALVE TYPE : 20101 WITH MO												
1/8", 1/4"	38	38	87	60	22	25	16	10	M6	36	AL, BR	1
3/8", 1/2"	60	38	95	60	22	25	20.5	20.5	M6	36	AL, BR	2
1/8", 1/4"	44	Ø48	91	60	22	25	17	10.5	M6	36	SS	3
3/8", 1/2"	58	Ø62	111	60	22	25	14	14	M6	36	SS	4

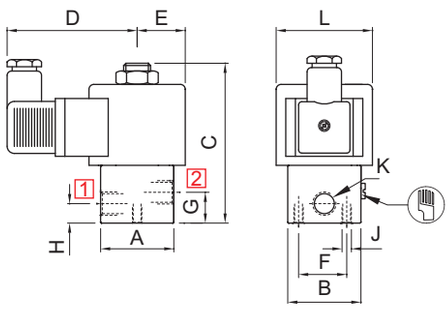

MANUAL OVERRIDE OPTIONALLY PROVIDED

SQUARE PLUG IN SOLENOID TYPE 25

K (PORT SIZE)	A	B	C	D	E	F	G	H	J	L	BODY MATL.	CONST. REF.
VALVE TYPE : 20101 WITH MO												
1/8", 1/4"	38	38	87	66	25	25	16	10	M6	Ø50	AL, BR	5
3/8", 1/2"	60	38	95	66	25	25	20.5	20.5	M6	Ø50	AL, BR	6
1/8", 1/4"	44	Ø48	91	66	25	25	17	10.5	M6	Ø50	SS	7
3/8", 1/2"	58	Ø62	111	68	22	25	14	14	M6	Ø50	SS	8
VALVE TYPE : 20126 WITH MO												
1/8", 1/4"	50	50	104	68	25	25	17	10.5	M6	Ø50	AL, BR	9
3/8", 1/2"	65	50	104	68	25	25	14	14	M6	Ø50	AL, BR	10
1/4"	44	Ø48	91	66	25	25	17	10.5	M6	Ø50	SS	13
1/2"	58	Ø62	111	68	29	25	14	14	M6	Ø50	SS	14

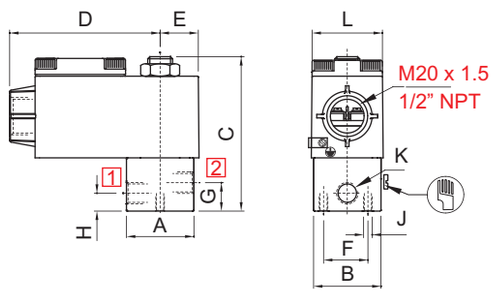

MANUAL OVERRIDE OPTIONALLY PROVIDED

TERMINAL BOX/ Ex d ENCLOSURE, TYPE 16, 19, 37, 39, 58, 58LT

K (PORT SIZE)	A	B	C	D	E	F	G	H	J	L	BODY MATL.	CONST. REF.
VALVE TYPE : 20101 WITH MO												
1/8", 1/4"	38	38	87	85	22	25	16	10	M6	39	AL, BR	1
3/8", 1/2"	60	38	95	85	22	25	20.5	20.5	M6	39	AL, BR	2
1/8", 1/4"	44	Ø48	91	85	22	25	17	10.5	M6	39	SS	3
3/8", 1/2"	58	Ø62	111	60	22	25	14	14	M6	39	SS	4

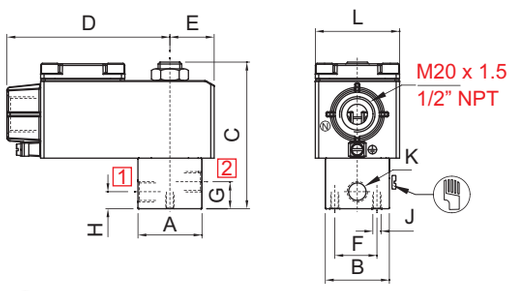

MANUAL OVERRIDE OPTIONALLY PROVIDED

TERMINAL BOX/ Ex d LARGE ENCLOSURE, TYPE 16, 19, 37, 39, 58, 58LT, LC

K (PORT SIZE)	A	B	C	D	E	F	G	H	J	L	BODY MATL.	CONST. REF.
VALVE TYPE : 20101 WITH MO												
1/8", 1/4"	38	38	87	97	26	25	16	10	M6	50	AL, BR	5
3/8", 1/2"	60	38	95	97	26	25	20.5	20.5	M6	50	AL, BR	6
1/8", 1/4"	44	Ø48	91	97	26	25	17	10.5	M6	36	SS	7
3/8", 1/2"	58	Ø62	111	103	28	25	14	14	M6	50	SS	8
VALVE TYPE : 20126 WITH MO												
1/8", 1/4"	50	50	102	103	28	25	17	10.5	M6	50	AL, BR	9
3/8", 1/2"	65	50	102	103	28	25	14	14	M6	50	AL, BR	10
1/4"	44	Ø48	91	103	28	25	17	10.5	M6	50	SS	13
1/2"	58	Ø62	111	103	29	25	14	14	M6	50	SS	14

Specifications are subject to change without notice

2/2 DIRECT ACTING NORMALLY CLOSED SOLENOID VALVE

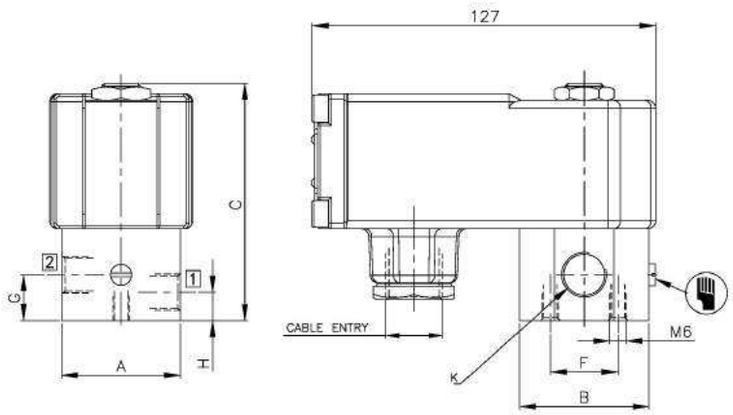

BCE SOLENOID/ Ex d TYPE 87

K (PORT SIZE)	A	B	C	F	G	H	BODY MATL.	CONST. REF.
VALVE TYPE : 20101								
1/8", 1/4"	38	38	87	25	10.5	16	AL, BR	1
3/8", 1/2"	60	38	94	25	20.5	20.5	AL, BR	2
1/8", 1/4"	44	Ø48	87	25	10.5	17	SS	3
3/8", 1/2"	58	Ø62	93	25	14	14	SS	4

2/2 DIRECT NORMALLY OPEN SOLENOID VALVE

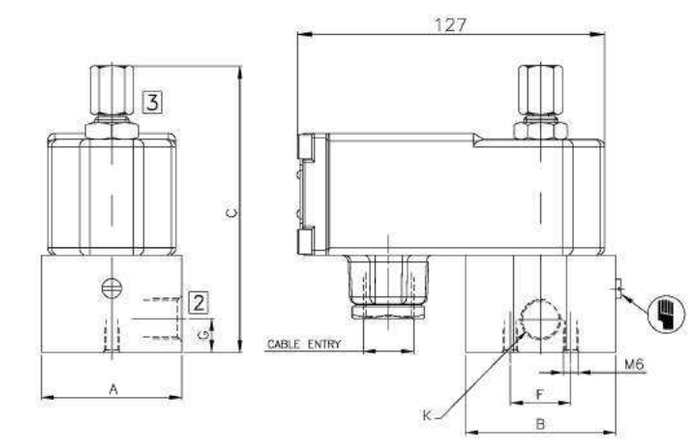

BCE SOLENOID/ Ex d TYPE 87

K (PORT SIZE)	A	B	C	F	G	BODY MATL.	CONST. REF.
VALVE TYPE : 20201							
1/8", 1/4"	38	38	105	25	16	AL, BR	1
3/8", 1/2"	60	38	115	25	20.5	AL, BR	2
1/8", 1/4"	44	Ø48	105	25	17	SS	3
3/8", 1/2"	58	Ø62	115	25	14	SS	4

2/2 DIRECT ACTING NORMALLY CLOSED SOLENOID VALVE

TYPE	PRESSURE
211A	0 - 14 bar
211B	0 - 8 bar
211C	0 - 5 bar

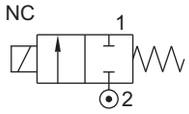

TYPE	PRESSURE
202A	0 - 14 bar
202B	0 - 8 bar
202C	0 - 5 bar

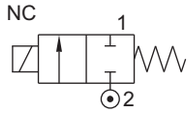

TYPE	PRESSURE
201A	0 - 14 bar
201B	0 - 8 bar
201C	0 - 5 bar

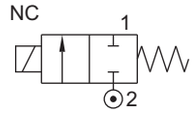



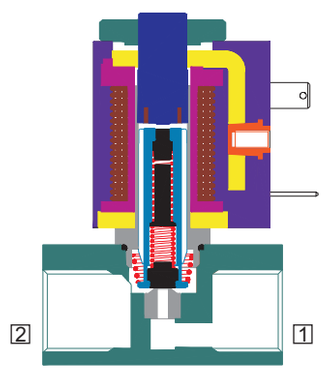

6

THIS MODEL IS DISCONTINUED.
OFFER ALTERNATE MODEL 20101.
CONTACT ROTEX IF MUST TO OFFER SPECIFIC

2/2 DIRECT ACTING NORMALLY OPEN SOLENOID VALVE

TYPE	PRESSURE

TYPE	PRESSURE

TYPE	PRESSURE
20201	0 - 20 bar
20202	0 - 63 bar

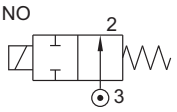

FEATURES

- Bubble tight shut off
- Manual override optionally provided
- Suitable for vacuum up to 10^{-6} torr
- Vibration resistance up to 9g
- Suitable for high speed cycling
- Speed up to 1000 cycles/ min
- Life >10 million cycles



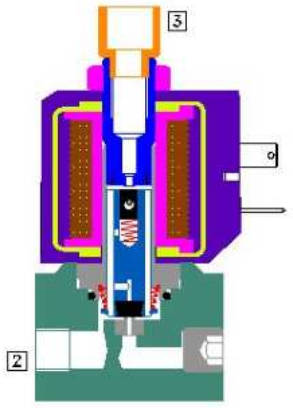

WETTED PARTS

Code	※	B2	B5
Body	Anodized Aluminium	Brass	SS 316
Internals	Aluminium	Brass	SS 316
Guide Assembly	SS 304		
Shadow-Ring	Copper/ Silver/ None		
Plunger, Insert	SS 430		
Spring	SS 302		
Seat, Seals	NBR, Viton, EPDM, PTFE		

AMBIENT AND FLUID TEMPERATURE

-30 °C to 75 °C

SPECIAL VERSION AND SUFFIX

Suffix : (Valve) OX, AM
Special version : (Solenoid) CO, FR, SS, LC, III, TM

MEDIA

Air, Inert Gases, Water, Vacuum, Free Flowing
Liquid, Oil, Diesel, Kerosene, LPG, Furnace Oil

APPLICATION

Drain and Dispensing

PORT CONNECTION

INLET	OUTLET
3	2

SPARES

(Refer page 25 for ordering code)

SPARE KIT	CODE
Seal Kit : Oring Set and Plunger Assembly	98
Repair Kit : Oring Set, Plunger Assembly, Springs, Manual Override,Guide Assembly	99
Solenoid Kit : Solenoid, Gasket	34

APPROVAL

(* applied for)

Approval	Nema 4X	IP67	Ex d IIC T4 or T5 or T6 IP66	Ex ia IIC T6 IP67	DGMS	CCOE
ISI		✓	✓	✓	✓	✓
CE		✓	✓	✓		
UL	✓		*			
CCPEL			✓	✓		
PESO			✓	✓		
IECEx			✓	✓		

Contact Rotex for
• Any other ambient, fluid temperature, media and application
• UL listed, cUL Listed general purpose Valve

⚠ OIL Media Temperature Restricted from 0 °C to 100 °C

Specifications are subject to change without notice

ROTEX
Engineering For The Future

2/2 DIRECT ACTING NORMALLY OPEN SOLENOID VALVE

SPECIFICATION

PORT CONNECTION			PRE-SSURE bar		ORIFICE (mm)	FLOW FACTOR kv (LPM OF WATER @ 1 bar ΔP)	VALVE TYPE	PILOT PRESSURE	BODY MATERIAL AND INTERNALS				SEALS					MANUAL OVERRIDE			SOLENOID ENCLOSURE							SUFFIX		POWER VA			CONSTRUCTION REFERENCE NUMBER
																					WEATHER PROOF				EXPLOSION PROOF									
SIZE/ 2	BSP(G)	NPT(R)	MINIMUM	MAXIMUM					ALUMINIUM	ALUMINIUM + SS	BRASS (STD. PORT NPT)	SS 316 (STD. PORT NPT)	NBR	Viton	EPDM	HYTREL	PTFE	NIL	STAYPUT CUM MOMENTARY	MOMENTARY	FLYING LEAD	PLUG IN, IP67	SQ. PLUG IN, IP67	TERMINAL BOX IP67	EXPLOSION PROOF IIC, IP67	LARGE ENCLOSURE	SOLENOID SIZE	OXYGEN	AMONIA	AC INRUSH	AC HOLDING	DC	
2/2 NORMALLY OPEN																																
3 / 8	3 G	3 R	0	3	5	8	20202		※		B2	B5	※	S2	S1		S8	※	M6	M8	F		25	T	E		18	✓	✓	13	13	13	K
			0	4	3	4	20201		※		B2	B5	※	S2	S1		S8	※	M6	M8	F	22	25	T	E	III	14	✓	✓	18	12	8	J
			0	6	2.5	3.5	20201		※		B2	B5	※	S2	S1		S8	※	M6	M8	F	22	25	T	E	III	14	✓	✓	18	12	8	J
			0	6	4	7	20202		※		B2	B5	※	S2	S1		S8	※	M6	M8	F		25	T	E		18	✓	✓	13	13	13	K
			0	8	2.2	2.5	20201		※		B2	B5	※	S2	S1		S8	※	M6	M8	F	22	25	T	E	III	14	✓	✓	18	12	8	J
			0	8	3.5	5	20202		※		B2	B5	※	S2	S1		S8	※	M6	M8	F		25	T	E		18	✓	✓	13	13	13	K
1 / 4	2 G	2 R	0	10	1.8	1.8	20201		※		B2	B5	※	S2	S1		S8	※	M6	M8	F	22	25	T	E	III	14	✓	✓	18	12	8	J
			0	12	3	4	20202		※		B2	B5	※	S2	S1		S8	※	M6	M8	F		25	T	E		18	✓	✓	13	13	13	K
			0	15	1.6	1.4	20201		※		B2	B5	※	S2	S1		S8	※	M6	M8	F	22	25	T	E	III	14	✓	✓	18	12	8	J
			0	15	2.5	3.5	20202		※		B2	B5	※	S2	S1		S8	※	M6	M8	F		25	T	E		18	✓	✓	13	13	13	K
			0	20	1.2	0.7	20201		※		B2	B5	※	S2	S1		S8	※	M6	M8	F	22	25	T	E	III	14	✓	✓	18	12	8	J
			0	25	2.2	2.5	20202		※		B2	B5	※	S2	S1		S8	※	M6	M8	F		25	T	E		18	✓	✓	13	13	13	K
1 / 8	1 G	1 R	0	32	1.8	1.8	20202		※		B2	B5	※	S2	S1		S8	※	M12	M5	F		25	T	E		18	✓	✓	13	13	13	K
			0	40	1.6	1.4	20202		※		B2	B5	※	S2	S1		S8	※	M12	M5	F		25	T	E		18	✓	✓	13	13	13	K
			0	63	1.2	0.7	20202		※		B2	B5					S8	※	M11	M4	F		25	T	E		18	✓	✓	13	13	13	K

| SOLENOID 14 | | | | | | | | | | | | | | | | | | |

2/2 DIRECT ACTING NORMALLY OPEN SOLENOID VALVE

DIMENSIONS

All Dimensions are in mm

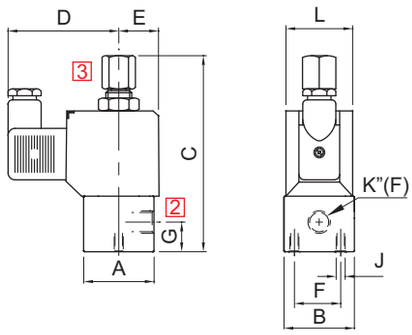

PLUG IN SOLENOID TYPE 22

K (PORT SIZE)	A	B	C	D	E	F	G	J	L	BODY MATL.	CONST. REF.
VALVE TYPE : 20201											
1/8”	38	38	103	60	22	25	16	M6	36	AL, BR	16
3/8”, 1/2”	60	38	115	60	22	25	20.5	M6	36	AL, BR	17
1/8”, 1/4”	44	Ø48	111	60	22	25	17	M6	36	SS	18
3/8”, 1/2”	58	Ø62	131	60	22	25	14	M6	36	SS	19

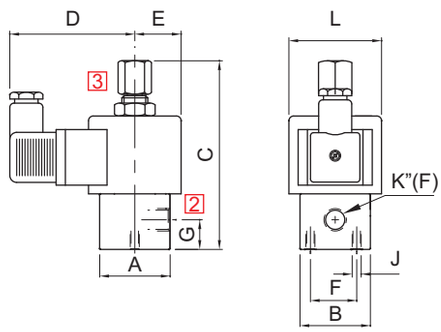

SQUARE PLUG IN SOLENOID TYPE 25

K (PORT SIZE)	A	B	C	D	E	F	G	J	L	BODY MATL.	CONST. REF.
VALVE TYPE : 20201											
1/8”, 1/4”	38	38	103	66	25	25	16	M6	Ø50	AL, BR	20
1/8”, 1/4”	60	38	115	66	25	25	20.5	M6	Ø50	AL, BR	21
1/8”, 1/4”	44	Ø48	111	66	25	25	17	M6	Ø50	SS	22
1/2”	58	Ø62	131	68	29	25	14	M6	Ø50	SS	26
VALVE TYPE : 20201											
1/8”, 1/4”	50	50	124	68	25	25	17	M6	Ø50	AL, BR	23
1/8”, 1/4”	65	50	124	68	25	25	14	M6	Ø50	AL, BR	24
3/8”, 1/2”	58	Ø62	131	68	29	25	14	M6	Ø50	SS	25
1/4”	44	Ø48	111	68	25	25	17	M6	Ø50	SS	27

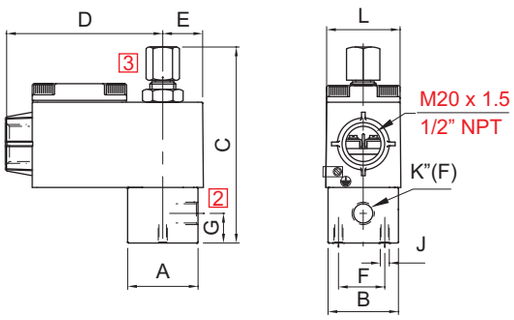

TERMINAL BOX/ Ex d ENCLOSURE, TYPE 16, 19, 37, 39, 58, 58LT

K (PORT SIZE)	A	B	C	D	E	F	G	J	L	BODY MATL.	CONST. REF.
VALVE TYPE : 20201											
1/8”, 1/4”	38	38	103	85	22	25	16	M6	36	AL, BR	16
1/8”, 1/4”	60	38	115	85	22	25	20.5	M6	36	AL, BR	17
1/8”, 1/4”	44	Ø48	111	85	22	25	17	M6	36	SS	18
1/8”, 1/4”	58	Ø62	131	85	22	25	14	M6	36	SS	19

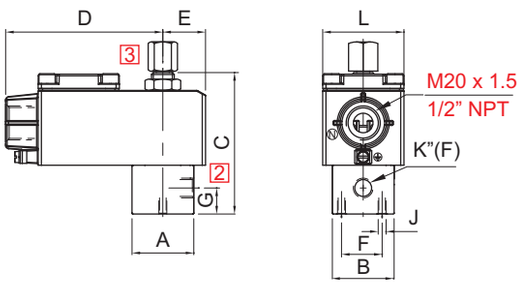

TERMINAL BOX/ Ex d LARGE ENCLOSURE, TYPE 16, 19, 37, 39, 58, 58LT, LC

K (PORT SIZE)	A	B	C	D	E	F	G	J	L	BODY MATL.	CONST. REF.
VALVE TYPE : 20201											
1/8”, 1/4”	38	38	103	97	26	25	16	M6	50	AL, BR	20
3/8”, 1/2”	60	38	115	97	26	25	20.5	M6	50	AL, BR	21
1/8”, 1/4”	44	Ø48	111	97	26	25	17	M6	50	SS	22
1/2”	58	Ø62	131	103	29	25	14	M6	50	SS	26
VALVE TYPE : 20202											
1/8”, 1/4”	50	50	124	103	28	25	17	M6	50	AL, BR	23
3/8”, 1/2”	65	50	124	103	28	25	14	M6	50	AL, BR	24
3/8”, 1/2”	58	Ø62	131	103	29	25	14	M6	50	SS	25
1/4”	44	Ø48	111	97	25	25	17	M6	50	SS	27

ROTEX
Engineering For The Future

2/2 DIRECT ACTING NORMALLY OPEN SOLENOID VALVE

DIMENSIONS

All Dimensions are in mm

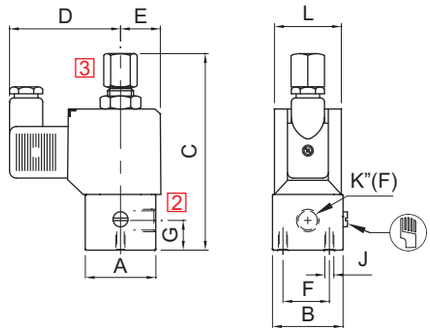

PLUG IN SOLENOID TYPE 22

K (PORT SIZE)	A	B	C	D	E	F	G	J	L	BODY MATL.	CONST. REF.
VALVE TYPE : 20201											
1/8", 1/4"	38	38	103	60	22	25	16	M6	36	AL, BR	16
3/8", 1/2"	60	38	115	60	22	25	20.5	M6	36	AL, BR	17
1/8", 1/4"	44	Ø48	111	60	22	25	17	M6	36	SS	18
3/8", 1/2"	58	Ø62	131	60	22	25	14	M6	36	SS	19

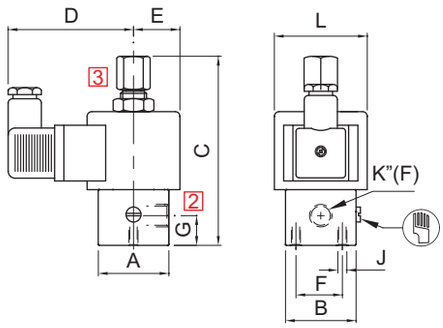

SQUARE PLUG IN SOLENOID TYPE 25

K (PORT SIZE)	A	B	C	D	E	F	G	J	L	BODY MATL.	CONST. REF.
VALVE TYPE : 20201											
1/8", 1/4"	38	38	103	68	25	25	16	M6	Ø50	AL, BR	20
3/8", 1/2"	60	38	115	68	25	25	20.5	M6	Ø50	AL, BR	21
1/8", 1/4"	44	Ø48	111	68	25	25	17	M6	Ø50	SS	22
1/2"	58	Ø62	131	68	29	25	14	M6	Ø50	SS	26
VALVE TYPE : 20201											
1/8", 1/4"	50	50	124	68	25	25	17	M6	Ø50	AL, BR	23
3/8", 1/2"	65	50	124	68	25	25	14	M6	Ø50	AL, BR	24
3/8", 1/2"	58	Ø62	131	68	29	25	14	M6	Ø50	SS	25
1/4"	44	Ø48	111	68	25	25	17	M6	Ø50	SS	27

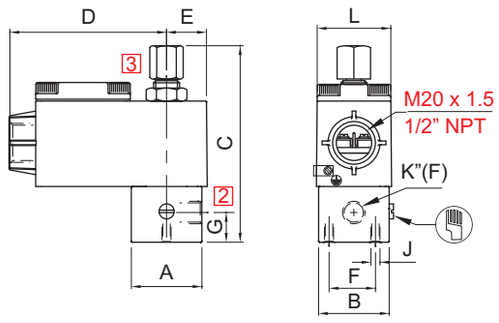

TERMINAL BOX/ Ex d ENCLOSURE, TYPE 16, 19, 37, 39, 58, 58LT

K (PORT SIZE)	A	B	C	D	E	F	G	J	L	BODY MATL.	CONST. REF.
VALVE TYPE : 20201											
1/8", 1/4"	38	38	103	85	22	25	16	M6	36	AL, BR	16
3/8", 1/2"	60	38	115	85	22	25	20.5	M6	36	AL, BR	17
1/8", 1/4"	44	Ø48	111	85	22	25	17	M6	36	SS	18
3/8", 1/2"	58	Ø62	131	85	22	25	14	M6	36	SS	19

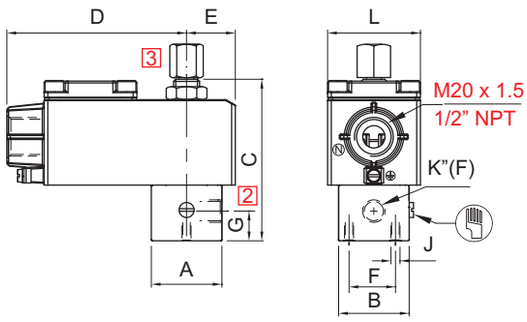

TERMINAL BOX/ Ex d LARGE ENCLOSURE, TYPE 16, 19, 37, 39, 58, 58LT, LC

K (PORT SIZE)	A	B	C	D	E	F	G	J	L	BODY MATL.	CONST. REF.
VALVE TYPE : 20201											
1/8", 1/4"	38	38	103	97	26	25	16	M6	50	AL, BR	20
3/8", 1/2"	60	38	115	97	26	25	20.5	M6	50	AL, BR	21
1/8", 1/4"	44	Ø48	111	97	26	25	17	M6	50	SS	22
1/2"	58	Ø62	131	103	29	25	14	M6	50	SS	26
VALVE TYPE : 20201											
1/8", 1/4"	50	50	124	103	28	25	17	M6	50	AL, BR	23
3/8", 1/2"	65	50	124	103	28	25	14	M6	50	AL, BR	24
3/8", 1/2"	58	Ø62	131	103	29	25	14	M6	50	SS	25
1/4"	44	Ø48	111	97	25	25	17	M6	50	SS	27

Specifications are subject to change without notice

2/2 DIRECT ACTING, NC/ NO (ALL PORTS IN BODY) SOLENOID VALVE

TYPE	PRESSURE

TYPE	PRESSURE
20270	0 - 20 bar

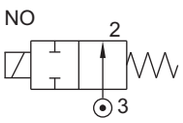

TYPE	PRESSURE

FEATURES

- Bubble tight shut off
- Manual override optionally provided
- Suitable for vacuum up to 10^{-6} torr
- Vibration resistance up to 9g
- Suitable for high speed cycling
- Speed up to 1000 cycles/ min.
- Life >10 million cycles



WETTED PARTS

Code		B2	B5
Body		Brass	SS 316
Internals		Brass and Plastic	SS 316 and Plastic
Guide Assembly	SS 304		
Shadow-Ring	Copper/ Silver/ None		
Plunger, Insert	SS 430		
Spring	SS 302		
Seat, Seals	NBR, Viton, EPDM		

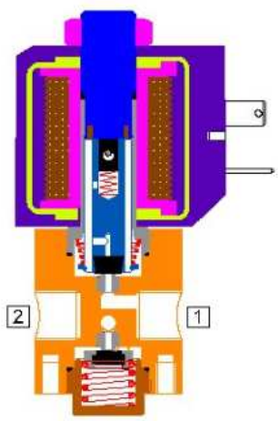

AMBIENT AND FLUID TEMPERATURE

-30 °C to 75 °C

SPECIAL VERSION AND SUFFIX

Suffix : (Valve) OX, AM
Special version : (Solenoid) CO, FR, SS, LC, III, TM

MEDIA

Air, Inert gases, Water, Free flowing liquid, Oil, Diesel, Kerosene, LPG

APPLICATION

Analyzer and Dispensing

PORT CONNECTION

ACTION	INLET	OUTLET
NC	1	2
NO	3	2

SPARES

(Refer page 25 for ordering code)

SPARE KIT	CODE
Seal Kit : Oring Set and Plunger Assembly	98
Repair Kit : Oring Set, Plunger Assembly, Springs, Manual Override, Guide assembly	99
Solenoid Kit : Solenoid, Gasket	34

APPROVAL

(* applied for)

Approval	Nema 4X	IP67	Ex d IIC T4 or T5 or T6 IP66	Ex ia IIC T6 IP67	DGMS	CCOE
ISI		✓	✓	✓	✓	✓
CE		✓	✓	✓		
UL	✓		*			
CCPEL			✓	✓		
EAC			✓	✓		
IECEx			✓	✓		

Contact Rotex for
- Any other ambient, fluid temperature, media and application
- UL listed, c UL Listed general purpose Valve

⚠ OIL Media Temperature Restricted from 0 °C to 100 °C

ROTEX
Engineering For The Future

2/2 DIRECT ACTING, NC/ NO (ALL PORTS IN BODY) SOLENOID VALVE

SPECIFICATION

PORT CONNECTION			PRE-SSURE bar		ORIFICE (mm)	FLOW FACTOR kv (LPM OF WATER @ 1 bar ΔP)	VALVE TYPE	PILOT PRESSURE	BODY MATERIAL AND INTERNALS				SEALS					MANUAL OVERRIDE			SOLENOID ENCLOSURE								SUFFIX		POWER VA			CONSTRUCTION REFERENCE NUMBER
																					WEATHER PROOF				EXPLOSION PROOF										
SIZE	BSP(F)	NPT(F)	MINIMUM	MAXIMUM					ALUMINIUM	ALUMINIUM + SS	BRASS (STD. PORT NPT)	SS316 (STD. PORT NPT)	NBR	Viton	EPDM	HYTREL	PTFE	NIL	STAYPUT CUM MOMENTARY	MOMENTARY	FLYING LEAD	PLUG IN, IP67	SQ. PLUG IN, IP67	TERMINAL BOX IP67	EXPLOSION PROOF IIC, IP67	LARGE ENCLOSURE	SOLENOID SIZE	OXYGEN	AMONIA	AC INRUSH	AC HOLDING	DC	

2/2 DIAPHRAGM OPERATED, NORMALLY CLOSED/ OPEN SOLENOID VALVE

TYPE	PRESSURE
24109	0.5 - 10 bar

NC

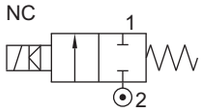

TYPE	PRESSURE
24201	0.5 - 10 bar
24202	1 - 20 bar

NO

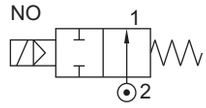

TYPE	PRESSURE
24101	0.5 - 10 bar
24102	1 - 20 bar

NC

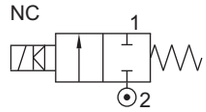

FEATURES

- Bubble tight shut off
- Manual override optionally provided
- Vibration resistance up to 9g
- Suitable for high speed cycling
- Speed up to 100 cycles/ min.
- Life >2 million cycles



WETTED PARTS

Code	※	B13	B12
Body		CF8	CF8M
Internal		SS316	SS316
Diaphragm	NBR, Viton, EPDM		
Guide Assembly	SS 304		
Shadow-Ring	Copper / Silver / None		
Plunger, Insert	SS 430		
Spring	SS 302		
Seat, Seals	NBR, Viton, EPDM		
Fasteners	SS 304		

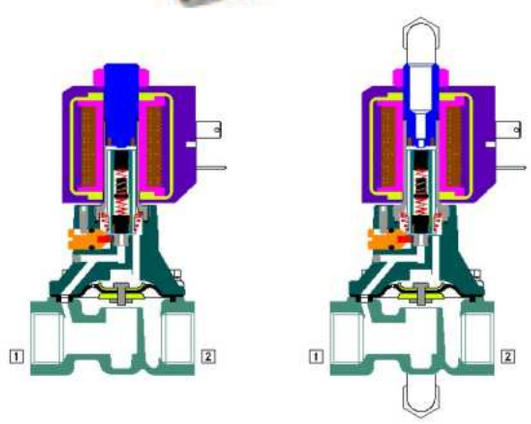

AMBIENT AND FLUID TEMPERATURE

5 °C to 75 °C

SPECIAL VERSION AND SUFFIX

Suffix : (Valve) OX, AM
Special version : (Solenoid) CO, FR, SS, LC, III, TM

MEDIA

Air, Water, Inert Gases, Liquid, Oil, Diesel, Kerosene, LPG, CNG

APPLICATION

Drain, Deluge Valve operation, Dispensing

PORT CONNECTION

ACTION	INLET	OUTLET
NC	2	1
NO	2	1

SPARES

(Refer page 25 for ordering code)

SPARE KIT	CODE
Diaphragm Kit : Diaphragm Kit	100
Seal Kit : Oring Set, Diaphragm Kit, Plunger Assembly	98
Repair Kit : Oring Set, Diaphragm Kit, Plunger Assembly, Fastener, Springs, Manual Override, Guide assembly	99
Solenoid Kit : Solenoid, Gasket	34

APPROVAL

(* applied for)

Approval	TYPE 4X, 6P	IP67	Ex d IIC T4 or T5 or T6 IP66	Ex ia IIC T6 IP67	DGMS	CCOE
		✓	✓	✓	✓	✓
CE		✓	✓	✓		
UL	✓		*			
CSPEL			✓	✓		
EAC			✓	✓		
IECEx			✓	✓		

Contact Rotex for
- Any other ambient, fluid temperature, media and application
- UL listed, cULus Listed general purpose Valve

⚠ OIL Media Temperature Restricted from 0 °C to 100 °C

Specifications are subject to change without notice.

ROTEX
Engineering For The Future

2/2 DIAPHRAGM OPERATED, NORMALLY CLOSED/ OPEN SOLENOID VALVE

SPECIFICATION

PORT CONNECTION			PRE-SSURE bar		ORIFICE (mm)	FLOW FACTOR kv (LPM OF WATER @ 1 bar ΔP)	VALVE TYPE	PILOT PRESSURE	BODY MATERIAL AND INTERNALS			SEALS (1)					MANUAL OVERRIDE			SOLENOID ENCLOSURE							SUFFIX		POWER VA			CONSTRUCTION REFERENCE NUMBER
																				WEATHER PROOF				EXPLOSION PROOF									
SIZE	BSP(F)	NPT(F)	MINIMUM	MAXIMUM					ALUMINIUM (2)	CF8M & SS316	CF8 & SS316	NBR	Viton	EPDM	HYTREL	PTFE	NIL	STAYPUT CUM MOMENTARY	MOMENTARY	FLYING LEAD	PLUG IN, IP67	SQ. PLUG IN, IP67	TERMINAL BOX IP67	EXPLOSION PROOF IIC, IP67	LARGE ENCLOSURE	SOLENOID SIZE	OXYGEN	AMONIA	AC INRUSH	AC HOLDING	DC	
2/2 NORMALLY CLOSED																															
1/2"	4G	4R	0.5	10	12	60	24101		※	B12	B13	S0	S2	S1			※	M6	M8		22	25	T	E	III	14	✓	✓	18	12	8	29
			1	20	12	60	24102		※	B12	B13	S0	S2	S1			※	M6	M8		22	25	T	E	III	14	✓	✓	18	12	8	29
3/4"	6G	6R	0.5	10	20	110	24101		※	B12	B13	S0	S2	S1			※	M6	M8		22	25	T	E	III	14	✓	✓	18	12	8	30
			1	20	20	110	24102		※	B12	B13	S0	S2	S1			※	M6	M8		22	25	T	E	III	14	✓	✓	18	12	8	30
1"	8G	8R	0.5	10	25	185	24109		※	B12	B13	S0	S2				※	M6	M8		22	25	T	E	III	14	✓	✓	18	12	8	33
			1	20	25	185	24102V01		※	B12	B13	S0	S2				※	M6	M8		22	25	T	E	III	14	✓	✓	18	12	8	33
11/4"	10G	10R	0.5	10	40	400	24101			B12	B13	S0	S2				※	M6	M8		22	25	T	E	III	14	✓	✓	18	12	8	34
			1	20	40	400	24102			B12	B13	S0	S2				※	M6	M8		22	25	T	E	III	14	✓	✓	18	12	8	34
11/2"	12G	12R	0.5	10	40	440	24101			B12	B13	S0	S2				※	M6	M8		22	25	T	E	III	14	✓	✓	18	12	8	35
			1	20	40	440	24102			B12	B13	S0	S2				※	M6	M8		22	25	T	E	III	14	✓	✓	18	12	8	35
2"	16G	16R	0.5	10	50	650	24101V01			B12	B13	S0	S2				※	M6	M8		22	25	T	E	III	14	✓	✓	18	12	8	36
			1	20	50	650	24102V01			B12	B13	S0	S2				※	M6	M8		22	25	T	E	III	14	✓	✓	18	12	8	36
21/2"	20G	20R	0.5	10	65	800	24101			B12	B13	S0	S2				※	M6	M8		22	25	T	E	III	14	✓	✓	18	12	8	85
			1	20	65	800	24102			B12	B13	S0	S2				※	M6	M8		22	25	T	E	III	14	✓	✓	18	12	8	85
3"	24G		0.5	10	80	1000	24101			B12	B13	S0	S2				※	M6	M8		22	25	T	E	III	14	✓	✓	18	12	8	85
			1	20	80	1000	24102			B12	B13	S0	S2				※	M6	M8		22	25	T	E	III	14	✓	✓	18	12	8	85
2/2 NORMALLY OPEN																															
1/2"	4G	4R	0.5	10	12	60	24201		※	B12	B13	S0	S2	S1			※	M6	M8		22	25	T	E	III	14	✓	✓	18	12	8	37
			1	20	12	60	24202		※	B12	B13	S0	S2	S1			※	M6	M8		22	25	T	E	III	14	✓	✓	18	12	8	37
3/4"	6G	6R	0.5	10	20	110	24201		※	B12	B13	S0	S2	S1			※	M6	M8		22	25	T	E	III	14	✓	✓	18	12	8	38
			1	20	20	110	24202		※	B12	B13	S0	S2	S1			※	M6	M8		22	25	T	E	III	14	✓	✓	18	12	8	38
1"	8G	8R	0.5	10	25	185	24201V01		※	B12	B13	S0	S2				※	M6	M8		22	25	T	E	III	14	✓	✓	18	12	8	39
			1	20	25	185	24202V01		※	B12	B13	S0	S2				※	M6	M8		22	25	T	E	III	14	✓	✓	18	12	8	39
11/4"	10G	10R	0.5	10	40	400	24201			B12	B13	S0	S2				※	M6	M8		22	25	T	E	III	14	✓	✓	18	12	8	42
			1	20	40	400	24202			B12	B13	S0	S2				※	M6	M8		22	25	T	E	III	14	✓	✓	18	12	8	42
11/2"	12G	12R	0.5	10	40	440	24201			B12	B13	S0	S2				※	M6	M8		22	25	T	E	III	14	✓	✓	18	12	8	43
			1	20	40	440	24202			B12	B13	S0	S2				※	M6	M8		22	25	T	E	III	14	✓	✓	18	12	8	43
2"	16G	16R	0.5	10	50	650	24201V01			B12	B13	S0	S2				※	M6	M8		22	25	T	E	III	14	✓	✓	18	12	8	40
			1	20	50	650	24202V01			B12	B13	S0	S2				※	M6	M8		22	25	T	E	III	14	✓	✓	18	12	8	40
21/2"	20G	20R	0.5	10	65	800	24201			B12	B13	S0	S2				※	M6	M8		22	25	T	E	III	14	✓	✓	18	12	8	85
			1	20	65	800	24202			B12	B13	S0	S2				※	M6	M8		22	25	T	E	III	14	✓	✓	18	12	8	85
3"	24G		0.5	10	80	1000	24201			B12	B13	S0	S2				※	M6	M8		22	25	T	E	III	14	✓	✓	18	12	8	85
			1	20	80	1000	24202			B12	B13	S0	S2				※	M6	M8		22	25	T	E	III	14	✓	✓	18	12	8	85

Cable Entry	T	E																				
		Ex d					Ex a				Ex emb											
M20 x 1.5	1 9	3 9	8 7	M	S	6	6	M	S	5	8	M	S	5	8	L	T	M	S			
M25 x 1.5			8 7			6	6			5	8			5	8	L	T					
1/2" NPT	1 6	3 7	8 7	N	S	6	6	N	S	5	8	N	S	5	8	L	T	N	S			

※ = Do not specify when opted for. Refer Page # 22 for Value of ※
✓= Options available

(1) Select appropriate Rubber Diaphragm for Media other than AIR.

(2) Aluminium Cast Body to be Only used with AIR Media.

Specifications are subject to change without notice.

ROTEX
Engineering For The Future

2/2 DIAPHRAGM OPERATED, FLANGE END, NORMALLY CLOSED/ OPEN SOLENOID VALVE

SPECIFICATION

PORT CONNECTION			PRESSURE bar		ORIFICE (mm)	FLOW FACTOR kv (LPM OF WATER @ 1 bar ΔP)	VALVE TYPE	BODY MATERIAL AND INTERNALS			SEALS (1)					MANUAL OVERRIDE			SOLENOID ENCLOSURE						SUFFIX		POWER VA			CONSTRUCTION REFERENCE NUMBER
																			WEATHER PROOF			EXPLOSION PROOF								
SIZE	FLANGE	CONNECTION	MINIMUM	MAXIMUM				ALUMINIUM	SS 316/ CF8	SS 316/ CF8M	NBR	Viton	EPDM	HYTREL	PTFE	NIL	STAYPUT CUM MOMENTARY	MOMENTARY	FLYING LEAD	PLUG IN, IP67	SQ. PLUG IN, IP67	TERMINAL BOX IP67	FPJB Ex d IIC, T4 OR T6, IP67	LARGE ENCLOSURE	SOLENOID SIZE	OXYGEN	AMONIA	AC INRUSH	AC HOLDING	DC	
ASME B16.5 150 CLASS FLANGE							2/2 NORMALLY CLOSED																						
1/2"	4F		0.5	20	12	60	FADFG00			B13	B12	S0	S2	S1		※	M6	M8		22	25	T	E	III	14	✓	✓	18	12	8	
3/4"	6F		0.5	20	20	110	FADFGA0			B13	B12	S0	S2	S1		※	M6	M8		22	25	T	E	III	14	✓	✓	18	12	8	
1"	8F		0.5	20	25	185	FADFGA1V01			B13	B12	S0	S2			※	M6	M8		22	25	T	E	III	14	✓	✓	18	12	8	
11/4"	10F		0.5	20	40	400	FADFGA3			B13	B12	S0	S2			※	M6	M8		22	25	T	E	III	14	✓	✓	18	12	8	
11/2"	12F		0.5	20	40	440	FADFGA4			B13	B12	S0	S2			※	M6	M8		22	25	T	E	III	14	✓	✓	18	12	8	
2"	16F		0.5	20	50	650	FADFGA5V01			B13	B12	S0	S2			※	M6	M8		22	25	T	E	III	14	✓	✓	18	12	8	
21/2"	20F		0.5	20	65	800	FADFGA6			B13	B12	S0	S2			※	M6	M8		22	25	T	E	III	14	✓	✓	18	12	8	
3"	24F		0.5	20	80	1000	FADFGA7			B13	B12	S0	S2			※	M6	M8		22	25	T	E	III	14	✓	✓	18	12	8	
4"	32F		1	20	100	1400	FADFGA8			B13	B12	S0	S2			※	M6	M8		22	25	T	E	III	14	✓	✓	18	12	8	
ASME B16.5 300 CLASS FLANGE																														
1/2"	4F		0.5	20	12	60	FADFH00			B13	B12	S0	S2	S1		※	M6	M8		22	25	T	E	III	14	✓	✓	18	12	8	
3/4"	6F		0.5	20	20	110	FADFHA0			B13	B12	S0	S2	S1		※	M6	M8		22	25	T	E	III	14	✓	✓	18	12	8	
1"	8F		0.5	20	25	185	FADFHA1V01			B13	B12	S0	S2			※	M6	M8		22	25	T	E	III	14	✓		18	12	8	
11/4"	10F		0.5	20	40	400	FADFHA3			B13	B12	S0	S2			※	M6	M8		22	25	T	E	III	14	✓	✓	18	12	8	
11/2"	12F		0.5	20	40	440	FADFHA4			B13	B12	S0	S2			※	M6	M8		22	25	T	E	III	14	✓	✓	18	12	8	
2"	16F		0.5	20	50	650	FADFHA5V01			B13	B12	S0	S2			※	M6	M8		22	25	T	E	III	14	✓	✓	18	12	8	
21/2"	20F		0.5	20	65	800	FADFHA6			B13	B12	S0	S2			※	M6	M8		22	25	T	E	III	14	✓	✓	18	12	8	
3"	24F		0.5	20	80	1000	FADFHA7			B13	B12	S0	S2			※	M6	M8		22	25	T	E	III	14	✓	✓	18	12	8	
ASME B16.5 150 CLASS FLANGE							2/2 NORMALLY OPEN																						
1/2"	4F		0.5	20	12	60	FAEFG00			B13	B12	S0	S2	S1		※	M6	M8		22	25	T	E	III	14	✓	✓	18	12	8	
3/4"	6F		0.5	20	20	110	FAEFGA0			B13	B12	S0	S2	S1		※	M6	M8		22	25	T	E	III	14	✓	✓	18	12	8	
1"	8F		0.5	20	25	185	FAEFGA1V01			B13	B12	S0	S2			※	M6	M8		22	25	T	E	III	14	✓	✓	18	12	8	
11/4"	10F		0.5	20	40	400	FAEFGA3			B13	B12	S0	S2			※	M6	M8		22	25	T	E	III	14	✓	✓	18	12	8	
11/2"	12F		0.5	20	40	440	FAEFGA4			B13	B12	S0	S2			※	M6	M8		22	25	T	E	III	14	✓	✓	18	12	8	
2"	16F		0.5	20	50	650	FAEFGA5V01			B13	B12	S0	S2			※	M6	M8		22	25	T	E	III	14	✓	✓	18	12	8	
21/2"	20F		0.5	20	65	800	FAEFGA6			B13	B12	S0	S2			※	M6	M8		22	25	T	E	III	14	✓	✓	18	12	8	
3"	24F		0.5	20	80	1000	FAEFGA7			B13	B12	S0	S2			※	M6	M8		22	25	T	E	III	14	✓	✓	18	12	8	
ASME B16.5 300 CLASS FLANGE																														
1/2"	4F		0.5	20	12	60	FAEFH00			B13	B12	S0	S2	S1		※	M6	M8		22	25	T	E	III	14	✓	✓	18	12	8	
3/4"	6F		0.5	20	20	110	FAEFHA0			B13	B12	S0	S2	S1		※	M6	M8		22	25	T	E	III	14	✓	✓	18	12	8	
1"	8F		0.5	20	25	185	FAEFHA1V01			B13	B12	S0	S2			※	M6	M8		22	25	T	E	III	14	✓		18	12	8	
11/4"	10F		0.5	20	40	400	FAEFHA3			B13	B12	S0	S2			※	M6	M8		22	25	T	E	III	14	✓	✓	18	12	8	
11/2"	12F		0.5	20	40	440	FAEFHA4			B13	B12	S0	S2			※	M6	M8		22	25	T	E	III	14	✓	✓	18	12	8	
2"	16F		0.5	20	50	650	FAEFHA5V01			B13	B12	S0	S2			※	M6	M8		22	25	T	E	III	14	✓	✓	18	12	8	
21/2"	20F		0.5	20	65	800	FAEFHA6			B13	B12	S0	S2			※	M6	M8		22	25	T	E	III	14	✓	✓	18	12	8	
3"	24F		0.5	20	80	1000	FAEFHA7			B13	B12	S0	S2			※	M6	M8		22	25	T	E	III	14	✓	✓	18	12	8	

CODE	FLANGE TYPE
F	Flange End
AD	24102 SOV as base Model
AE	24202 SOV as base Model
FG	Flange End as per ASME 16.5 #150 Class
FH	Flange End as per ASME 16.5 #300 Class

SOLENOID		
Cable Entry	T	E
		Ex d / Ex ia / Ex emb
M20 x 1.5	19	39 87MS 66MS 58MS 58LTMS
M25 x 1.5		87 66 58 58LT
1/2" NPT	16	37 87NS 66NS 58NS 58LTNS

※ = Do not specify when opted for. Refer Page # 22 for Value of ※
✓= Options available

(1) Select appropriate Rubber Diaphragm for Media other than AIR.

Specifications are subject to change without notice.

2/2 DIAPHRAGM OPERATED, NORMALLY CLOSED/ OPEN SOLENOID VALVE

ORDERING CODE

VALVE+SOLENOID

VALVE TYPE - SUFFIX - PORT CONNECTION - BODY AND INTERNALS - MANUA
- SEAL - MEDIA + SIZE - VOLTAGE - CURRENT - POWER - SOLENOID ENCLOSU
SPECIAL VERSION - POWER - INSULATION - APPROVAL
e.g. 24101-12-4G-S0+I-230V-50Hz-22, 24102V01-25-B12-M6-S2+III-24V-DC-16-

DIMENSIONS

All Dimensions are in mm

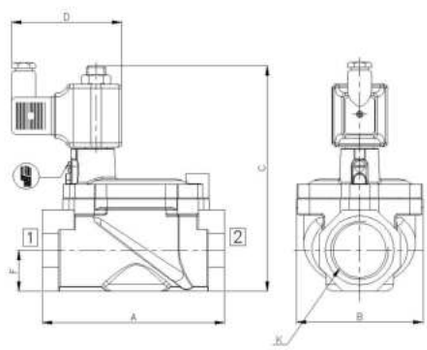

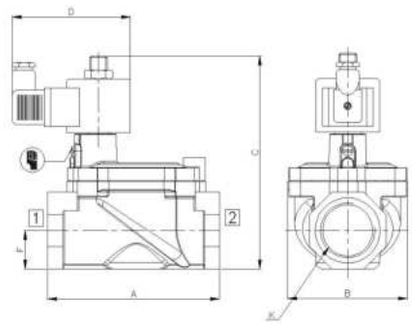

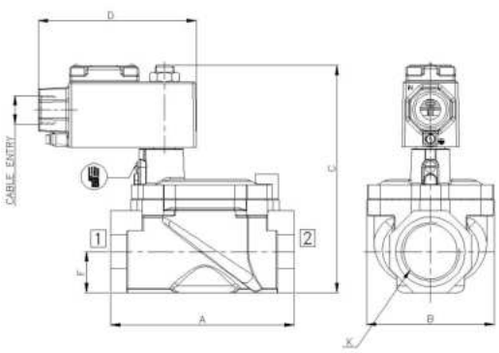

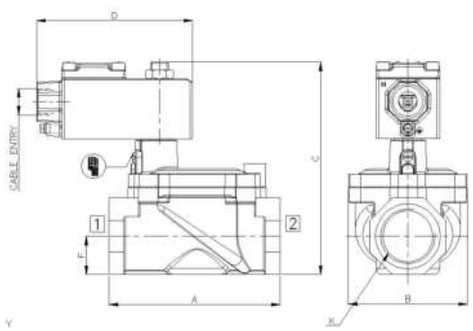

NW	K (PORT SIZE)	A	B	C	D	E	F	CONST. REF.
VALVE TYPE: 24109, 24101, 24102								
12	1/2”	65	50	128	60	76	15	29
20	3/4”	84	64	137	60	85	17	30
25	1”	110	82	148	60	76	22	33
40	11/4”	135	94	166	60	95	30	34
40	11/2”	135	94	166	60	95	30	35
50	2”	165	140	184	60	128	38	36
65	21/2”	200	169	208	60	159	45	54
80	3”	235	198	224	60	194	53	56

Specifications are subject to change without notice.

ROTEX
Engineering For The Future

2/2 DIAPHRAGM OPERATED, NORMALLY CLOSED/ OPEN SOLENOID VALVE

DIMENSIONS

All Dimensions are in mm

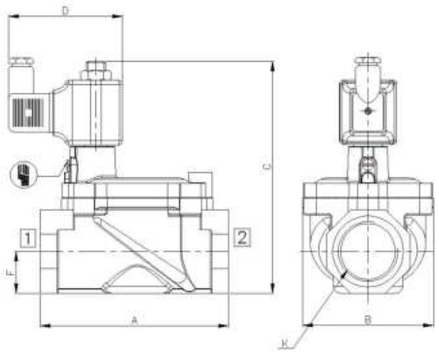

PLUG IN SOLENOID TYPE 22

NW	K (PORT SIZE)	A	B	C	D	E	F	CONST. REF.
VALVE TYPE: 24109, 24101,24102								
25	1”	110	82	148	60	76	22	33
40	11/4”	135	94	166	60	95	30	34
40	11/2”	135	94	166	60	95	30	35
50	2”	165	140	184	60	128	38	36
65	21/2”	200	169	208	60	159	45	54
80	3”	235	198	224	60	194	53	56

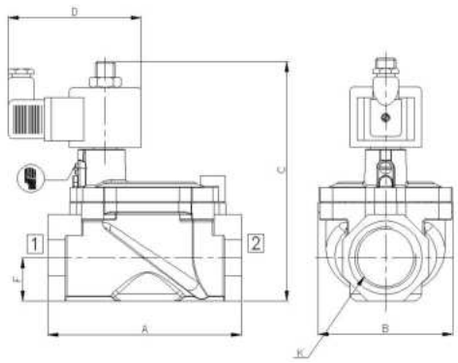

SQUARE PLUG IN SOLENOID TYPE 25

NW	K (PORT SIZE)	A	B	C	D	E	F	CONST. REF.
VALVE TYPE: 24109, 24101,24102								
25	1”	110	82	148	68	76	22	33
40	11/4”	135	94	166	68	95	30	34
40	11/2”	135	94	166	68	95	30	35
50	2”	165	140	184	68	128	38	36
65	21/2”	200	169	208	68	159	45	54
80	3”	235	198	224	68	194	53	56

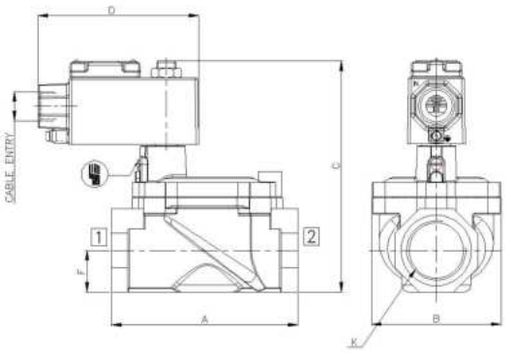

TERMINAL BOX/ Ex d ENCLOSURE, TYPE 16, 19, 37, 39, 58, 58LT

NW	K (PORT SIZE)	A	B	C	D	E	F	CONST. REF.
VALVE TYPE: 24109, 24101,24102								
25	1”	110	82	148	85	76	22	33
40	11/4”	135	94	166	85	95	30	34
40	11/2”	135	94	166	85	95	30	35
50	2”	165	140	184	85	128	38	36
65	21/2”	200	169	208	85	159	45	54
80	3”	235	198	224	85	194	53	56

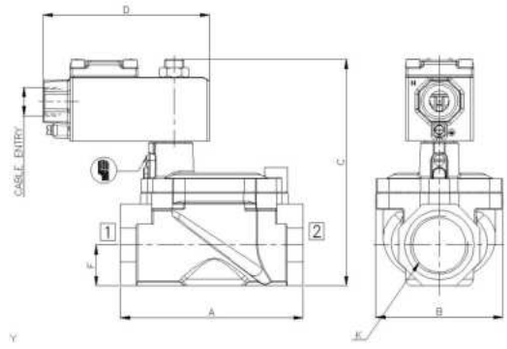

TERMINAL BOX/ Ex d LARGE ENCLOSURE, TYPE 16, 19, 37, 39, 58, 58LT, LC

NW	K (PORT SIZE)	A	B	C	D	E	F	CONST. REF.
VALVE TYPE: 24109, 24101,24102								
25	1”	110	82	148	97	76	22	33
40	11/4”	135	94	166	97	95	30	34
40	11/2”	135	94	166	97	95	30	35
50	2	165	140	184	97	128	38	36
65	21/2”	200	169	208	97	159	45	54
80	3”	235	198	224	97	194	53	56

Specifications are subject to change without notice.

2/2 DIAPHRAGM OPERATED, NORMALLY CLOSED/ OPEN SOLENOID VALVE

DIMENSIONS

All Dimensions are in mm

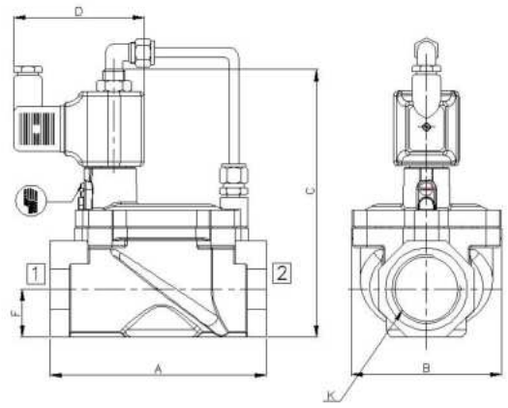

PLUG IN SOLENOID TYPE 22

NW	K (PORT SIZE)	A	B	C	D	E	F	G	CONST. REF.
VALVE TYPE: 24201,24202									
12	1/2", 3/8", 1/4"	65	50	128	82	00	15	00	37
20	3/4"	84	64	137	82	00	17	00	38
25	1"	110	82	148	82	00	25	00	39
40	11/2"	135	94	166	82	00	30	00	40
50	2"	165	140	184	82	00	38	00	41
65	21/2"	200	169	208	82	00	45	00	42
80	3"	235	198	224	82	00	53	00	43

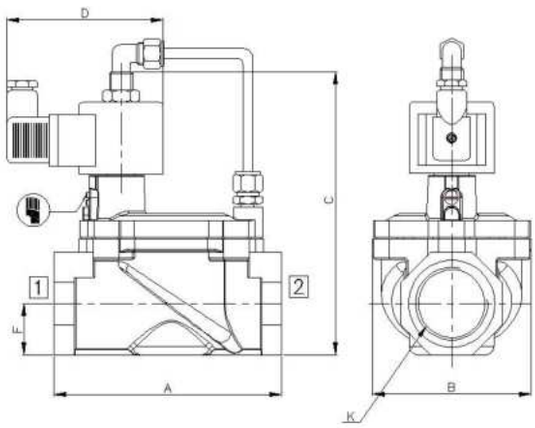

SQUARE PLUG IN SOLENOID TYPE 25

NW	K (PORT SIZE)	A	B	C	D	E	F	G	CONST. REF.
VALVE TYPE: 24201, 24202									
12	1/2", 3/8", 1/4"	65	50	128	93	00	15	00	37
20	3/4"	84	64	137	93	00	17	00	38
25	1"	110	82	148	93	00	25	00	39
40	11/2"	135	94	166	93	00	30	00	40
50	2"	165	140	184	93	00	38	00	41
65	21/2"	200	169	208	93	00	45	00	42
80	3"	235	198	224	93	00	53	00	43

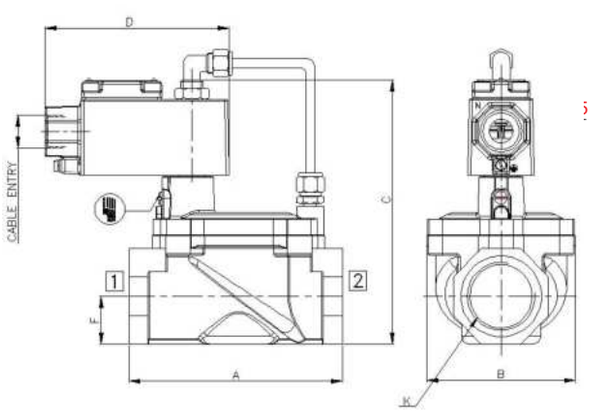

TERMINAL BOX/ Ex d ENCLOSURE, TYPE 16, 19, 37, 39, 58, 58LT

NW	K (PORT SIZE)	A	B	C	D	E	F	G	CONST. REF.
VALVE TYPE: 24201, 24202									
12	1/2", 3/8", 1/4"	65	50	128	116	00	15	00	37
20	3/4"	84	64	137	116	00	17	00	38
25	1"	110	82	148	116	00	25	00	39
40	11/2"	135	94	166	116	00	30	00	40
50	2"	165	140	184	116	00	38	00	41
65	21/2"	200	169	208	116	00	45	00	42
80	3"	235	198	224	116	00	53	00	43

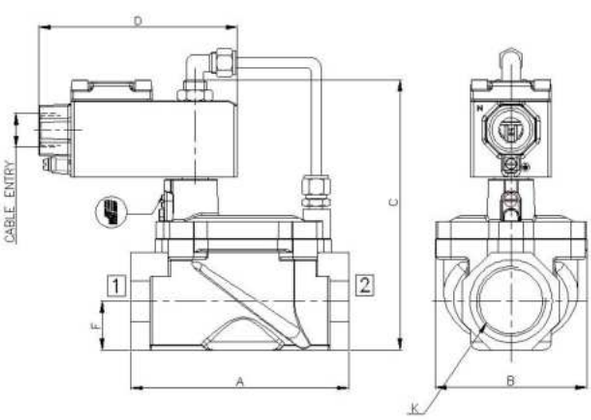

TERMINAL BOX/ Ex d LARGE ENCLOSURE, TYPE 16, 19, 37, 39, 58, 58LT, LC

NW	K (PORT SIZE)	A	B	C	D	E	F	G	CONST. REF.
VALVE TYPE: 24201, 24202									
12	1/2", 3/8", 1/4"	65	50	128	123	00	15	00	37
20	3/4"	84	64	137	123	00	17	00	38
25	1"	110	82	148	123	00	25	00	39
40	11/2"	135	94	166	123	00	30	00	40
50	2"	165	140	184	123	00	38	00	41
65	21/2"	200	169	208	123	00	45	00	42
80	3"	235	198	224	123	00	53	00	43

Specifications are subject to change without notice.

ROTEX
Engineering For The Future

2/2 DIAPHRAGM OPERATED, NORMALLY CLOSED/ OPEN SOLENOID VALVE

DIMENSIONS

All Dimensions are in mm

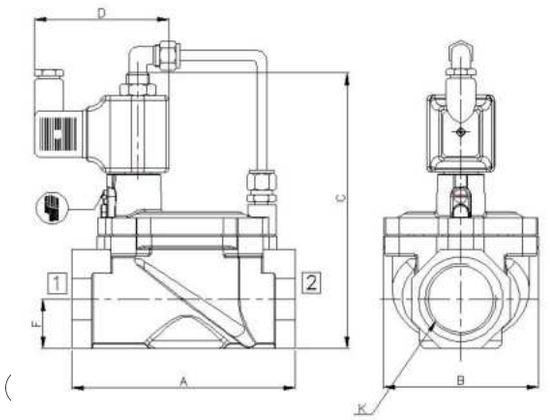

PLUG IN SOLENOID TYPE 22

NW	K (PORT SIZE)	A	B	C	D	E	F	CONST. REF.
VALVE TYPE: 24201, 24202								
25	1”	110	82	148	82	00	22	41
40	11/4”	135	94	166	82	00	30	42
40	11/2”	135	94	166	82	00	30	43
50	2”	185	140	184	82	000	38	44
65	21/2”	200	169	208	82	000	45	83
80	3”	235	198	224	82	000	53	89

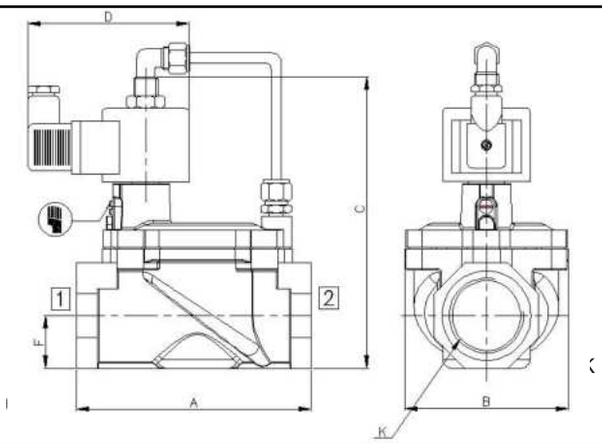

SQUARE PLUG IN SOLENOID TYPE 25

NW	K (PORT SIZE)	A	B	C	D	E	F	CONST. REF.
VALVE TYPE: 24201, 24202								
25	1”	110	82	148	93	00	22	41
40	11/4”	135	94	166	93	00	30	42
40	11/2”	135	94	166	93	00	30	43
50	2”	185	140	184	93	000	38	44
65	21/2”	200	169	208	93	000	45	83
80	3”	235	198	224	93	000	53	89

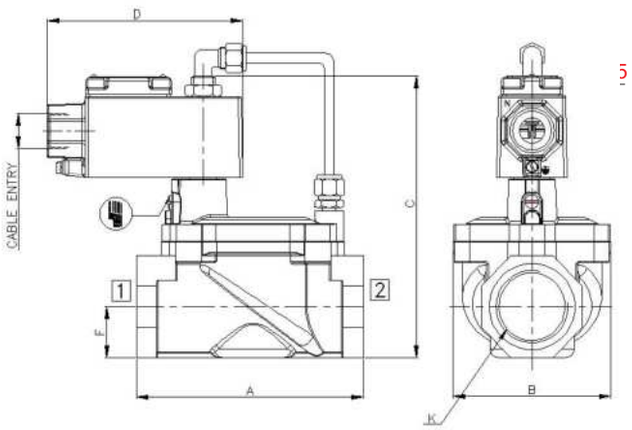

TERMINAL BOX/ Ex d ENCLOSURE, TYPE 16, 19, 37, 39, 58, 58LT

NW	K (PORT SIZE)	A	B	C	D	E	F	CONST. REF.
VALVE TYPE: 24201, 24202								
25	1”	110	82	148	116	00	22	41
40	11/4”	135	94	166	116	00	30	42
40	11/2”	135	94	166	116	00	30	43
50	2”	185	140	184	116	000	38	44
65	21/2”	200	169	208	116	00	45	83
80	3”	235	198	224	116	000	53	89

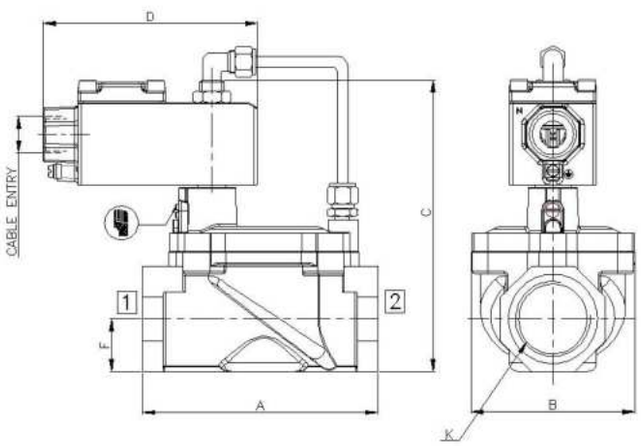

TERMINAL BOX/ Ex d LARGE ENCLOSURE, TYPE 16, 19, 37, 39, 58, 58LT, LC

NW	K (PORT SIZE)	A	B	C	D	E	F	CONST. REF.
VALVE TYPE: 24201, 24202								
25	1”	110	82	148	123	00	22	41
40	11/4”	135	94	166	123	00	30	42
40	11/2”	135	94	166	123	00	30	43
50	2”	185	140	184	123	000	38	44
65	21/2”	200	169	208	116	000	45	83
80	3”	235	198	224	116	000	53	89

Specifications are subject to change without notice.

2/2 DIAPHRAGM OPERATED, NORMALLY CLOSED SOLENOID VALVE

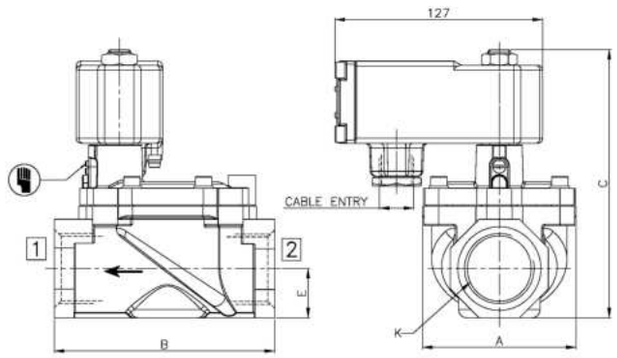

BCE SOLENOID/ Ex d TYPE 87

NW	K (PORT SIZE)	A	B	C	E	CONST. REF.
VALVE TYPE: 24101, 24102						
12	1/2", 3/8", 1/4"	50	65	128	15	29
20	3/4"	64	84	137	17	30
25	1"	82	110	148	22	33
40	1 1/2"	94	135	166	30	35
50	2"	140	165	184	38	36
65	2 1/2"	169	200	208	45	85
80	3"	198	235	224	53	85

6

2/2 DIAPHRAGM OPERATED, NORMALLY OPEN SOLENOID VALVE

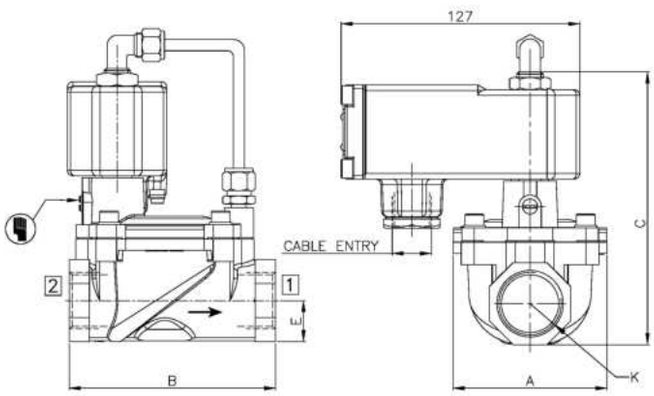

BCE SOLENOID/ Ex d TYPE 87

NW	K (PORT SIZE)	A	B	C	E	CONST. REF.
VALVE TYPE: 24201, 24202						
12	1/2", 3/8", 1/4"	50	65	128	15	37
20	3/4"	64	84	137	17	38
25	1"	82	110	148	22	39
40	1 1/2"	94	135	166	30	43
50	2"	140	165	184	38	40
65	2 1/2"	169	200	208	45	85
80	3"	198	235	224	53	85

2/2 DIRECT ACTING, HIGH ORIFICE NORMALLY CLOSED SOLENOID VALVE

TYPE	PRESSURE

TYPE	PRESSURE
20172V02LP	0 - 5 bar
20172V03LP-40	0 - 5 bar

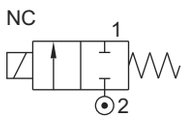

TYPE	PRESSURE
20172V02	0 - 10 bar
20172V03-40	0 - 10 bar

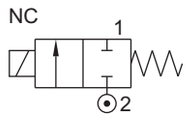

FEATURES

- Bubble tight shut off
- Vibration resistance up to 9g
- Suitable for high speed cycling
- Speed up to 100 cycles/ min.
- Life >2 million cycles
- Mount Valve Horizontal Only ((PIPE Connection Perrelal to Ground)



WETTED PARTS

Code		B12	B13
Body		CF8M	CF8
Diaphragm	Viton, NBR, EPDM		
Guide Assembly	SS 304		
Shadow-Ring	Copper		
Plunger, Insert	SS 430		
Spring	SS 302		
Seat, Seals	NBR, Viton, EPDM		
Fasteners	SS 304		

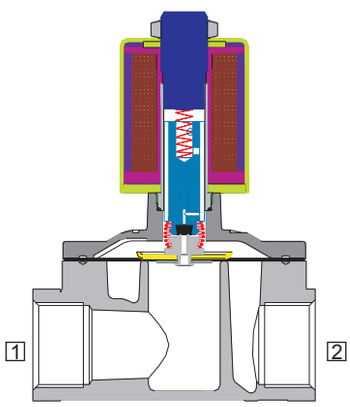

AMBIENT AND FLUID TEMPERATURE

-30 °C to 75 °C

SPECIAL VERSION AND SUFFIX

Suffix : (Valve) OX, AM
Special version : (Solenoid) CO, FR, SS

MEDIA

Air, Inert gases, Water, Free flowing liquid, Oil, Diesel, Kerosene, LPG, CNG

APPLICATION

Drain shut off

PORT CONNECTION

ACTION	INLET	OUTLET
NC	2	1

SPARES

(Refer page 25 for ordering code)

SPARE KIT	CODE
Diaphragm Kit : Diaphragm Set	100
Seal Kit : Oring Set, Diaphragm Set, Plunger Assembly	98
Repair Kit : Oring Set, Diaphragm Set, Plunger Assembly, Fastener, Springs, Guide Assembly	99
Solenoid Kit : Solenoid, Gasket	34

APPROVAL

(* applied for)

Approval	TYPE 4X, 6P	IP67	Ex d IIC T4 or T5 or T6 IP66	Ex ia IIC T6 IP67	DGMS	CCOE
		✓	✓	✓	✓	✓
CE						
UL						
CEPEL						
EAC						
IECEx						

Contact Rotex for any other ambient, fluid temperature, media and application

⚠ OIL Media Temperature Restricted from 0 °C to 100 °C

ROTEX
Engineering For The Future

2/2 DIRECT ACTING, HIGH ORIFICE NORMALLY CLOSED SOLENOID VALVE

SPECIFICATION

PORT CONNECTION			PRE-SSURE bar						BODY MATERIAL AND INTERNALS				SEALS					MANUAL OVERRIDE			SOLENOID ENCLOSURE						SUFFIX		POWER VA			
																					WEATHER PROOF			EXPLOSION PROOF							CONSTRUCTION REFERENCE NUMBER
SIZE	BSP(F)	NPT(F)	MINIMUM	MAXIMUM	ORIFICE (mm)	FLOW FACTOR kv (LPM OF WATER @ 1 bar ΔP)	VALVE TYPE	PILOT PRESSURE	ALUMINIUM	CF8M & SS316	BRASS	CF8 & SS316	NBR	Viton	EPDM	HYTREL	PTFE	NIL	STAYPUT CUM MOMENTARY	MOMENTARY	FLYING LEAD	PLUG IN, IP67	SQ. PLUG IN, IP67	TERMINAL BOX IP67	EXPLOSION PROOF IIC,IP67	LARGE ENCLOSURE	SOLENOID SIZE	OXYGEN	AMONIA	AC INRUSH	AC HOLDING	DC	
2/2 NORMALLY CLOSED																																
1/2"	4G	4R	0	10	12	50	20172V02			B12		B13	S0	S2				※						T	E		18	✓	✓	30	30	30	15
3/4"	6G	6R	0	10	20	95	20172V02			B12		B13	S0	S2				※						T	E		18	✓	✓	30	30	30	20
1"	8G	8R	0	10	25	160	20172V02			B12		B13	S0	S2				※						T	E		18	✓	✓	30	30	30	20
11/2"	12G	12R	0	10	40	350	20172V03			B12		B13	S0	S2				※						T	E		18	✓	✓	30	30	30	30
1/2"	4G	4R	0	5	12	50	20172V02LP			B12		B13	S0	S2				※					25	T	E		18	✓	✓	20	20	15	15
3/4"	6G	6R	0	5	20	95	20172V02LP			B12		B13	S0	S2				※					25	T	E		18	✓	✓	20	20	15	20
1"	8G	8R	0	5	25	160	20172V02LP			B12		B13	S0	S2				※					25	T	E		18	✓	✓	20	20	15	20
11/2"	12G	12R	0	5	40	350	20172V03LP			B12		B13	S0	S2				※					25	T	E		18	✓	✓	20	20	15	30
2"	16G	16R	0	5	50	560	20172V02LP			B12		B13	S0	S2				※					25	T	E		18	✓	✓	20	20	15	30

SOLENOID 18		
Cable Entry	T	E
		Ex d / Ex emb
M20 x 1.5	19 17 MS 39	87 MS / 58 MS 58 LT MS
M25 x 1.5	17	87 / 58 / 58 LT
1/2" NPT	16 17 NS 37	87 NS / 58 NS 58 LT NS

※ = Do not specify when opted for. Refer Page # 22 for Value of ※
✓= Options available

ORDERING CODE AND EXAMPLE

VALVE + SOLENOID

VALVETYPE – SUFFIX – ORIFICE – PORT CONNECTION – BODY AND INTERNALS – SEAL - MEDIA + SIZE – VOLTAGE – CURRENT – SOLENOID ENCLOSURE – SPECIALVERSION – POWER – INSULATION – APPROVAL

e.g. 20172V02-25-8G-B12-S0+II-24V-DC-16-LW30;20172V02-12-4G-B13-S2+II-230V-AC/DC-19-FR-LW30-H

DIMENSIONS

All Dimensions are in mm

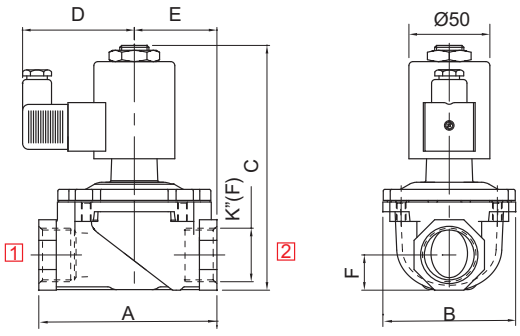

SQUARE PLUG IN SOLENOID TYPE 25

NW	K (PORT SIZE)	A	B	C	D	E	F	CONST. REF.
VALVE TYPE : 20172V02/20172V03/20172V02LP								
12	1/2", 3/8", 1/4"	65	50	124	66	29	15	29
20	3/4"	84	64	137	66	42	17	30
25	1"	110	93	142	66	51	25	31
40	11/2"	135	94	157	68	68	30	32A

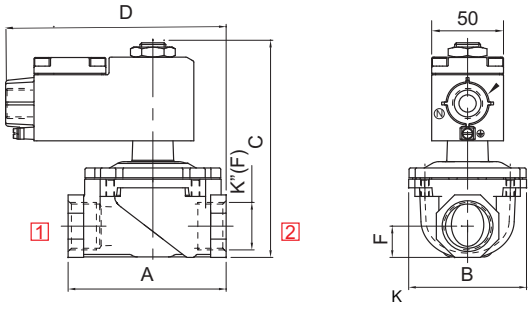

TERMINAL BOX/ Ex d LARGE ENCLOSURE, TYPE 16, 19, 37, 39,58,58LT,LC

NW	K (PORT SIZE)	A	B	C	D	E	F	CONST. REF.
VALVE TYPE : 20172V02/20172V03/20172V02LP								
12	1/2", 3/8", 1/4"	65	50	124	132	00	15	29
20	3/4"	84	64	137	132	00	17	30
25	1"	110	82	142	132	00	25	31
40	11/2"	135	94	157	132	00	30	
50	2"	165	140	190	132	00	38	32

Plug In Coil type 25 can be supplied only for 'DC' Voltages.

Specifications are subject to change without notice.

2/2 DIAPHRAGM OPERATED, NORMALLY CLOSED GENERAL PURPOSE SOLENOID VALVE

TYPE	PRESSURE

TYPE	PRESSURE

TYPE	PRESSURE
209	0.5 - 10 bar

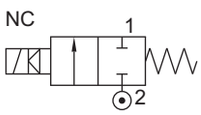



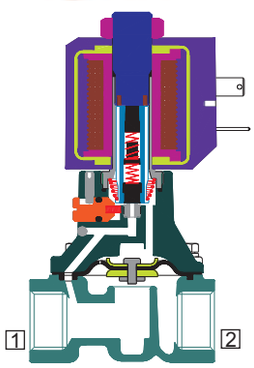

THIS MODEL IS DISCONTINUED.
OFFER ALTERNATE MODEL 24101.
CONTACT ROTEX IF MUST TO OFFER SPECIFIC

2/2 DIAPHRAGM OPERATED “L” PORT SOLENOID VALVE

TYPE	PRESSURE

TYPE	PRESSURE

TYPE	PRESSURE

NC

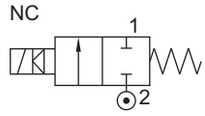



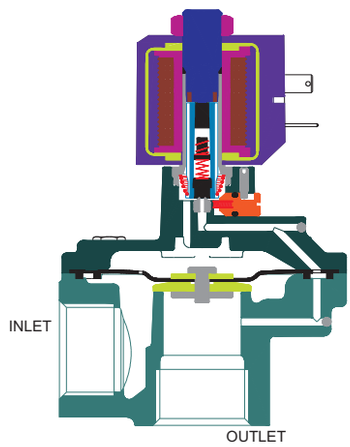

6

THIS MODEL IS DISCONTINUED.

CONTACT ROTEX IF MUST TO OFFER SPECIFIC

2/2 POPPET TYPE, INTERNAL/ EXTERNAL PILOT, NC/ NO SOLENOID VALVE

TYPE	PRESSURE
22101	0 - 20 bar

NC

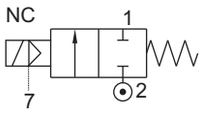

TYPE	PRESSURE
21201	0.7 - 10 bar
21202	1 - 20 bar
21203	2 - 40 bar

NO

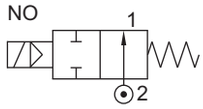

TYPE	PRESSURE
21101	0.7 - 10 bar
21102	1 - 20 bar
21103	2 - 40 bar

NC

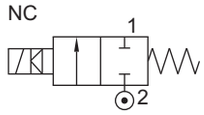

FEATURES

- Bubble tight shut off
- Vibration resistance up to 9g
- Suitable for high speed cycling
- Speed up to 400 cycles/ min
- Life >10 million cycles



WETTED PARTS

Code	B2	B12	B13
Body	CF8	CF8M	CF8
Internals	BRASS	SS316	SS316
Guide Assembly	SS 304		
Shadow-Ring	Copper/ Silver/ None		
Plunger, Insert	SS 430		
Spring	SS 302		
Seat, Seals	NBR, Viton, EPDM		
Fasteners	SS 304		

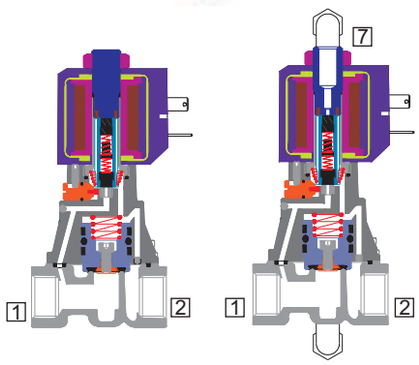

AMBIENT AND FLUID TEMPERATURE

-30 °C to 75 °C

SPECIAL VERSION AND SUFFIX

Suffix : (Valve) AM, LC
Special version : (Solenoid) CO, FR, SS, LC, III, TM

MEDIA

Air, Inert Gases, Water, Free Flowing
Liquid, Oil, Diesel, Kerosene, LPG

APPLICATION

High ON/ OFF Cycles

PORT CONNECTION

ACTION	INLET	OUTLET	EXTERNAL PILOT INLET
NC	2	1	7
NO	2	1	

Contact Rotex for
- Any other ambient, fluid temperature, media and application
- UL listed, c(UL) Listed general purpose Valve
- PED approved valve Orifice 25mm & Higher

SPARES (Refer page 25 for ordering code)

SPARE KIT	CODE
Seal Kit : Oring Set and Plunger Assembly	98
Repair Kit : Oring Set, Plunger Assembly, Springs, Manual Override, Piston Kit, Guide Assembly	99
Solenoid Kit : Solenoid, Gasket	34

APPROVAL (* applied for)

Approval	TYPE 4X, 6P	IP67	Ex d IIC T4 or T5 or T6 IP66	Ex ia IIC T6 IP67	DGMS	CCOE
ISI		✓	✓	✓	✓	✓
CE		✓	✓	✓		
UL	✓		*			
CMRI			✓	✓		
EAC			✓	✓		
IECEx			✓	✓		

For Valve type 22101 External pilot pressure should be minimum 2 bar or ≥ Main pressure whichever is higher.
OIL Media Temperature Restricted from 0 °C to 100 °C

ROTEX
Engineering For The Future

2/2 POPPET TYPE, INTERNAL/ EXTERNAL PILOT, NC/ NO SOLENOID VALVE

SPECIFICATION

PORT CONNECTION			PRE-SSURE bar						BODY MATERIAL AND INTERNALS			SEALS					MANUAL OVERRIDE			SOLENOID ENCLOSURE							SUFFIX		POWER VA			CONSTRUCTION REFERENCE NUMBER
																				WEATHER PROOF				EXPLOSION PROOF								
SIZE	BSP(F)	NPT(F)	MINIMUM	MAXIMUM	ORIFICE (mm)	FLOW FACTOR kv (LPM OF WATER @ 1 bar ΔP)	VALVE TYPE	PILOT PRESSURE	CF8M & SS316	BRASS	CF8 & SS316	NBR	Viton	EPDM	HYTREL	PTFE	NIL	STAYPUT CUM MOMENTARY	MOMENTARY	FLYING LEAD	PLUG IN, IP67	SQ. PLUG IN, IP67	TERMINAL BOX IP67	EXPLOSIONPROOF IIC,IP67	LARGE ENCLOSURE	SOLENOID SIZE	OXYGEN	AMMONIA	AC INRUSH	AC HOLDING	DC	
2/2 NORMALLY CLOSED																															
1/2"	4G	4R	0.7	10	12	60	21101		B12	B2	B13	※	S2	S1			M0	※	M8	F	22	25	T	E	III	14		✓	18	12	8	57
			1	20	12	60	21102		B12	B2	B13	※	S2	S1			M0	※	M8	F	22	25	T	E	III	14		✓	18	12	8	57
			0	20	12	60	22101	2-20	B12	B2	B13	※	S2	S1			M0	※	M8	F	22	25	T	E	III	14		✓	18	12	8	57
			2	40	12	60	21103V01		B12	B2	B13	※	S2	S1			※			F	22	25	T	E	III	14		✓	18	12	8	57
3/4"	6G	6R	0.7	10	20	110	21101		B12	B2	B13	※	S2	S1			M0	※	M8	F	22	25	T	E	III	14		✓	18	12	8	58
			1	20	20	110	21102		B12	B2	B13	※	S2	S1			M0	※	M8	F	22	25	T	E	III	14		✓	18	12	8	58
			0	20	20	110	22101	2-20	B12	B2	B13	※	S2	S1			M0	※	M8	F	22	25	T	E	III	14		✓	18	12	8	58
			2	40	20	110	21103V01		B12	B2	B13	※	S2	S1			※			F	22	25	T	E	III	14		✓	18	12	8	58
1"	8G	8R	0.7	10	25	185	21101V01		B12	B2	B13	※	S2	S1			M0	※	M8	F	22	25	T	E	III	14		✓	18	12	8	59
			1	20	25	185	21102V01		B12	B2	B13	※	S2	S1			M0	※	M8	F	22	25	T	E	III	14		✓	18	12	8	59
			0	20	25	185	22101V01	2-20	B12	B2	B13	※	S2	S1			M0	※	M8	F	22	25	T	E	III	14		✓	18	12	8	59
			2	40	25	185	21103V01		B12	B2	B13	※	S2	S1			※			F	22	25	T	E	III	14		✓	18	12	8	59
11/4"	10G	10R	0.7	10	40	400	21101		B12	B2	B13	※	S2	S1			M0	※	M8	F	22	25	T	E	III	14		✓	18	12	8	60
			1	20	40	400	21102		B12	B2	B13	※	S2	S1			M0	※	M8	F	22	25	T	E	III	14		✓	18	12	8	60
			0	20	40	400	22101	2-20	B12	B2	B13	※	S2	S1			M0	※	M8	F	22	25	T	E	III	14		✓	18	12	8	60
			2	40	40	400	21103V01		B12	B2	B13	※	S2	S1			※			F	22	25	T	E	III	14		✓	18	12	8	60
11/2"	12G	12R	0.7	10	40	440	21101		B12	B2	B13	※	S2	S1			M0	※	M8	F	22	25	T	E	III	14		✓	18	12	8	61
			1	20	40	440	21102		B12	B2	B13	※	S2	S1			M0	※	M8	F	22	25	T	E	III	14		✓	18	12	8	61
			0	20	40	440	22101	2-20	B12	B2	B13	※	S2	S1			M0	※	M8	F	22	25	T	E	III	14		✓	18	12	8	61
			2	40	40	440	21103V01		B12	B2	B13	※	S2	S1			※			F	22	25	T	E	III	14		✓	18	12	8	61
2"	16G	16R	0.7	10	50	650	21101V01		B12	B2	B13	※	S2	S1			M0	※	M8	F	22	25	T	E	III	14		✓	18	12	8	62
			1	20	50	650	21102V01		B12	B2	B13	※	S2	S1			M0	※	M8	F	22	25	T	E	III	14		✓	18	12	8	62
			0	20	50	650	22101V01	2-20	B12	B2	B13	※	S2	S1			M0	※	M8	F	22	25	T	E	III	14		✓	18	12	8	62
			2	40	50	650	21103V01		B12	B2	B13	※	S2	S1			※			F	22	25	T	E	III	14		✓	18	12	8	62
2/2 NORMALLY OPEN																															
1/2"	4G	4R	0.7	10	12	60	21201		B12	B2	B13	※	S2	S1			M0	※	M8	F	22	25	T	E	III	14		✓	18	12	8	63
			1	20	12	60	21202		B12	B2	B13	※	S2	S1			M0	※	M8	F	22	25	T	E	III	14		✓	18	12	8	63
			2	40	12	60	21203V01		B12	B2	B13	※	S2	S1			※			F	22	25	T	E	III	14		✓	18	12	8	63
3/4"	6G	6R	0.7	10	20	110	21201		B12	B2	B13	※	S2	S1			M0	※	M8	F	22	25	T	E	III	14		✓	18	18	8	64
			1	20	20	110	21202		B12	B2	B13	※	S2	S1			M0	※	M8	F	22	25	T	E	III	14		✓	18	18	8	64
			2	40	20	110	21203V01		B12	B2	B13	※	S2	S1			※			F	22	25	T	E	III	14		✓	18	12	8	64
1"	8G	8R	0.7	10	25	185	21201V01		B12	B2	B13	※	S2	S1			M0	※	M8	F	22	25	T	E	III	14		✓	18	18	8	65
			1	20	25	185	21202V01		B12	B2	B13	※	S2	S1			M0	※	M8	F	22	25	T	E	III	14		✓	18	12	8	65
			2	40	25	185	21203V01		B12	B2	B13	※	S2	S1			※			F	22	25	T	E	III	14		✓	18	12	8	65
11/4"	10G	10R	0.7	10	40	400	21201		B12	B2	B13	※	S2	S1			M0	※	M8	F	22	25	T	E	III	14		✓	18	18	8	66
			1	20	40	400	21202		B12	B2	B13	※	S2	S1			M0	※	M8	F	22	25	T	E	III	14		✓	18	18	8	66
			2	40	40	400	21203V01		B12	B2	B13	※	S2	S1			※			F	22	25	T	E	III	14		✓	18	12	8	66
11/2"	12G	12R	0.7	10	40	440	21201		B12	B2	B13	※	S2	S1			M0	※	M8	F	22	25	T	E	III	14		✓	18	12	8	67
			1	20	40	440	21202		B12	B2	B13	※	S2	S1			M0	※	M8	F	22	25	T	E	III	14		✓	18	12	8	67
			2	40	40	440	21203V01		B12	B2	B13	※	S2	S1			※			F	22	25	T	E	III	14		✓	18	12	8	67
2"	16G	16R	0.7	10	50	650	21201V01		B12	B2	B13	※	S2	S1			M0	※	M8	F	22	25	T	E	III	14		✓	18	12	8	68
			1	20	50	650	21202V01		B12	B2	B13	※	S2	S1			M0	※	M8	F	22	25	T	E	III	14		✓	18	12	8	68
			2	40	50	650	21203V01		B12	B2	B13	※	S2	S1			※			F	22	25	T	E	III	14		✓	18	12	8	68

| SOLENOID 14 | | | | | | | | | | | | | | | | | | |

2/2 POPPET TYPE, INTERNAL/ EXTERNAL PILOT, NC/ NO SOLENOID VALVE

ORDERING CODE VALVE + SOLENOID

VALVE TYPE - SUFFIX - ORIFICE - PORT CONNECTION - BODY & INTERNALS - MANUA
SIZE - VOLTAGE - CURRENT - SOLENOID ENCLOSURE - SPECIAL VERSION - POWER -
e.g. 21101-12-4G+I-12V-DC-22; 21101-20-6R-B2+III-110V-DC-16-H

DIMENSIONS

All Dimensions are in mm

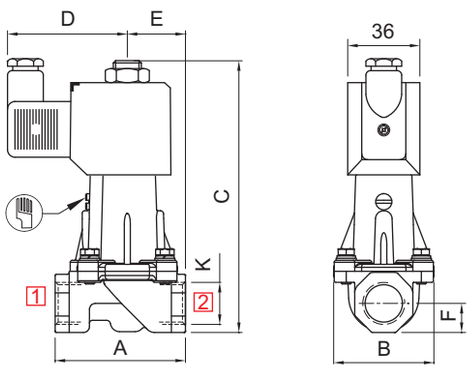

PLUG IN SOLENOID TYPE 22

NW	K (PORT SIZE)	A	B	C	D	E	F	CONST. REF.
VALVE TYPE : 21101, 21102, 22101								
12	1/2", 3/8", 1/4"	65	50	140	60	29	15	57
20	1/2"	84	64	152	60	42	17	58
20	3/4"	84	64	152	60	42	17	58
25	1"	110	95	174	60	51	25	59
40	11/4"	135	94	191	60	66	30	60
40	11/2"	135	94	191	60	66	30	61
50	2"	165	170	215	60	76	38	62

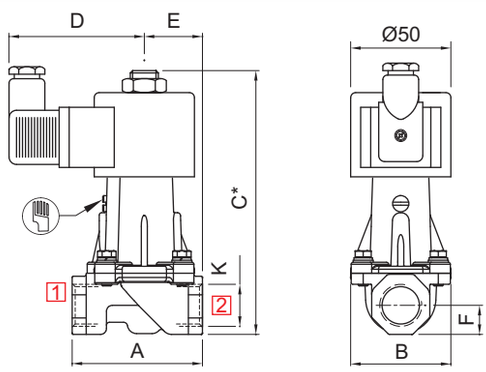

SQUARE PLUG IN SOLENOID TYPE 25

NW	K (PORT SIZE)	A	B	C*	D	E	F	CONST. REF.
VALVE TYPE : 21101, 21102, 21103*, 22101								
12	1/2", 3/8", 1/4"	65	50	140	68	29	15	57
20	1/2"	84	64	152	68	42	17	58
20	3/4"	84	64	152	68	42	17	58
25	1"	110	95	174	68	51	25	59
40	11/4"	135	94	191	68	66	30	60
40	11/2"	135	94	191	68	66	30	61
50	2"	165	170	215	68	76	38	62

*C = C+ 20 FOR VALVE TYPE 21103

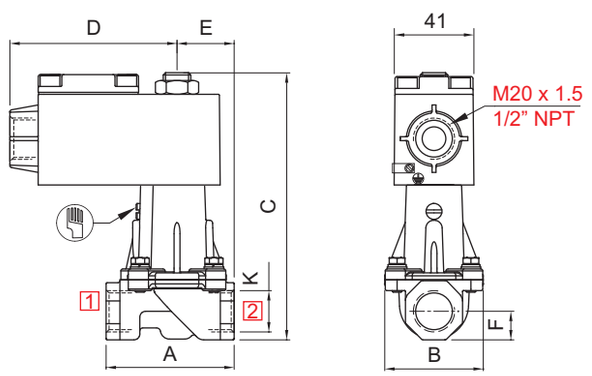

TERMINAL BOX/ Ex d ENCLOSURE, TYPE 16, 19, 37, 39, 58, 58LT

NW	K (PORT SIZE)	A	B	C	D	E	F	CONST. REF.
VALVE TYPE : 21101, 21102, 22101								
12	1/2", 3/8", 1/4"	65	50	140	85	29	15	57
20	1/2"	84	64	152	85	42	17	58
20	3/4"	84	64	152	85	42	17	58
25	1"	110	95	174	85	51	25	59
40	11/4"	135	94	191	85	66	30	60
40	11/2"	135	94	191	85	66	30	61
50	2"	165	170	215	85	76	38	62

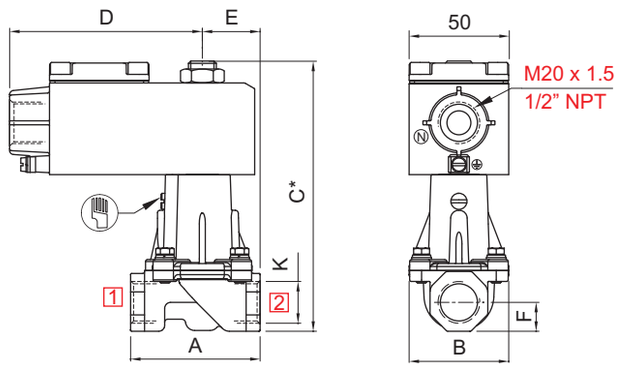

TERMINAL BOX/ Ex d LARGE ENCLOSURE, TYPE 16, 19, 37, 39, 58, 58LT, LC

NW	K (PORT SIZE)	A	B	C*	D	E	F	CONST. REF.
VALVE TYPE : 21101, 21102, 21103*, 21202								
12	1/2", 3/8", 1/4"	65	50	140	97	29	15	57
20	1/2"	84	64	152	97	42	17	58
20	3/4"	84	64	152	97	42	17	58
25	1"	110	95	174	97	51	25	59
40	11/4"	135	94	191	97	66	30	60
40	11/2"	135	94	191	97	66	30	61
50	2"	165	170	215	97	76	38	62

*C = C+ 20 FOR VALVE TYPE 21103

Specifications are subject to change without notice.

ROTEX
Engineering For The Future

2/2 POPPET TYPE, INTERNAL/ EXTERNAL PILOT, NC/ NO SOLENOID VALVE

DIMENSIONS

All Dimensions are in mm

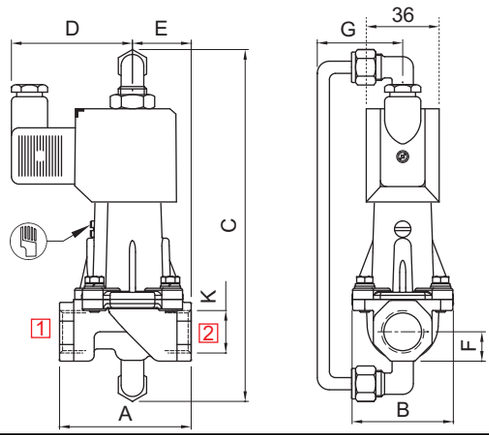

PLUG IN SOLENOID TYPE 22

NW	K (PORT SIZE)	A	B	C	D	E	F	G	CONST. REF.
VALVE TYPE : 21201, 21202, 21203*									
12	1/2", 3/8", 1/4"	65	50	140	82	00	15	42	63
20	1/2"	84	64	152	82	00	17	48	64
20	3/4"	84	64	152	82	00	17	48	64
25	1"	110	95	174	82	00	25	61	65
40	11/4"	135	94	191	82	00	30	61	66
40	11/2"	135	94	191	82	00	30	61	67
50	2"	165	170	215	123	00	38	101	68

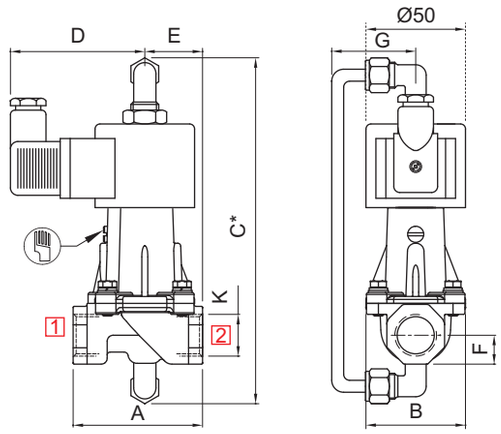

SQUARE PLUG IN SOLENOID TYPE 25

NW	K (PORT SIZE)	A	B	C*	D	E	F	G	CONST. REF.
VALVE TYPE : 21201									
12	1/2", 3/8", 1/4"	65	50	140	93	00	15	42	63
20	1/2"	84	64	152	93	00	17	48	64
20	3/4"	84	64	152	93	00	17	48	64
25	1"	110	95	174	93	00	25	61	65
40	11/4"	135	94	191	93	00	30	61	66
40	11/2"	135	94	191	93	00	30	61	67
50	2"	165	170	215	93	00	38	101	68

***C = C+ 20 FOR VALVE TYPE 21203**

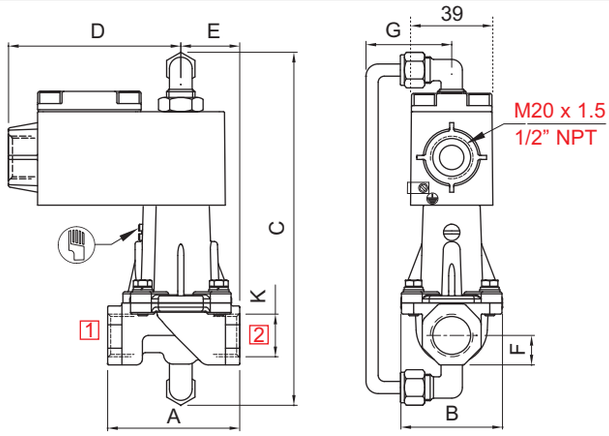

TERMINAL BOX/ Ex d ENCLOSURE, TYPE 16, 19, 37, 39, 58, 58LT

NW	K (PORT SIZE)	A	B	C	D	E	F	G	CONST. REF.
VALVE TYPE : 21201, 21202									
12	1/2", 3/8", 1/4"	65	50	140	116	00	15	42	63
20	1/2"	84	64	152	116	00	17	48	64
20	3/4"	84	64	152	116	00	17	48	64
25	1"	110	95	174	116	00	25	61	65
40	11/4"	135	94	191	116	00	30	61	66
40	11/2"	135	94	191	116	00	30	61	67
50	2"	165	170	215	116	00	38	101	68

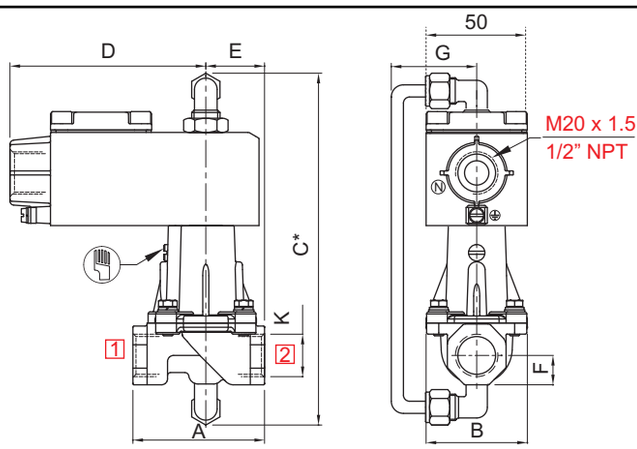

TERMINAL BOX/ Ex d LARGE ENCLOSURE, TYPE 16, 19, 37, 39, 58, 58LT, LC

NW	K (PORT SIZE)	A	B	C*	D	E	F	G	CONST. REF.
VALVE TYPE : 21201, 21202, 21203*									
12	1/2", 3/8", 1/4"	65	50	140	123	00	15	42	63
20	1/2"	84	64	152	123	00	17	48	64
20	3/4"	84	64	152	123	00	17	48	64
25	1"	110	95	174	123	00	25	61	65
40	11/4"	135	94	191	123	00	30	61	66
40	11/2"	135	94	191	123	00	30	61	67
50	2"	165	170	215	123	00	38	101	68

***C = C+ 20 FOR VALVE TYPE 21203**

Specifications are subject to change without notice.

2/2 ISOLATED PISTON, EXTERNAL AIR OPERATED, NC/ NO SOLENOID VALVE

TYPE	PRESSURE

TYPE	PRESSURE
23203	0 - 20 bar

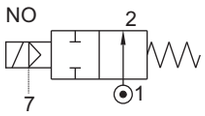

TYPE	PRESSURE
23103	0 - 20 bar

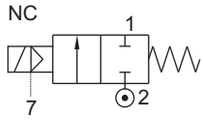

FEATURES

- Bubble tight shut off
- Vibration resistance up to 9g
- Suitable for high speed cycling
- Speed up to 400 cycles/ min
- Life >10 million cycles



WETTED PARTS

Code	※	B18	
Body	Powder Coated Die Cast Aluminium	CF8M Aluminium	
Internals	Aluminium and Brass	Brass SS 316	
Guide Assembly	SS 304		
Shadow-Ring	Copper/ Silver/ None		
Plunger, Insert	SS 430		
Spring	SS 302		
Seat, Seals	NBR, Viton		
Fasteners	SS 304		

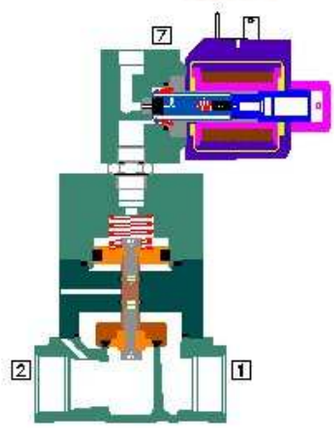

AMBIENT AND FLUID TEMPERATURE

-30 °C to 75 °C

SPECIAL VERSION AND SUFFIX

Suffix : (Valve) OX, AM
Special version : (Solenoid) CO, FR, SS, LC, III, TM

MEDIA

Air, Inert Gases, Water, Vacuum, Free Flowing Liquid, Oil, Diesel, Kerosene, LPG, Furnace Oil

APPLICATION

Fuel line shut off, Vacuum Breaking

PORT CONNECTION

ACTION	INLET	OUTLET	EXTERNAL PILOT
NC	2	1	7
NO	1	2	7

SPARES (Refer page 25 for ordering code)

SPARE KIT	CODE
Seal Kit : Oring Set and Plunger Assembly	98
Repair Kit : Oring Set, Plunger Assembly, Springs, Manual Override, Guide Assembly Piston Kit	99
Solenoid Kit : Solenoid, Gasket	34

APPROVAL (* applied for)

Approval	TYPE 4X, 6P	IP67	Ex d IIC T4 or T5 or T6 IP66	Ex ia IIC T6 IP67	DGMS	CCOE
		✓	✓	✓	✓	✓
CE		✓	✓	✓		
UL	✓		*			
CCPEL			✓	✓		
PESO			✓	✓		
IECEx			✓	✓		

Contact Rotex for
- Any other ambient, fluid temperature, media and application
- UL listed, c UL Listed general purpose Valve

External Pilot pressure should be minimum 2 bar or ≥ main fluid pressure whichever is higher.
OIL Media Temperature Restricted from 0 °C to 100 °C

ROTEX
Engineering For The Future

2/2 ISOLATED PISTON, EXTERNAL AIR OPERATED, NC/ NO SOLENOID VALVE

SPECIFICATION

PORT CONNECTION			PRE-SSURE bar		ORIFICE (mm)	FLOW FACTOR kv (LPM OF WATER @ 1 bar ΔP)	VALVE TYPE	PILOT PRESSURE	BODY MATERIAL AND INTERNALS			SEALS					MANUAL OVERRIDE			SOLENOID ENCLOSURE							SUFFIX		POWER VA			CONSTRUCTION REFERENCE NUMBER
																			WEATHER PROOF				EXPLOSION PROOF								
SIZE	BSP(F)	NPT(F)	MINIMUM	MAXIMUM					SS+Aluminium	BRASS	CF8M /Aluminium	NBR	Viton	EPDM	HYTREL	PTFE	NIL	STAYPUT CUM MOMENTARY	MOMENTARY	FLYING LEAD	PLUG IN, IP67	SQ. PLUG IN, IP67	TERMINAL BOX IP67	EXPLOSION PROOF IIC, IP67	LARGE ENCLOSURE	SOLENOID SIZE	OXYGEN	AMMONIA	AC INRUSH	AC HOLDING	DC	
2/2 NORMALLY CLOSED																															
1/2"	4G	4R	0	20	12	60	23103	2-20	※		B18	※	S2				M0	※	M8	F	22	25	T	E	III	14	✓	✓	18	12	8	69
3/4"	6G	6R	0	20	20	110	23103	2-20	※		B18	※	S2				M0	※	M8	F	22	25	T	E	III	14	✓	✓	18	12	8	70
1"	8G	8R	0	20	25	185	23103V01	2-20	※		B18	※	S2				M0	※	M8	F	22	25	T	E	III	14	✓	✓	18	12	8	71
2/2 NORMALLY OPEN																															
1/2"	4G	4R	0	20	12	60	23203	2-20	※		B18	※	S2				M0	※	M8	F	22	25	T	E	III	14	✓	✓	18	12	8	69
3/4"	6G	6R	0	20	20	110	23203	2-20	※		B18	※	S2				M0	※	M8	F	22	25	T	E	III	14	✓	✓	18	12	8	70
1"	8G	8R	0	20	25	185	23203V01	2-20	※		B18	※	S2				M0	※	M8	F	22	25	T	E	III	14	✓	✓	18	12	8	71

| SOLENOID 14 | | | | | | | | | | | | | | | | | | |

2/2 ISOLATED PISTON, EXTERNAL AIR OPERATED BI-DIRECTIONAL, NC/ NO SOLENOID VALVE

TYPE	PRESSURE

TYPE	PRESSURE
23204	0 - 10 bar

NO

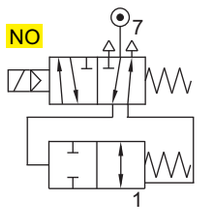

TYPE	PRESSURE
23104	0 - 10 bar

NC

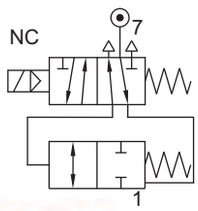

FEATURES

- Bubble tight shut off
- Vibration resistance up to 9g
- Suitable for high speed cycling
- Speed up to 400 cycles/ min
- Life >10 million cycles
- Suitable for vacuum up to 10^{-6} torr



WETTED PARTS

Code	※	B18	
Body	Aluminium/ Cast CF8M	CF8M Aluminium	
Internals	Aluminium and Brass	Brass SS 316	
Guide Assembly	SS 304		
Shadow-Ring	Copper/ Silver/ None		
Plunger, Insert	SS 430		
Spring	SS 302		
Seat, Seals	NBR, Viton		
Fasteners	SS 304		

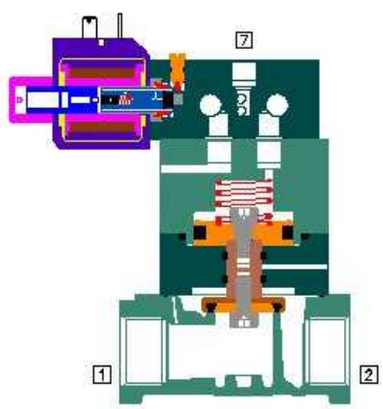

AMBIENT AND FLUID TEMPERATURE

-30 °C to 75 °C

SPECIAL VERSION AND SUFFIX

Suffix : (Valve) OX, AM
Special version : (Solenoid) CO, FR, SS, LC, III, TM

MEDIA

Air, Inert Gases, Water, Vacuum, Free Flowing Liquid, Oil, Diesel, Kerosene, LPG, Furnace Oil

APPLICATION

Ideally suited for application where flow is expected to pass through valve in bi-direction. Vacuum breaking

PORT CONNECTION

ACTION	INLET	OUTLET	PILOT INLET
NC	2 or 1	1or 2	7
NO	2 or 1	1or 2	7

Contact Rotex for
- Any other ambient, fluid temperature, media and application
- UL listed, c(UL) Listed general purpose Valve

SPARES (Refer page 25 for ordering code)

SPARE KIT	CODE
Seal Kit : Oring Set, Plunger Assembly	98
Repair Kit : Oring Set, Plunger Assembly, Springs, Manual Override, Piston Kit Guide Assembly	99
Solenoid Kit : Solenoid, Gasket	34

APPROVAL (* applied for)

Approval	TYPE 4X, 6P	IP67	Ex d IIC T4 or T5 or T6 IP66	Ex ia IIC T6 IP67	DGMS	CCOE
ISI		✓	✓	✓	✓	✓
CE		✓	✓	✓		
UL	✓		*			
CMRI			✓	✓		
PESO			✓	✓		
IECEx			✓	✓		

External pilot pressure should be minimum 2 bar or ≥ main fluid pressure which ever is higher
OIL Media Temperature Restricted from 0 °C to 100 °C

ROTEX
Engineering For The Future

2/2 ISOLATED PISTON, EXTERNAL AIR OPERATED BI-DIRECTIONAL, NC/ NO SOLENOID VALVE

SPECIFICATION

PORT CONNECTION			PRE-SSURE bar		ORIFICE (mm)	FLOW FACTOR kv (LPM OF WATER @ 1 bar ΔP)	VALVE TYPE	PILOT PRESSURE	BODY MATERIAL AND INTERNALS			SEALS					MANUAL OVERRIDE			SOLENOID ENCLOSURE							SUFFIX		POWER VA			CONSTRUCTION REFRENCE NUMBER
																			WEATHER PROOF				EXPLOSION PROOF								
SIZE	BSP(F)	NPT(F)	MINIMUM	MAXIMUM					SS+Aluminium	BRASS	CF8M /Aluminium	NBR	Viton	EPDM	HYTREL	PTFE	NIL	STAYPUT CUM MOMENTARY	MOMENTARY	FLYING LEAD	PLUG IN, IP67	SQ. PLUG IN, IP67	TERMINAL BOX IP67	EXPLOSION PROOF IIC, IP67	LARGE ENCLOSURE	SOLENOID SIZE	OXYGEN	AMONIA	AC INRUSH	AC HOLDING	DC	
2/2 NORMALLY CLOSED																															
1/2"	4R	4G	0	12	12	60	23104	2-12	※		B18	※	S2				M0	※	M8	F	22	25	T	E	III	14	✓	✓	18	12	8	74
3/4"	6R	6G	0	12	20	110	23104	2-12	※		B18	※	S2				M0	※	M8	F	22	25	T	E	III	14	✓	✓	18	12	8	75
1"	8R	8G	0	12	25	185	23104V01	2-12	※		B18	※	S2				M0	※	M8	F	22	25	T	E	III	14	✓	✓	18	12	8	76
2/2 NORMALLY OPEN																															
1/2"	4R	4G	0	12	12	60	23204	2-12	※		B18	※	S2				M0	※	M8	F	22	25	T	E	III	14	✓	✓	18	12	8	74
3/4"	6R	6G	0	12	20	110	23204	2-12	※		B18	※	S2				M0	※	M8	F	22	25	T	E	III	14	✓	✓	18	12	8	75
1"	8R	8G	0	12	25	185	23204V01	2-12	※		B18	※	S2				M0	※	M8	F	22	25	T	E	III	14	✓	✓	18	12	8	76

SOLENOID 14		
Cable Entry	T	E
		Ex d / Ex a / Ex emb
M20 x 1.5	19 17 MS	39 / 87 MS / 66 MS / 58 MS / 58 LT MS
M25 x 1.5	17	87 / 66 / 58 / 58 LT
1/2" NPT	16 17 NS	37 / 87 NS / 66 NS / 58 NS / 58 LT NS

	F
Flying lead IP54	※
Flying lead IP67	01

※ = Do not specify when opted for. Refer Page # 22 for Value of ※
✓= Options available
* Valve type printed in red colour is external pilot air/ air operated valve

ORDERING CODE AND EXAMPLE

VALVE + SOLENOID

VALVE TYPE– SUFFIX – ORIFICE – PORT CONNECTION – BODY AND INTERNALS – MANUAL OVERRIDE – SEAL - MEDIA + SIZE – VOLTAGE - CURRENT – SOLENOID ENCLOSURE – SPECIAL VERSION – POWER – INSULATION – APPROVAL

e.g. 23104V01-25-8G+I-220V 50Hz-22; 23104-20-6R-B18-S2-M8+III-24V DC-25

DIMENSIONS

All Dimensions are in mm

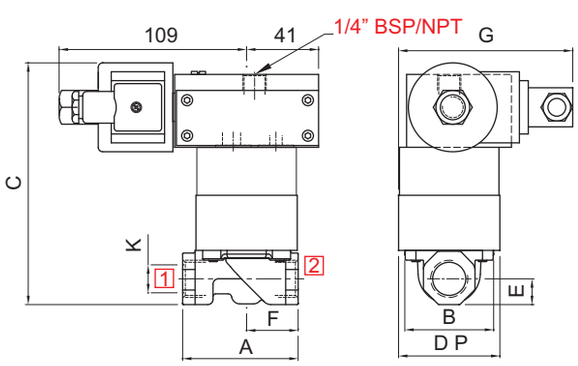

PLUG IN SOLENOID TYPE 22/ 25

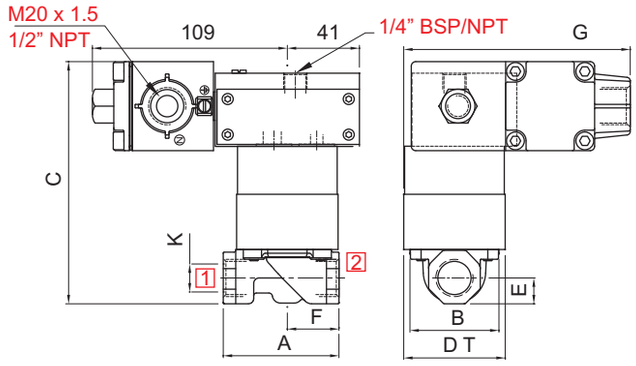

TERMINAL BOX/ EX d/ LARGE ENCLOSURE, TYPE 16, 19, 37, 39, 58, 58LT

NW	K (PORT SIZE)	A	B	C	D P	E	F	G	CONST. REF.	G
VALVE TYPE : 23104, 23204										
12	1/2"	65	50	136	57	15	29	98	127	74
20	3/4"	84	64	157	63	17	42	102	131	75
25	1"	110	95	179	80	25	52	118	147	76

Specifications are subject to change without notice.

2/2 AIR OPERATED VALVE

TYPE	PRESSURE

TYPE	PRESSURE

TYPE	PRESSURE
23101	0 - 20 bar

NC

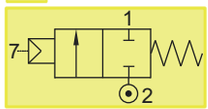

FEATURES

- Bubble tight shut off
- Mounts in any position
- Vibration resistance up to 9g
- Suitable for high speed cycling
- Speed up to 300 cycles/ min.
- Life >10 million cycles



WETTED PARTS

Code	B2	B12	B13
Body	CF8	CF8M	CF8
Internals	BRASS	SS316	SS316
Spring	SS 302		
Fasteners	SS 304		
Seat, Seals	NBR, Viton		

※ Do not specify code if opted for. Refer Page # 22 for Value of ※

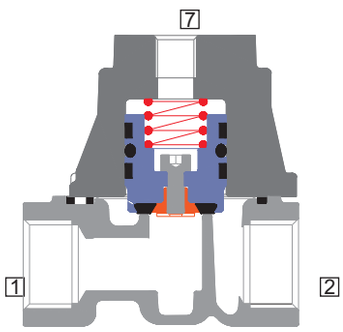

AMBIENT AND FLUID TEMPERATURE

-30 °C to 75 °C

MEDIA

Air, Inert Gases, Water, Free Flowing Liquid,
Oil, Diesel, Kerosene

APPLICATION

Can be used as 2/2 NC by using 3/2 NO Pilot

PORT CONNECTION

INLET	OUTLET	PILOT INLET
2	1	7

SPARES (Refer page 25 for ordering code)

SPARE KIT	CODE
Seal Kit : Oring Set	98
Repair Kit : Oring Set, Fastener, Springs	99

Contact Rotex for
- Any other ambient, fluid temperature, media and application
- PED approved valve

The External Air Pressure should be minimum 2 bar or ≥ main fluid pressure whichever is higher.
- NOTE : USE 3/2 NO PILOT FOR USING THIS VALVE AS NC OR
  USE 3/2 NC PILOT FOR USING THIS VALVE AS NO

OIL Media Temperature Restricted from 0 °C to 100 °C

Specifications are subject to change without notice.

ROTEX
Engineering For The Future

2/2 AIR OPERATED VALVE

SPECIFICATION

PORT CONNECTION			PRE-SSURE bar		ORIFICE (mm)	FLOW FACTOR kv (LPM OF WATER @ 1 bar ΔP)	VALVE TYPE	PILOT PRESSURE	BODY MATERIAL AND INTERNALS			SEALS					MANUAL OVERRIDE			SOLENOID ENCLOSURE						SUFFIX		POWER VA			CONSTRUCTION REFRENCE NUMBER
																			WEATHER PROOF			EXPLOSION PROOF								
SIZE	BSP(F)	NPT(F)	MINIMUM	MAXIMUM					CF8M & SS316	BRASS	CF8 & SS316	NBR	Viton	EPDM	HYTREL	PTFE	NIL	STAYPUT CUM MOMENTARY	MOMENTARY	FLYING LEAD	PLUG IN, IP67	SQ. PLUG IN, IP67	TERMINAL BOX IP67	FPJB Ex d IIC, T4 OR T6, IP67	LARGE ENCLOSURE	SOLENOID SIZE	OXYGEN	AMONIA	AC INRUSH	AC HOLDING	DC	
2/2 NORMALLY CLOSED																														
1/2”	4G	4R	0	20	12	60	23101	2-20	B12	B2	B13	※	S2																	79
3/4”	6G	6R	0	20	20	110	23101	2-20	B12	B2	B13	※	S2																	80
1”	8G	8R	0	20	25	185	23101V01	2-20	B12	B2	B13	※	S2																	81

※ = Do not specify when opted for. Refer Page # 22 for Value of ※
✓= Options available

* Valve type printed in red colour is external pilot air/ air operated valve

ORDERING CODE AND EXAMPLE

VALVE

VALVE TYPE – SUFFIX – ORIFICE – PORT CONNECTION – BODY AND INTERNALS – SEAL - MEDIA
e.g. 23101-20-6R-B13-S2

DIMENSIONS

All Dimensions are in mm

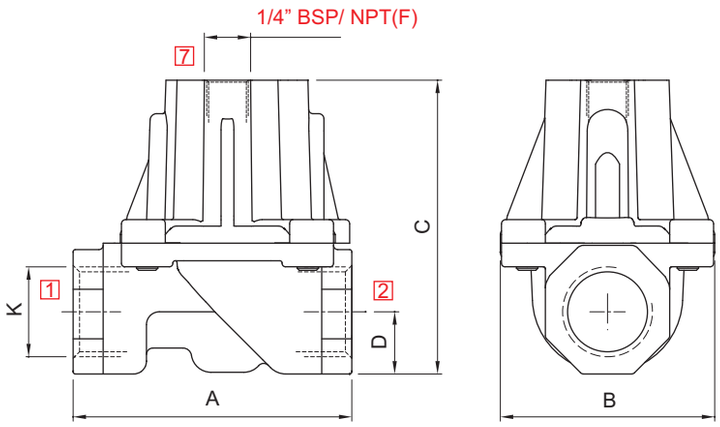

NW	K (PORT SIZE)	A	B	C	D	CONST. REF.
12	1/2”, 3/8”, 1/4”	65	50	79	15	79
20	3/4”	84	64	92	17	80
25	1”	110	95	114	25	81

2/2 AIR OPERATED, ISOLATED PISTON, NORMALLY CLOSED/ OPEN VALVE

TYPE	PRESSURE

TYPE	PRESSURE
23202	0 - 20 bar

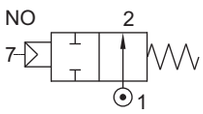

TYPE	PRESSURE
23102	0 - 20 bar

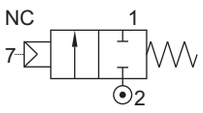

FEATURES

- Bubble tight shut off
- Mounts in any position
- Vibration resistance up to 9g
- Suitable for high speed cycling
- Speed up to 600 cycles/ min
- Life >10 million cycles



WETTED PARTS

Code	※	B18	
Body	Powder Coated Aluminium Cast/ CF8M	CF8M Aluminium	
Internals	Aluminium, Brass and SS 316	Brass SS 316	
Spring	SS 302		
Fasteners	SS 304		
Seat, Seals	NBR, Viton		

※ Do not specify code if opted for. Refer Page # 22 for Value of ※

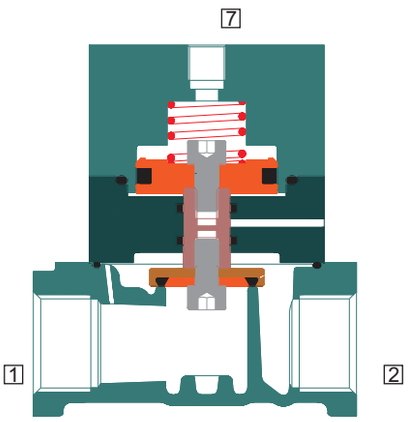

AMBIENT AND FLUID TEMPERATURE

-30 °C to 75 °C

MEDIA

Air, Inert Gases, Water, Vacuum, Free Flowing Liquid, Oil, Diesel, Kerosene, LPG, Furnace Oil

APPLICATION

Ideally suited for ON/ OFF control of fuel gas

SPARES (Refer page 25 for ordering code)

SPARE KIT	CODE
Seal Kit : Oring Set	98
Repair Kit : Oring Set, Fastener, Springs	99

PORT CONNECTION

	INLET	OUTLET	PILOT INLET
NC	2	1	7
NO	1	2	7

Contact Rotex for
- Any other ambient, fluid temperature, media and application

The External Air Pressure should be minimum 2 bar or ≥ main fluid pressure whichever is higher.
OIL Media Temperature Restricted from 0 °C to 100 °C

ROTEX
Engineering For The Future

2/2 AIR OPERATED, ISOLATED PISTON, NORMALLY CLOSED/ OPEN VALVE

SPECIFICATION

PORT CONNECTION			PRE-SSURE bar		ORIFICE (mm)	FLOW FACTOR kv (LPM OF WATER @ 1 bar ΔP)	VALVE TYPE	PILOT PRESSURE	BODY MATERIAL AND INTERNALS			SEALS					MANUAL OVERRIDE			SOLENOID ENCLOSURE						SUFFIX		POWER VA			CONSTRUCTION REFRENCE NUMBER
																			WEATHER PROOF				EXPLOSION PROOF								
SIZE	BSP(F)	NPT(F)	MINIMUM	MAXIMUM					ALUMINIUM	BRASS	CF8M/ Aluminium	NBR	Viton	EPDM	HYTREL	PTFE	NIL	STAYPUT CUM MOMENTARY	MOMENTARY	FLYING LEAD	PLUG IN, IP67	SQ. PLUG IN, IP67	TERMINAL BOX IP67	FPJB Ex d IIC, T4 OR T6, IP67	LARGE ENCLOSURE	SOLENOID SIZE	OXYGEN	AMONIA	AC INRUSH	AC HOLDING	DC	
2/2 NORMALLY CLOSED																															
1/2"	4G	4R	0	20	12	60	23102	2-20	※		B18	※	S2														✓				85
3/4"	6G	6R	0	20	20	110	23102	2-20	※		B18	※	S2														✓				86
1"	8G	8R	0	20	25	185	23102V01	2-20	※		B18	※	S2														✓				87
11/4"	10G	10R	0	20	40	400	23102V01	2-20	※			※	S2														✓				88
11/2"	12G	12R	0	20	40	440	23102V01	2-20	※			※	S2														✓				88
2"	16G	16R	0	20	50	650	23102V01	2-20	※			※	S2														✓				90
2/2 NORMALLY OPEN																															
1/2"	4G	4R	0	20	12	60	23202	2-20	※		B18	※	S2														✓				85
3/4"	6G	6R	0	20	20	110	23202	2-20	※		B18	※	S2														✓				86
1"	8G	8R	0	20	25	185	23202V01	2-20	※		B18	※	S2														✓				87
11/4"	10G	10R	0	20	40	400	23202V01	2-20	※			※	S2														✓				88
11/2"	12G	12R	0	20	40	440	23202V01	2-20	※			※	S2														✓				88
2"	16G	16R	0	20	50	650	23202V01	2-20	※			※	S2														✓				90

※ = Do not specify when opted for. Refer Page # 22 for Value of ※
✓= Options available

* Valve type printed in red colour is external pilot air/ air operated valve

ORDERING CODE AND EXAMPLE

VALVE

VALVE TYPE – SUFFIX – ORIFICE – PORT CONNECTION – BODY AND INTERNALS – SEAL - MEDIA

e.g. 23102-12-4R-B18-S2

DIMENSIONS

All Dimensions are in mm

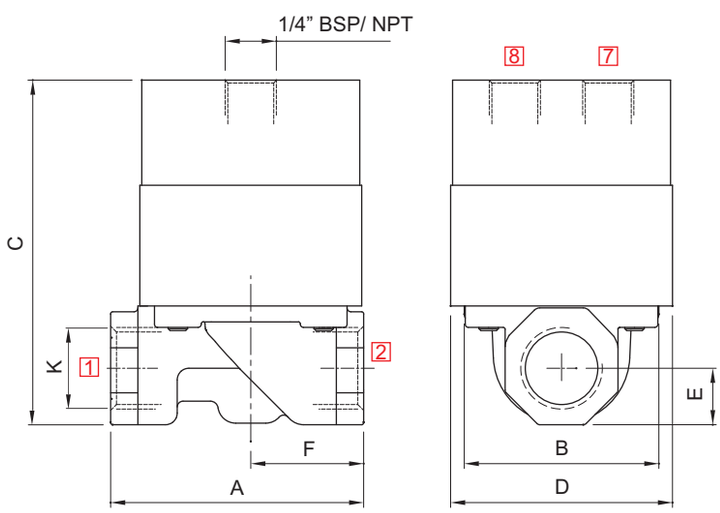

NW	K (PORT SIZE)	A	B	C	D	E	F	CONST. REF.
12	1/2"	65	50	99	57	15	29	85
20	3/4"	84	64	110	63	17	42	86
25	1"	110	95	135	82	22	52	87
40	11/4"	135	94	181	100	30	66	88
40	11/2"	135	94	181	100	30	66	88
50	2"	165	140	210	150	38	76	90

2/2 DIRECT ACTING HIGH PRESSURE SOLENOID VALVE

TYPE	PRESSURE

TYPE	PRESSURE

TYPE	PRESSURE
20116V01	0 - 400 bar

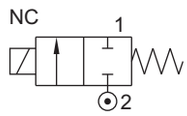

FEATURES

- Bubble tight shut off
- Mounts in any position
- Vibration resistance up to 9g
- Suitable for high speed cycling
- Speed up to 300 cycles/ min
- Life >2 million cycles



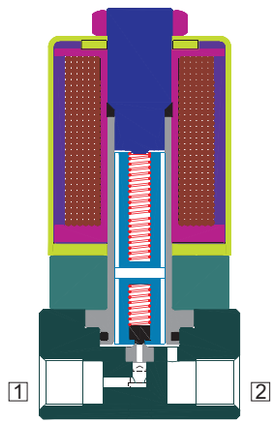

WETTED PARTS

Code			B5
Body			SS 316
Internals			SS 316
Guide Assembly	SS 304		
Shadow-Ring	None		
Plunger, Insert	SS 430		
Spring	SS 302		
Seat, Seals	PTFE, Viton		
Fasteners	SS 304		

AMBIENT AND FLUID TEMPERATURE

-20 °C to 80 °C

SPECIAL VERSION AND SUFFIX

Suffix : (Valve) AM
Special version : (Solenoid) CO, FR, SS, LC, TM

MEDIA

Air, Inert Gases, Water, Vacuum, Free Flowing Liquids, Oil, Diesel, Kerosene, LPG, CNG

APPLICATION

Fuel Gas Cutoff

PORT CONNECTION

FUNCTION	INLET	OUTLET	
NC	2	1	

Contact Rotex for
- Any other ambient, fluid temperature, media and application

SPARES (Refer page 25 for ordering code)

SPARE KIT	CODE
Seal Kit : Oring Set, Plunger Assembly	98
Repair Kit : Oring Set, Plunger Assembly, Springs, Guide Assembly	99
Solenoid Kit : Solenoid, Gasket	34

APPROVAL (* applied for)

Approval	TYPE 4X, 6P	IP67	Ex d IIC T4 or T5 or T6 IP66	Ex ia IIC T6 IP67	DGMS	CCOE
ISI		✓	✓	✓	✓	✓
CE		✓	✓	✓		
UL	✓		*			
CSPEL			✓	✓		
EAC			✓	✓		
IECEx			✓	✓		

⚠ OIL Media Temperature Restricted from 0 °C to 100 °C

ROTEX
Engineering For The Future

2/2 DIRECT ACTING HIGH PRESSURE SOLENOID VALVE

SPECIFICATION

PORT CONNECTION			PRE-SSURE bar		ORIFICE (mm)	FLOW FACTOR kv (LPM OF WATER @ 1 bar ΔP)	VALVE TYPE	PILOT PRESSURE	BODY MATERIAL AND INTERNALS				SEALS					MANUAL OVERRIDE			SOLENOID ENCLOSURE							SUFFIX		POWER VA			CONSTRUCTION REFRENCE NUMBER
																					WEATHER PROOF			EXPLOSION PROOF									
SIZE	BSP(F)	NPT(F)	MINIMUM	MAXIMUM					ALUMINIUM	ALUMINIUM + SS	BRASS (STD. PORT NPT)	SS 316 (STD. PORT NPT)	NBR	Viton	EPDM	HYTREL	PTFE	NIL	STAYPUT CUM MOMENTARY	MOMENTARY	FLYING LEAD	PLUG IN, IP67	SQ. PLUG IN, IP67	TERMINAL BOX IP67	EXPLOSION PROOF IIC, IP67	LARGE ENCLOSURE	SOLENOID SIZE	OXYGEN	AMONIA	AC INRUSH	AC HOLDING	DC	
2/2 NORMALLY CLOSED																																
1/4”		2R	0	300	1.6	0.6	20116V01					B5					S4	※					25	T	E		18		✓	20	20	20	91
			0	400	1.2	0.5	20116V01					B5					S4	※					25	T	E		18		✓	20	20	20	91
1/2”		4R	0	300	1.6	0.6	20116V01					B5					S4	※					25	T	E		18		✓	20	20	20	92
			0	400	1.2	0.5	20116V01					B5					S4	※					25	T	E		18		✓	20	20	20	92

SOLENOID 18		
Cable Entry	T	E
		Ex d	Ex emb
M20 x 1.5	19 17 M S	39 87 M S	58 M S	58 L T M S
M25 x 1.5	17	87	58	58 L T
1/2” NPT	16 17 N S	37 87 N S	58 N S	58 L T N S

※ = Do not specify when opted for. Refer Page # 22 for Value of ※
✓= Options available

ORDERING CODE AND EXAMPLE

VALVE + SOLENOID

VALVE TYPE – SUFFIX – ORIFICE – PORT CONNECTION – BODY AND INTERNALS – SEAL - MEDIA + SIZE – VOLTAGE – CURRENT – SOLENOID ENCLOSURE – SPECIAL VERSION – POWER – INSULATION – APPROVAL

e.g. 20116V01-1.2-2R-B5-S4+II-230V-AC/DC-25-RC-LW20; 20116V01-1.6-2R-B5-S4+II-24V-DC-16-LW20-H

DIMENSIONS

All Dimensions are in mm

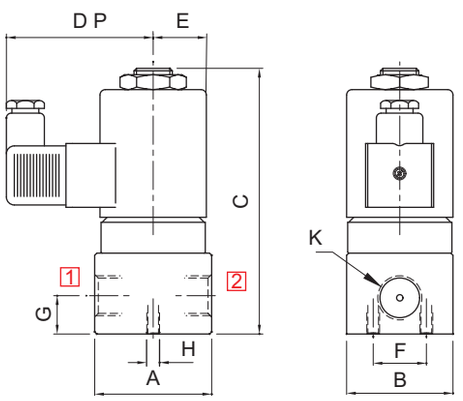

PLUG IN SOLENOID TYPE 22/ 25

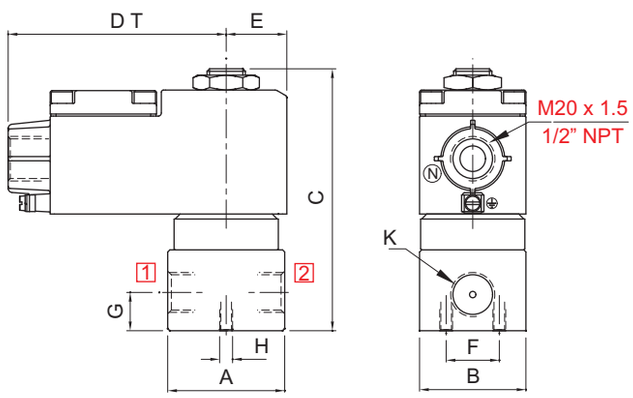

TERMINAL BOX/ Ex d/ TYPE 16, 19, 37, 39, 58, 58LT

K (PORT SIZE)	A	B	C	D P	D T	E	F	G	H	CONST. REF.
VALVE TYPE : 20116V01										
1/4”	55	50	115	66	104	28	25	10	M6	91
1/2”	55	50	123	66	104	28	25	14	M6	92

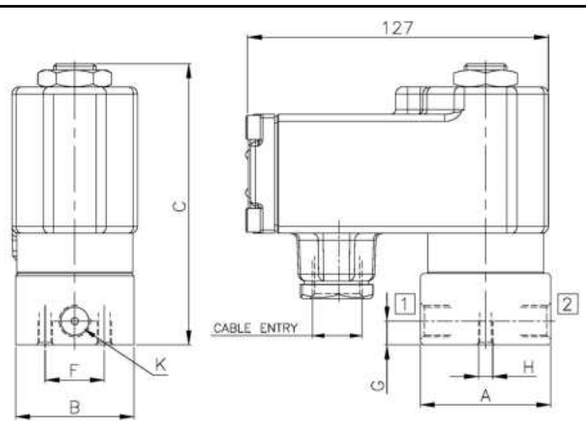

PLUG IN SOLENOID TYPE 87

Specifications are subject to change without notice.

2/2 POPPET TYPE, NC/ NO HIGH PRESSURE (70 bar) SOLENOID VALVE

TYPE	PRESSURE

TYPE	PRESSURE
21204	5 - 70 bar

NO

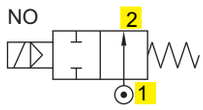

TYPE	PRESSURE
21104	5 - 70 bar
21104EP	5 - 100 bar

NC

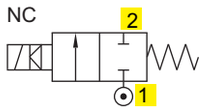

FEATURES

- Bubble tight shut off
- Mounts in any position
- Vibration resistance up to 9g
- Suitable for high speed cycling
- Speed up to 300 cycles/ min
- Life > 5 million cycles



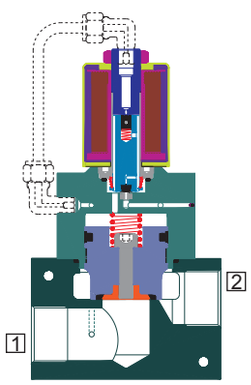

WETTED PARTS

Code	B2	B5
Body	Brass	SS 316
Internals	Brass and SS 316	SS 316
Guide Assembly	SS 304	
Shadow-Ring	None	
Plunger, Insert	SS 430	
Spring	SS 302	
Seat, Seals	PTFE, Viton	
Fasteners	SS 304	

AMBIENT AND FLUID TEMPERATURE

-20 °C to 80 °C

SPECIAL VERSION AND SUFFIX

Suffix : (Valve) AM
Special version : (Solenoid) CO, FR, SS, TM

MEDIA

Air, Inert Gases, Water, Free Flowing Liquids, Oil, Diesel, Kerosene, LPG

APPLICATION

Line Mounted

PORT CONNECTION

FUNCTION	INLET	OUTLET	
NC	1	2	
NO	1	2	

SPARES (Refer page 25 for ordering code)

SPARE KIT	CODE
Seal Kit : Oring Set and Plunger Assembly	98
Repair Kit : Oring Set, Plunger Assembly, Springs, Manual Override, Guide Assembly Piston Kit	99
Solenoid Kit : Solenoid, Gasket	34

APPROVAL (* applied for)

Approval	TYPE 4X, 6P	IP67	Ex d IIC T4 or T5 or T6 IP66	Ex ia IIC T6 IP67	DGMS	CCOE
ISI		✓	✓	✓	✓	✓
CE		✓	✓	✓		
UL	✓		*			
CCPEL			✓	✓		
EAC			✓	✓		
IECEx			✓	✓		

Contact Rotex for
- Any other ambient, fluid temperature, media and application
- PED approved valve Orifice 25mm & Higher

⚠ OIL Media Temperature Restricted from 0 °C to 100 °C

ROTEX
Engineering For The Future

2/2 POPPET TYPE, NC/ NO HIGH PRESSURE (70 bar) SOLENOID VALVE

SPECIFICATION

PORT CONNECTION			PRE-SSURE bar		ORIFICE (mm)	FLOW FACTOR kv (LPM OF WATER @ 1 bar ΔP)	VALVE TYPE	PILOT PRESSURE	BODY MATERIAL AND INTERNALS				SEALS					MANUAL OVERRIDE			SOLENOID ENCLOSURE								SUFFIX		POWER VA			CONSTRUCTION REFRENCE NUMBER
																					WEATHER PROOF				EXPLOSION PROOF										
SIZE	BSP(F)	NPT(F)	MINIMUM	MAXIMUM					ALUMINIUM	ALUMINIUM + SS	BRASS	SS316	NBR	Viton	EPDM	HYTREL	PTFE	NIL	STAYPUT CUM MOMENTARY	MOMENTARY	FLYING LEAD	PLUG IN, IP67	SQ. PLUG IN, IP67	TERMINAL BOX IP67	EXPLOSION PROOF IIC, IP67	LARGE ENCLOSURE	SOLENOID SIZE		OXYGEN	AMONIA	AC INRUSH	AC HOLDING	DC	
2/2 NORMALLY CLOSED																																	
1/4"	2G	2R	5	70	12	60	21104					B5					S8	×	M11	M4			25	T	E		18		✓	20	20	20	93
1/2"	4G	4R	5	70	12	60	21104					B5					S8	×	M11	M4			25	T	E		18		✓	20	20	20	93
3/4"	6G	6R	5	70	20	110	21104					B5					S8	×	M11	M4			25	T	E		18		✓	20	20	20	94
1"	8G	8R	5	70	25	180	21104					B5					S8	×	M11	M4			25	T	E		18		✓	20	20	20	95
11/2"	12G	12R	5	70	40	400	21104					B5					S8	×	M11	M4			25	T	E		18		✓	20	20	20	96
2"	16G	16R	5	70	50	600	21104					B5					S8	×	M11	M4			25	T	E		18		✓	20	20	20	97
1/4"	2G	2R	5	100	12	60	21104EP					B5					S8	×	M11	M4			25	T	E		18		✓	20	20	20	93
1/2"	4G	4R	5	100	12	60	21104EP					B5					S8	×	M11	M4			25	T	E		18		✓	20	20	20	93
3/4"	6G	6R	5	100	20	110	21104EP					B5					S8	×	M11	M4			25	T	E		18		✓	20	20	20	94
1"	8G	8R	5	100	25	180	21104EP					B5					S8	×	M11	M4			25	T	E		18		✓	20	20	20	95
11/2"	12G	12R	5	100	40	400	21104EP					B5					S8	×	M11	M4			25	T	E		18		✓	20	20	20	96
2"	16G	16R	5	100	50	600	21104EP					B5					S8	×	M11	M4			25	T	E		18		✓	20	20	20	97
2/2 NORMALLY OPEN																																	
1/4"	2G	2R	5	70	12	60	21204					B5					S8	×	M11	M4			25	T	E		18		✓	20	20	20	93
1/2"	4G	4R	5	70	12	60	21204					B5					S8	×	M11	M4			25	T	E		18		✓	20	20	20	93
3/4"	6G	6R	5	70	20	110	21204					B5					S8	×	M11	M4			25	T	E		18		✓	20	20	20	94
1"	8G	8R	5	70	25	180	21204					B5					S8	×	M11	M4			25	T	E		18		✓	20	20	20	95
11/2"	12G	12R	5	70	40	400	21204					B5					S8	×	M11	M4			25	T	E		18		✓	20	20	20	96
2"	16G	16R	5	70	50	600	21204					B5					S8	×	M11	M4			25	T	E		18		✓	20	20	20	97

SOLENOID 18		
Cable Entry	T	E
		Ex d / Ex emb
M20 x 1.5	19 17 MS	39 87 MS / 58 MS 58 LT MS
M25 x 1.5	17	87 / 58 58 LT
1/2" NPT	16 17 NS	37 87 NS / 58 NS 58 LT NS

※ = Do not specify when opted for. Refer Page # 22 for Value of ※
✓= Options available

ORDERING CODE AND EXAMPLE — VALVE + SOLENOID

VALVE TYPE – SUFFIX – ORIFICE – PORT CONNECTION – BODY AND INTERNALS – MANUAL OVERRIDE – SEAL - MEDIA + SIZE – VOLTAGE – CURRENT – SOLENOID ENCLOSURE – SPECIAL VERSION – POWER – INSULATION – APPROVAL

e.g. 21104-12-4G-B5-S8+II-24V DC-25-LW20, 21104-20-6R-B5-M11-S8+II-230V-AC/DC-37-FR-LW20-H

DIMENSIONS

All Dimensions are in mm

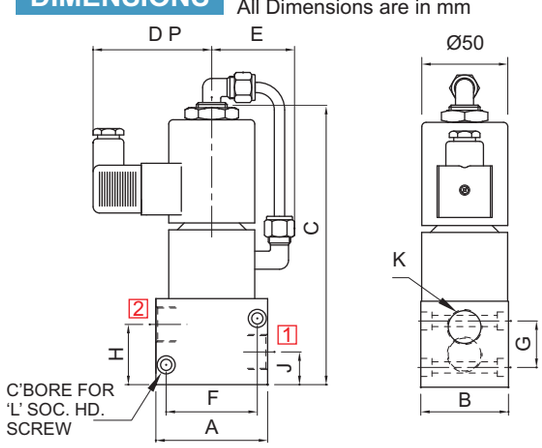

SQUARE PLUG IN SOLENOID TYPE 25

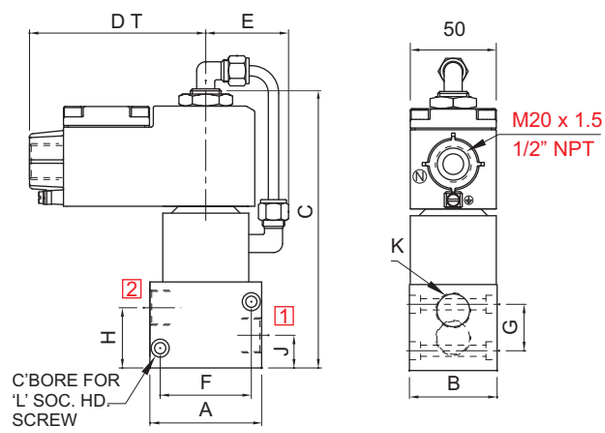

TERMINAL BOX/ Ex d, TYPE16, 19, 37, 39, 58, 58LT, LC

NW	K (PORT SIZE)	A	B	C	D P	D T	E	F	G	H	J	L	CONST. REF.
VALVE TYPE : 21104, 21204													
12	1/2"	65	51	167	68	103	48	53	27	35	19	M6	93
20	3/4"	80	61	184	68	103	53	66	31	42	23	M6	94
25	1"	110	81	218	68	103	63	90	50	47	23	M6	95
40	11/2"	135	100	224	68	103	70	115	75	64	31	M6	96
50	2"	166	110	244	68	103	83	147	88	72	35	M6	97

Specifications are subject to change without notice.

2/2 NORMALLY CLOSED, HIGH PRESSURE (400 bar) SOLENOID VALVE

TYPE	PRESSURE

TYPE	PRESSURE

TYPE	PRESSURE
21109V01	5 - 400 bar

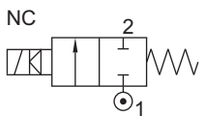

FEATURES

- Bubble tight shut off
- Mounts in any position
- Vibration resistance up to 9g
- Suitable for high speed cycling
- Speed up to 200 cycles/ min
- Life > 5 million cycles



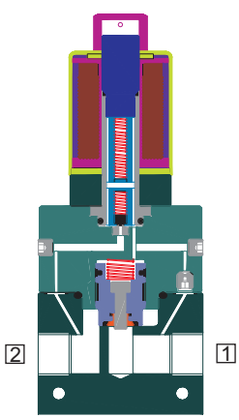

WETTED PARTS

Code		B5
Body		SS316
Internals		SS 316
Guide Assembly	SS 304	
Shadow-Ring	None	
Plunger, Insert	SS 430	
Spring	SS 302	
Seat, Seals	PTFE	
Fasteners	SS 304	
External Fasteners	High Strength Steel	

AMBIENT AND FLUID TEMPERATURE

-20 °C to 80 °C

SPECIAL VERSION AND SUFFIX

Suffix : (Valve) AM
Special versions : (Solenoid) CO, FR, SS, LC, TM

MEDIA

Air, Inert Gases, Water, Free Flowing Liquids,
Oil, Diesel, Kerosene, LPG, CNG

APPLICATION

Fuel line Cut OFF, Priority panel, Dispensing

PORT CONNECTION

FUNCTION	INLET	OUTLET	
NC	1	2	

Contact Rotex for
- Any other ambient, fluid temperature, media and application

SPARES (Refer page 25 for ordering code)

SPARE KIT	CODE
Seal Kit : Oring Set and Plunger Assembly	98
Repair Kit : Oring Set, Plunger Assembly, Springs, Guide Assembly, Piston Kit	99
Solenoid Kit : Solenoid, Gasket	34

APPROVAL (* applied for)

Approval	TYPE 4X, 6P	IP67	Ex d IIC T4 or T5 or T6 IP66	Ex ia IIC T6 IP67	DGMS	CCOE
ISI		✓	✓	✓	✓	✓
CE		✓	✓	✓		
UL	✓		*			
CHEMEL			✓	✓		
EAC			✓	✓		
IECEx			✓	✓		

⚠ OIL Media Temperature Restricted from 0 °C to 100 °C

ROTEX
Engineering For The Future

2/2 NORMALLY CLOSED, HIGH PRESSURE (400 bar) SOLENOID VALVE

SPECIFICATION

PORT CONNECTION			PRE-SSURE bar		ORIFICE (mm)	FLOW FACTOR kv (LPM OF WATER @ 1 bar ΔP)	VALVE TYPE	PILOT PRESSURE	BODY MATERIAL AND INTERNALS				SEALS					MANUAL OVERRIDE			SOLENOID ENCLOSURE							SUFFIX		POWER VA			CONSTRUCTION REFRENCE NUMBER
																					WEATHER PROOF			EXPLOSION PROOF									
SIZE	BSP(F)	NPT(F)	MINIMUM	MAXIMUM					ALUMINIUM	ALUMINIUM + SS	BRASS	SS316	NBR	Viton	EPDM	PTFE	PTFE+Viton	NIL	STAYPUT CUM MOMENTARY	MOMENTARY	FLYING LEAD	PLUG IN, IP67	SQ. PLUG IN, IP67	TERMINAL BOX IP67	EXPLOSION PROOF IIC, IP67	LARGE ENCLOSURE	SOLENOID SIZE	OXYGEN	AMONIA	AC INRUSH	AC HOLDING	DC	
2/2 NORMALLY CLOSED																																
1/4”		2R	5	400	12	45	21109V01					B5				S4		※					25	T	E		18		✓	20	20	20	100
3/8”		3R	5	400	12	50	21109V01					B5				S4		※					25	T	E		18		✓	20	20	20	100
1/2”		4R	5	400	12	60	21109V01					B5				S4		※					25	T	E		18		✓	20	20	20	100

SOLENOID 18		
Cable Entry	T	E
		Ex d / Ex emb
M20 x 1.5	19 17 MS	39 87 MS / 58 MS
M25 x 1.5	17	87 / 58
1/2” NPT	16 17 NS	37 87 NS / 58 NS

SOLENOID 58LT	
Cable Entry	E
	Ex emb
M20 x 1.5	58 LT MS
1/2” NPT	58 LT NS

※ = Do not specify when opted for. Refer Page # 22 for Value of ※
✓= Options available

ORDERING CODE AND EXAMPLE

VALVE + SOLENOID

VALVE TYPE – SUFFIX – ORIFICE – PORT CONNECTION – BODY AND INTERNALS – SEAL - MEDIA +
SIZE – VOLTAGE - CURRENT – SOLENOID ENCLOSURE – SPECIAL VERSION – POWER – INSULATION – APPROVAL
e.g. 21109V01-12-4R-B5-S4+II-230V-AC/DC-39-FR-LW20-H

DIMENSIONS

All Dimensions are in mm

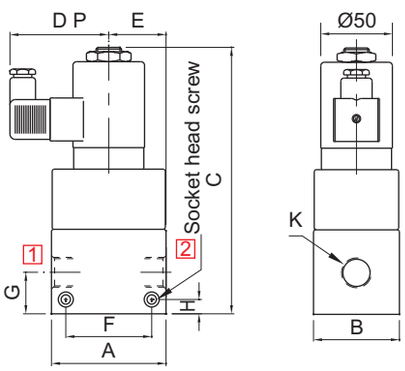

SQ. PLUG IN SOLENOID TYPE 25

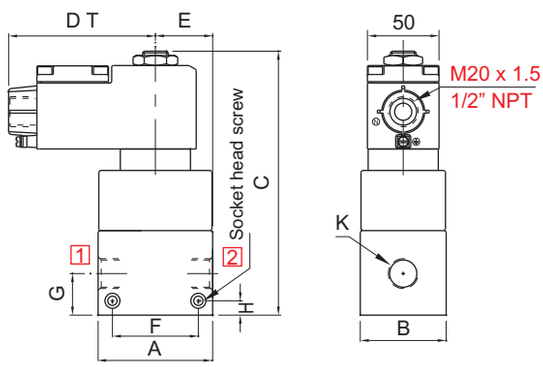

TERMINAL BOX/Ex d, TYPE 16, 19, 37, 39, 58, 58LT, LC

NW	K (PORT SIZE)	A	B	C	D P	D T	E	F	G	H	J	CONST. REF.
VALVE TYPE : 21109												
12	1/4”	80	60	186	68	103	30	60	29	10	M6	100
12	3/8”	80	60	186	68	103	30	60	29	10	M6	100
12	1/2”	80	60	186	68	103	30	60	29	10	M6	100

Specifications are subject to change without notice.

3 PORT VALVE

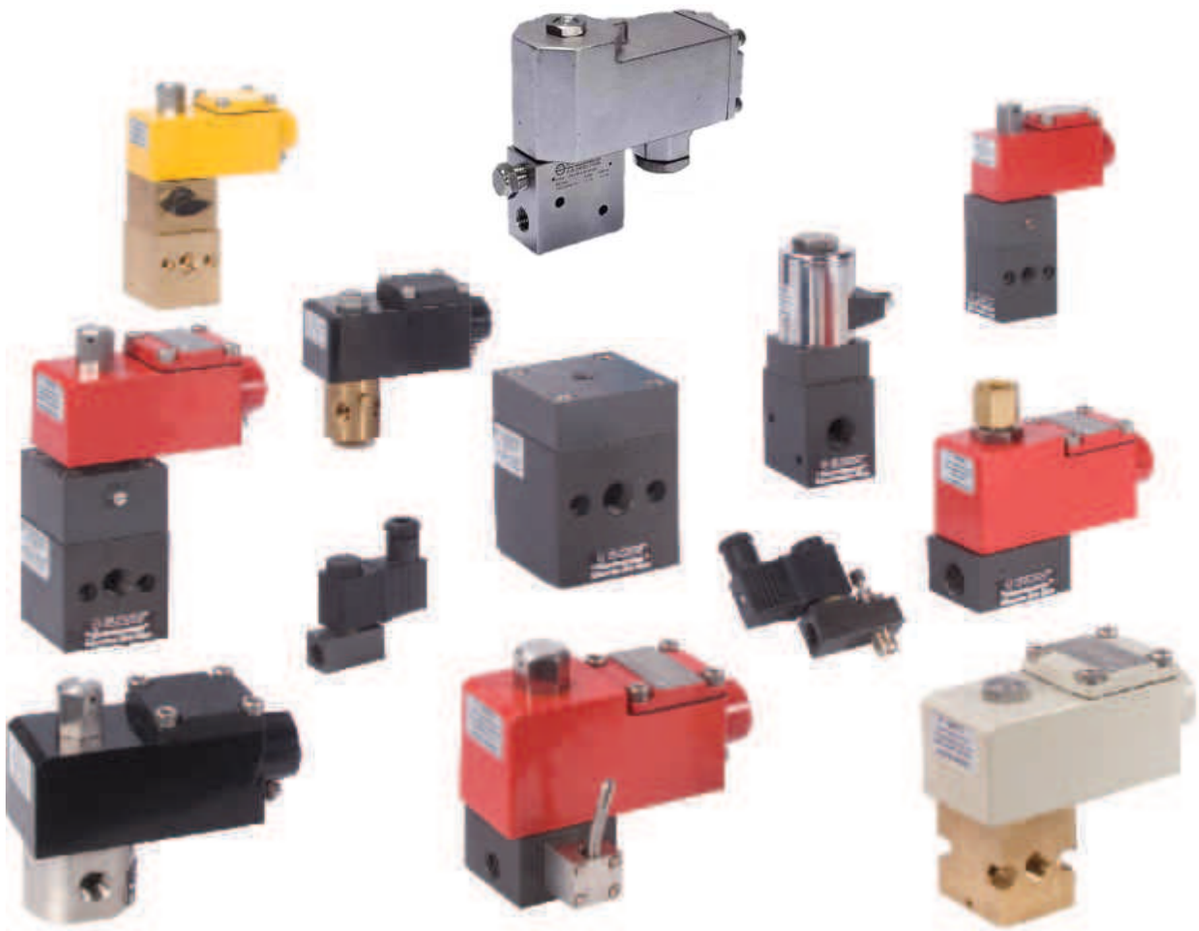

TYPE	NW mm	PRESS. bar	PAGE NO.	NW mm	PRESS. bar	PAGE NO.	NW mm	PRESS. bar	PAGE NO.
	NORMALLY CLOSED			NORMALLY OPEN			UNIVERSAL		
Direct Acting	1.2 - 4	0 - 63	117	1.2 - 4	0 - 63	117	1.2 - 4	0 - 32	117
Direct Acting	1.5 To 2.5	0 - 10	123						
Direct Acting Direct Mount	1.5 To 2.5	0 - 10	125						
Direct Acting (All Ports in Body)	1.2 - 3	0 - 20	127	1.2 - 3	0 - 20	127	1.2 - 3	0 - 12	127
Direct Acting High Orifice	5, 7, 10	0 - 20	129	5, 7, 10	0 - 20	129	5, 7, 10	0 - 20	129
Direct Acting High Orifice							5	0 - 10	133
Internal Pilot Operated	7 To 25	2 - 40	135	7 To 25	2 - 40	135	7 To 25	1 - 8	139
External Pilot Operated							7 To 25	0 - 20	143
Air Operated							7 To 25	0 - 35	145
Direct Acting High Pressure	0.8	0 - 150	147	0.8	0 - 150	149			
Large Orifice Internal Pilot	40, 50	2 - 10	147						
Large Orifice External Pilot	40, 50	0 - 10	149						
High Pressure Internal Pilot Operated	7 To 25	4 - 70	151	7 To 25	5 - 70	151			

3 PORT SOLENOID VALVE

SOLENOID INTERCHANGEABILITY



WP TERMINAL BOX
(16, 19)



WP TERMINAL BOX
SS CAST ENCLOSURE
(16-CO, 19-CO)



WP MULTI PIN
(70)



WP/ EP LATCH
ENCLOSURE
(16-LC, 19-LC) (37-LC, 39-LC)



WP DIN PLUGIN
(22)



EP Ex d ENCLOSURE
(37, 39)



WP DIN PLUGIN
(25)



EP Ex d SS CAST
ENCLOSURE
(37-CO, 39-CO)



WP FLYING LEAD
(01)



EP BCE Solenoid
AL/ SS CAST ENCLOSURE
Ex d Type 87, 87-CO
Ex ia Type 62, 62-CO
Type 66, 66-CO

WP : WEATHER PROOF
EP : EXPLOSION PROOF

ROTEX THREE PORT VALVE PROVIDES INTERCHANGEABILITY FOR VARIOUS SOLENOID ENCLOSURES, VOLTAGE AND CURRENT WITHOUT AFFECTING ITS PERFORMANCE.

3/2 DIRECT ACTING SOLENOID VALVE

TYPE	PRESSURE
30301	0 - 14 bar
30310	0 - 32 bar

UNI

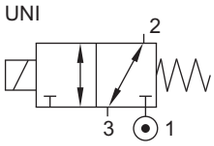

TYPE	PRESSURE
30201	0 - 20 bar
30206	0 - 63 bar

NO

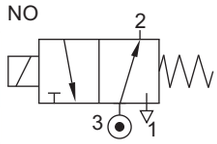

TYPE	PRESSURE
30125	0 - 20 bar
30126	0 - 63 bar

NC

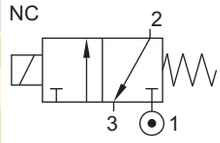

FEATURES

- Bubble tight shut off
- Mounts in any position
- Suitable for vacuum up to 10^{-6} torr
- Vibration resistance up to 9g
- Suitable for high speed cycling
- Speed up to 1000 cycles/ min
- Life >10 million cycles
- Manual override optionally provided



WETTED PARTS

Code	※	B2	B5
Body	Anodized Aluminium	Brass	SS 316
Internals	Aluminium	Brass	SS 316
Guide Assembly	SS 304		
Shadow-Ring	Copper/ Silver/ None		
Plunger, Insert	SS 430		
Spring	SS 302		
Seat, Seals	NBR, Viton, EPDM		

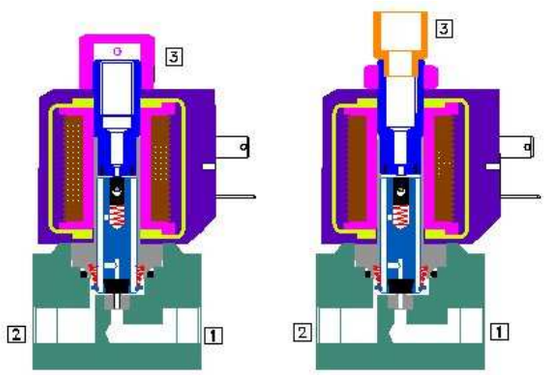

AMBIENT AND FLUID TEMPERATURE

-30 °C to 75 °C

SPECIAL VERSION AND SUFFIX

Suffix : (Valve) OX, AM
Special version : (Coil) CO, FR, SS, LC, III, TM

MEDIA

Air, Inert Gases, Water

APPLICATION

Single acting actuator/ Cylinder/ control valve actuation
Diverting/ mixing of fluid

PORT CONNECTION

FUNCTION	INLET	OUTLET	EXHAUST
NC	1	2	3
NO	3	2	1
Mixing	1 and 3	2	
Diverting	2	1 and 3	

Contact Rotex for
- Any other ambient, fluid temperature, media and application
- UL listed, c(UL) Listed general purpose Valve
- Media like Water, Light Oil etc.

SPARES (Refer page 25 for ordering code)

SPARE KIT	CODE
Seal Kit : Oring Set and Plunger Assembly	98
Repair Kit : Oring Set, Plunger Assembly, Springs, Manual Override, Guide Assembly	99
Solenoid Kit : Solenoid, Gasket	34

APPROVAL (* applied for)

Approval	TYPE 4X, 6P	IP67	Ex d IIC T4 or T5 or T6 IP66	Ex ia IIC T6 IP67	DGMS	CCOE
ISI		✓	✓	✓	✓	✓
CE		✓	✓	✓		
UL	✓		*			
CCPEL			✓	✓		
EAC			✓	✓		
IECEx			✓	✓		

7

ROTEX
Engineering For The Future

3/2 DIRECT ACTING SOLENOID VALVE

SPECIFICATION

PORT CONNECTION			PRE-SSURE bar		ORIFICE (mm)	FLOW FACTOR kv (LPM OF WATER @ 1 bar ΔP)	VALVE TYPE	PILOT PRESSURE	BODY MATERIAL AND INTERNALS				SEALS					MANUAL OVERRIDE			SOLENOID ENCLOSURE							SUFFIX		POWER VA			CONSTRUCTION REFERENCE NUMBER
																					WEATHER PROOF			EXPLOSION PROOF									
SIZE	BSP(F)	NPT(F)	MINIMUM	MAXIMUM					ALUMINIUM	ALUMINIUM + SS	BRASS (STD. PORT NPT)	SS 316 (STD. PORT NPT)	NBR	Viton	EPDM	HYTREL	PTFE+Viton	NIL	STAYPUT CUM MOMENTARY	MOMENTARY	FLYING LEAD	PLUG IN, IP67	SQ. PLUG IN, IP67	TERMINAL BOX IP67	EXPLOSION PROOF IIC, IP67	LARGE ENCLOSURE	SOLENOID SIZE	OXYGEN	AMONIA	AC INRUSH	AC HOLDING	DC	
3/2 NORMALLY CLOSED																																
1/8", 1/4", 3/8", 1/2"	1G, 2G, 3G, 4G	1R, 2R, 3R, 4R	0	4	3	4	30125		※		B2	B5	※	S2	S1		S8	※	M6	M8	F	22	25	T	E	III	14	✓	✓	18	12	8	A
			0	6	2.5	3.5	30125		※		B2	B5	※	S2	S1		S8	※	M6	M8	F	22	25	T	E	III	14	✓	✓	18	12	8	A
			0	6	4	7	30126		※		B2	B5	※	S2	S1		S8	※	M6	M8	F		25	T	E		18	✓	✓	13	13	13	C
			0	8	2.2	2.5	30125		※		B2	B5	※	S2	S1		S8	※	M6	M8	F	22	25	T	E	III	14	✓	✓	18	12	8	A
			0	8	3.5	5	30126		※		B2	B5	※	S2	S1		S8	※	M6	M8	F		25	T	E		18	✓	✓	13	13	13	C
			0	12	3	4	30126		※		B2	B5	※	S2	S1		S8	※	M6	M8	F		25	T	E		18	✓	✓	13	13	13	C
			0	15	1.6	1.4	30125		※		B2	B5	※	S2	S1		S8	※	M6	M8	F	22	25	T	E	III	14	✓	✓	18	12	8	A
			0	16	2.5	3.5	30126		※		B2	B5	※	S2	S1		S8	※	M6	M8	F		25	T	E		18	✓	✓	13	13	13	C
			0	20	1.2	0.7	30125		※		B2	B5	※	S2	S1		S8	※	M6	M8	F	22	25	T	E	III	14	✓	✓	18	12	8	A
			0	25	2.2	2.5	30126		※		B2	B5	※	S2	S1		S8	※	M6	M8	F		25	T	E		18	✓	✓	13	13	13	C
			0	32	1.8	1.8	30126		※		B2	B5	※	S2	S1		S8	※	M12	M5	F		25	T	E		18	✓	✓	13	13	13	C
			0	63	1.2	0.7	30126		※		B2	B5					S8	※	M11	M4	F		25	T	E		18	✓	✓	13	13	13	C
			0	10	1.8	1.8	30125		※		B2	B5	※	S2	S1			※	M6	M8	F	22	25	T	E	III	14	✓	✓	18	12	8	B

Cable Entry	T	E																	
		Ex d					Ex a			Ex emb									
M20 x 1.5	19	39	87	M	S	66	M	S	58	M	S	58	L	T	M	S			
M25 x 1.5			87			66			58			58	L	T					
1/2" NPT	16	37	87	N	S	66	N	S	58	N	S	58	L	T	N	S			

※ = Do not specify when opted for. Refer Page # 22 for Value of ※
✓= Options available

Code	Construction Reference
A	301, 303
B	302, 304
C	305, 307
D	306, 308

	F
Flying lead IP54	※
Flying lead IP67	01

ORDERING CODE AND EXAMPLE

VALVE + SOLENOID

VALVE TYPE – SIL – SUFFIX – ORIFICE – PORT CONNECTION – BODY AND INTERNALS – MANUAL OVERRIDE – SEAL – MEDIA + SIZE – VOLTAGE – CURRENT – SOLENOID ENCLOSURE – SPECIAL VERSION – POWER – INSULATION – APPROVAL – SIL – ACCESSORIES SOLENOID

e.g. 30125-1.8-2G+I-24V-DC-22, 30126-2.2-2G+II-24V-DC-37-H

Specifications are subject to change without notice.

3/2 DIRECT ACTING SOLENOID VALVE

SPECIFICATION

PORT CONNECTION			PRE-SSURE bar		ORIFICE (mm)	FLOW FACTOR kv (LPM OF WATER @ 1 bar ΔP)	VALVE TYPE	PILOT PRESSURE	BODY MATERIAL AND INTERNALS				SEALS					MANUAL OVERRIDE			SOLENOID ENCLOSURE							SUFFIX		POWER VA			CONSTRUCTION REFERENCE NUMBER
																					WEATHER PROOF				EXPLOSION PROOF										
SIZE	BSP(F)	NPT(F)	MINIMUM	MAXIMUM					ALUMINIUM	ALUMINIUM + SS	BRASS (STD. PORT NPT)	SS 316 (STD. PORT NPT)	NBR	Viton	EPDM	HYTREL	PTFE+Viton	NIL	STAYPUT CUM MOMENTARY	MOMENTARY	FLYING LEAD	PLUG IN, IP67	SQ. PLUG IN, IP67	TERMINAL BOX IP67	EXPLOSION PROOF IIC, IP67	LARGE ENCLOSURE	SOLENOID SIZE	OXYGEN	AMONIA	AC INRUSH	AC HOLDING	DC	
3/2 NORMALLY OPEN																																
1/8" / 1/4" / 3/8" / 1/2"	1G / 2G / 3G / 4G	1R / 2R / 3R / 4R	0	4	3	4	30201		※		B2	B5	※	S2	S1			※	M6	M8	F	22	25	T	E	III	14	✓	✓	18	12	8	E
			0	6	2.5	3.5	30201		※		B2	B5	※	S2	S1			※	M6	M8	F	22	25	T	E	III	14	✓	✓	18	12	8	E
			0	6	4	7	30206		※		B2	B5	※	S2	S1		S8	※	M6	M8	F		25	T	E		18	✓	✓	13	13	13	G
			0	8	2.2	2.5	30201		※		B2	B5	※	S2	S1			※	M6	M8	F	22	25	T	E	III	14	✓	✓	18	12	8	E
			0	8	3.5	5	30206		※		B2	B5	※	S2	S1		S8	※	M6	M8	F		25	T	E		18	✓	✓	13	13	13	G
			0	12	3	4	30206		※		B2	B5	※	S2	S1		S8	※	M6	M8	F		25	T	E		18	✓	✓	13	13	13	G
			0	15	1.6	1.4	30201		※		B2	B5	※	S2	S1			※	M6	M8	F	22	25	T	E	III	14	✓	✓	18	12	8	E
			0	16	2.5	3.5	30206		※		B2	B5	※	S2	S1		S8	※	M6	M8	F		25	T	E		18	✓	✓	13	13	13	G
			0	20	1.2	0.7	30201		※		B2	B5	※	S2	S1			※	M6	M8	F	22	25	T	E	III	14	✓	✓	18	12	8	E
			0	25	2.2	2.5	30206		※		B2	B5	※	S2	S1		S8	※	M6	M8	F		25	T	E		18	✓	✓	13	13	13	G
			0	32	1.8	1.8	30206		※		B2	B5	※	S2	S1		S8	※	M12	M5	F		25	T	E		18	✓	✓	13	13	13	G
			0	63	1.2	0.7	30206		※		B2	B5					S8	※	M11	M4	F		25	T	E		18	✓	✓	13	13	13	G
			0	10	1.8	1.8	30201		※		B2	B5	※	S2	S1			※	M6	M8	F	22	25	T	E	III	14	✓	✓	18	12	8	F

Cable Entry	T	E																		
		Ex d					Ex a			Ex emb										
M20 x 1.5	19	39	87	M	S	66	M	S	58	M	S	58	L	T	M	S				
M25 x 1.5			87			66			58			58	L	T						
1/2" NPT	16	37	87	N	S	66	N	S	58	N	S	58	L	T	N	S				

※ = Do not specify when opted for. Refer Page # 22 for Value of ※
✓= Options available

Code	Construction Reference
E	309, 311
F	310, 312
G	313, 315
H	314, 316

	F
Flying lead IP54	※
Flying lead IP67	01

ORDERING CODE AND EXAMPLE

VALVE + SOLENOID

VALVE TYPE – SIL – SUFFIX – ORIFICE – PORT CONNECTION – BODY AND INTERNALS – MANUAL OVERRIDE – SEAL – MEDIA + SIZE – VOLTAGE – CURRENT – SOLENOID ENCLOSURE – SPECIAL VERSION – POWER – INSULATION – APPROVAL – SIL – ACCESSORIES SOLENOID

e.g. 30201-2.5-2G+I-24V-DC-22; 30206-2.2-2R-B5-S1+II-24V-DC-37-H

ROTEX
Engineering For The Future

3/2 DIRECT ACTING SOLENOID VALVE

SPECIFICATION

PORT CONNECTION			PRESSURE bar		ORIFICE (mm)	FLOW FACTOR kv (LPM OF WATER @ 1 bar ΔP)	VALVE TYPE	PILOT PRESSURE	BODY MATERIAL AND INTERNALS				SEALS					MANUAL OVERRIDE			SOLENOID ENCLOSURE							SUFFIX		POWER VA			CONSTRUCTION REFERENCE NUMBER
																					WEATHER PROOF				EXPLOSION PROOF										
SIZE	BSP(F)	NPT(F)	MINIMUM	MAXIMUM					ALUMINIUM	ALUMINIUM + SS	BRASS (STD. PORT NPT)	SS 316 (STD. PORT NPT)	NBR	Viton	EPDM	HYTREL	PTFE+Viton	NIL	STAYPUT CUM MOMENTARY	MOMENTARY	FLYING LEAD	PLUG IN, IP67	SQ. PLUG IN, IP67	TERMINAL BOX IP67	EXPLOSION PROOF IIC, IP67	LARGE ENCLOSURE	SOLENOID SIZE	OXYGEN	AMONIA	AC INRUSH	AC HOLDING	DC	
3/2 UNIVERSAL																																
1/8" / 1/4" / 3/8" / 1/2"	1G / 2G / 3G / 4G	1R / 2R / 3R / 4R	0	1.5	3	4	30301		※		B2	B5	※	S2	S1			※	M6	M8	F	22	25	T	E	III	14	✓	✓	18	12	8	I
			0	3.5	4	7	30310		※		B2	B5	※	S2	S1	S8		※	M6	M8	F		25	T	E		18	✓	✓	13	13	13	K
			0	4	2.5	3.5	30301		※		B2	B5	※	S2	S1			※	M6	M8	F	22	25	T	E	III	14	✓	✓	18	12	8	I
			0	5	2.2	2.5	30301		※		B2	B5	※	S2	S1			※	M6	M8	F	22	25	T	E	III	14	✓	✓	18	12	8	I
			0	5	3.5	5	30310		※		B2	B5	※	S2	S1	S8		※	M6	M8	F		25	T	E		18	✓	✓	13	13	13	K
			0	8	3	4	30310		※		B2	B5	※	S2	S1	S8		※	M6	M8	F		25	T	E		18	✓	✓	13	13	13	K
			0	10	1.6	1.4	30301		※		B2	B5	※	S2	S1			※	M6	M8	F	22	25	T	E	III	14	✓	✓	18	12	8	I
			0	10	2.5	3.5	30310		※		B2	B5	※	S2	S1	S8		※	M6	M8	F		25	T	E		18	✓	✓	13	13	13	K
			0	12	2.2	2.5	30310		※		B2	B5	※	S2	S1	S8		※	M6	M8	F		25	T	E		18	✓	✓	13	13	13	K
			0	14	1.2	0.7	30301		※		B2	B5	※	S2	S1			※	M6	M8	F	22	25	T	E	III	14	✓	✓	18	12	8	I
			0	16	1.8	1.8	30310		※		B2	B5	※	S2	S1	S8		※	M6	M8	F		25	T	E		18	✓	✓	13	13	13	K
			0	32	1.2	0.7	30310		※		B2	B5	※	S2	S1	S8		※	M12	M5	F		25	T	E		18	✓	✓	13	13	13	K
			0	8	1.8	1.8	30301		※		B2	B5	※	S2	S1			※	M6	M8	F	22	25	T	E	III	14	✓	✓	18	12	8	J

Cable Entry	T	E									
		Ex d						Ex emb			
M20 x 1.5	19	39	87	M	S			58	M	S	58 L T M S
M25 x 1.5			87					58			58 L T
1/2" NPT	16	37	87	N	S			58	N	S	58 L T N S

※ = Do not specify when opted for. Refer Page # 22 for Value of ※
✓= Options available

Code	Construction Reference
I	309, 311
J	310, 312
K	313, 315
L	314, 316

	F
Flying lead IP54	※
Flying lead IP67	01

ORDERING CODE AND EXAMPLE

VALVE + SOLENOID

VALVE TYPE – SIL – SUFFIX – ORIFICE – PORT CONNECTION – BODY AND INTERNALS – MANUAL OVERRIDE – SEAL – MEDIA + SIZE – VOLTAGE – CURRENT – SOLENOID ENCLOSURE – SPECIAL VERSION – POWER – INSULATION – APPROVAL – SIL – ACCESSORIES SOLENOID

e.g. 30301-2.5-2G+I-24V-DC-22; 30310-3.5-2R-B5+II-24V-DC-37-H

Specifications are subject to change without notice.

3/2 DIRECT ACTING SOLENOID VALVE

DIMENSIONS

All Dimensions are in mm

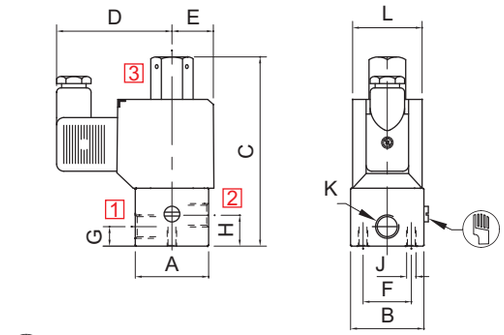

MANUAL OVERRIDE OPTIONALLY PROVIDED

PLUG IN SOLENOID TYPE 22

K (PORT SIZE)	A	B	C	D	E	F	G	H	J	L	BODY MATL.	CONST. REF.
VALVE TYPE : 30125												
1/8", 1/4"	38	38	98	60	25	25	10	16	M6	36	AL, BR	301
3/8", 1/2"	60	38	106	60	25	25	20.5	20.5	M6	36	AL, BR	302
1/8", 1/4"	44	Ø48	102	60	25	25	17	10.5	M6	36	SS	303
3/8", 1/2"	58	Ø62	111	60	25	25	14	14	M6	36	SS	304

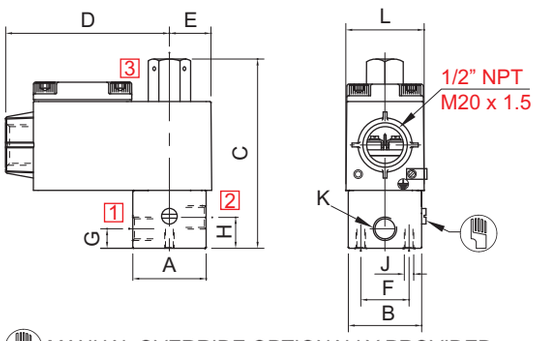

MANUAL OVERRIDE OPTIONALLY PROVIDED

TERMINAL BOX/ Ex d ENCLOSURE, TYPE 16, 19, 37, 39, 58, 58LT

K (PORT SIZE)	A	B	C	D	E	F	G	H	J	L	BODY MATL.	CONST. REF.
VALVE TYPE : 30125												
1/8", 1/4"	38	38	98	85	25	25	10	16	M6	41	AL, BR	301
3/8", 1/2"	60	38	106	85	25	25	20.5	20.5	M6	41	AL, BR	302
1/8", 1/4"	44	Ø48	102	85	25	25	17	10.5	M6	41	SS	303
3/8", 1/2"	58	Ø62	111	85	25	25	14	14	M6	41	SS	304

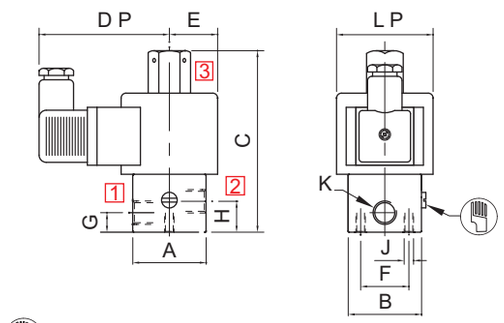

MANUAL OVERRIDE OPTIONALLY PROVIDED

SQUARE PLUG IN SOLENOID TYPE 25

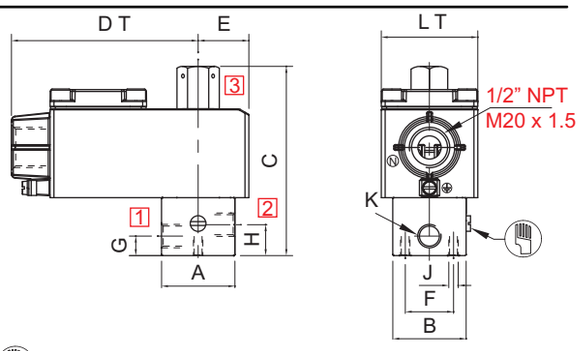

MANUAL OVERRIDE OPTIONALLY PROVIDED

TERMINAL BOX/ Ex d LARGE ENCLOSURE, TYPE 16, 19, 37, 39, 58, 58LT, LC

K (PORT SIZE)	A	B	C	D P	D T	E	F	G	H	J	L P	L T	BODY MATL.	CONST. REF.
VALVE TYPE : 30125														
1/8", 1/4"	38	38	98	66	97	25	25	10	16	M6	Ø50	50	AL, BR	301
3/8", 1/2"	60	38	106	66	97	25	25	20.5	20.5	M6	Ø50	50	AL, BR	302
1/8", 1/4"	44	Ø48	102	66	97	25	25	17	10.5	M6	Ø50	50	SS	303
3/8", 1/2"	58	Ø62	111	66	97	25	25	14	14	M6	Ø50	50	SS	304
VALVE TYPE : 30126														
1/8", 1/4"	50	50	110	68	103	25	25	10.5	17	M6	Ø50	50	AL, BR	305
3/8", 1/2"	65	50	110	68	103	32	25	14	14	M6	Ø50	50	AL, BR	306
1/8", 1/4"	44	Ø48	102	68	103	25	25	10.5	17	M6	Ø50	50	SS	307
3/8", ½"	58	Ø62	102	68	103	32	25	14	14	M6	Ø50	50	SS	308

ROTEX
Engineering For The Future

3/2 DIRECT ACTING SOLENOID VALVE

DIMENSIONS

All Dimensions are in mm

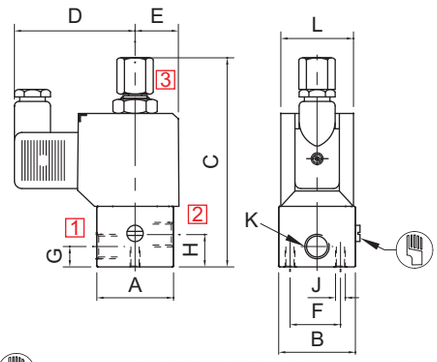

MANUAL OVERRIDE OPTIONALLY PROVIDED

PLUG IN SOLENOID TYPE 22

K (PORT SIZE)	A	B	C	D	E	F	G	H	J	L	BODY MATL.	CONST. REF.
VALVE TYPE : 30201, 30301												
1/8”, 1/4”	38	38	98	60	22	25	10	16	M6	36	AL, BR	309
3/8”, 1/2”	60	38	106	60	22	25	20.5	20.5	M6	36	AL, BR	310
1/8”, 1/4”	44	Ø48	102	60	22	25	17	10.5	M6	36	SS	311
3/8”, 1/2”	58	Ø62	111	60	22	25	14	14	M6	36	SS	312

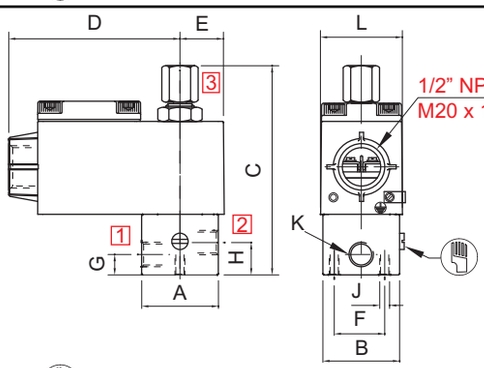

MANUAL OVERRIDE OPTIONALLY PROVIDED

TERMINAL BOX/ Ex d ENCLOSURE, TYPE 16, 19, 37, 39, 58, 58LT

K (PORT SIZE)	A	B	C	D	E	F	G	H	J	L	BODY MATL.	CONST. REF.
VALVE TYPE : 30201, 30301												
1/8”, 1/4”	38	38	102	85	22	25	10	16	M6	41	AL, BR	309
3/8”, 1/2”	60	38	106	85	22	25	20.5	20.5	M6	41	AL, BR	310
1/8”, 1/4”	44	Ø48	102	85	22	25	17	10.5	M6	41	SS	311
3/8”, 1/2”	58	Ø62	111	85	22	25	14	14	M6	41	SS	312

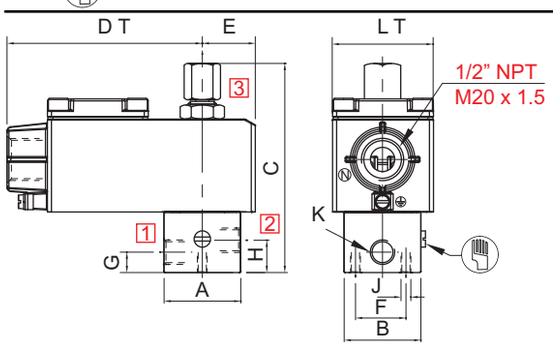

MANUAL OVERRIDE OPTIONALLY PROVIDED

TERMINAL BOX/ Ex d LARGE ENCLOSURE, TYPE 16, 19, 37, 39, 58, 58LT, LC

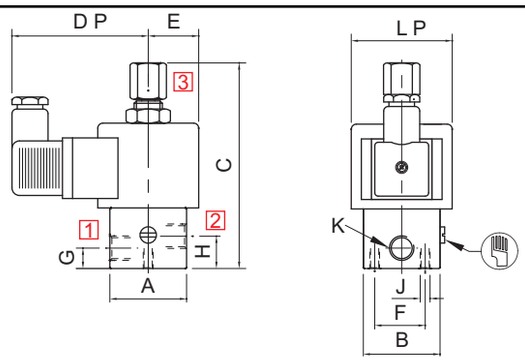

MANUAL OVERRIDE OPTIONALLY PROVIDED

SQUARE PLUG IN SOLENOID TYPE 25

K (PORT SIZE)	A	B	C	D T	D P	E	F	G	H	J	L P	L T	BODY MATL.	CONST. REF.
VALVE TYPE : 30201, 30301														
1/8”, 1/4”	38	38	98	97	66	26	25	10	16	M6	Ø50	50	AL, BR	309
3/8”, 1/2”	60	38	106	97	66	26	25	20.5	20.5	M6	Ø50	50	AL, BR	310
1/8”, 1/4”	44	Ø48	102	97	66	26	25	17	10.5	M6	Ø50	50	SS	311
3/8”, 1/2”	58	Ø62	111	97	66	26	25	14	14	M6	Ø50	50	SS	312
VALVE TYPE : 30206, 30310														
1/8”, 1/4”	50	50	124	103	68	28	25	10	17	M6	Ø50	50	AL, BR	313
3/8”, 1/2”	65	50	124	103	68	28	25	14	14	M6	Ø50	50	AL, BR	314
1/8”, 1/4”	50	50	124	103	68	28	25	10	17	M6	Ø50	50	SS	315
3/8”, 1/2”	65	50	124	103	68	28	25	14	14	M6	Ø50	50	SS	316

Specifications are subject to change without notice.

3/2 DIRECT ACTING, NORMALLY CLOSED SOLENOID VALVE

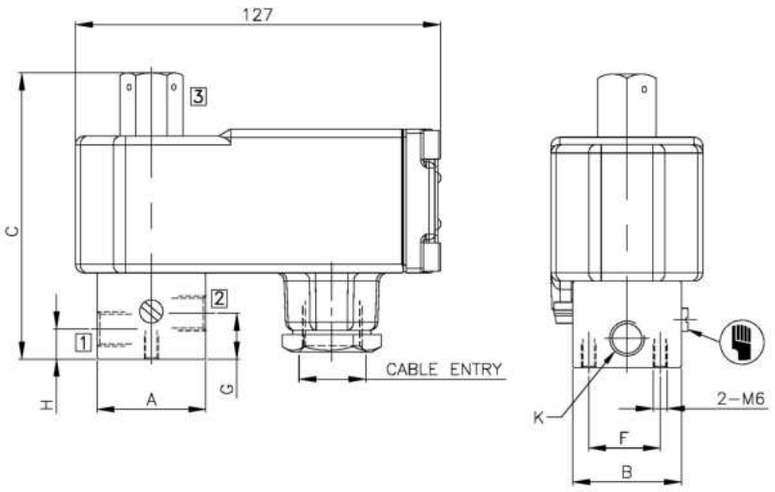

BCE SOLENOID/ Ex d TYPE 87

K (PORT SIZE)	A	B	C	F	G	H	BODY MATL.	CONST. REF.
VALVE TYPE : 30125								
1/8", 1/4"	38	38	100	25	16	10.5	AL, BR	301
3/8", 1/2"	60	38	108	25	20.5	20.5	AL, BR	302
1/8", 1/4"	44	Ø48	105	25	17	10.5	SS	303
3/8", 1/2"	58	Ø62	108	25	14	14	SS	304

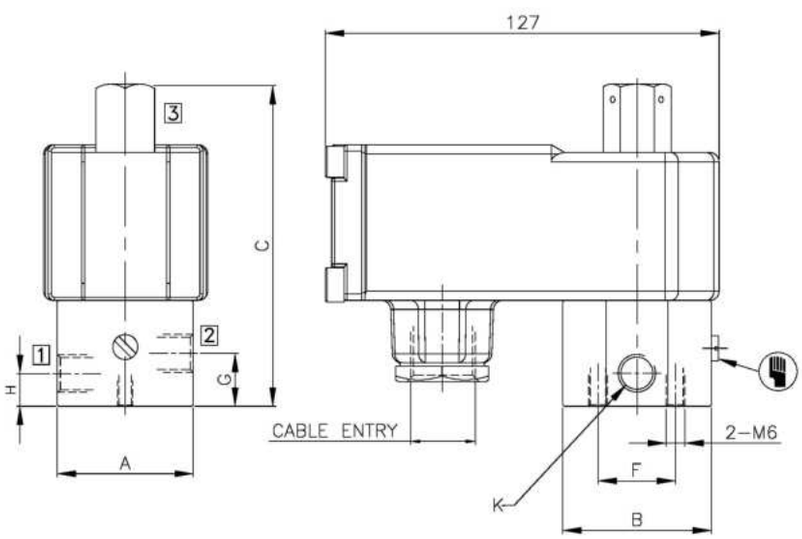

BCE SOLENOID/ Ex d TYPE 87

3/2 DIRECT ACTING NC GENERAL PURPOSE SOLENOID VALVE

TYPE	PRESSURE

TYPE	PRESSURE

TYPE	PRESSURE
301	0 - 10 bar
302	0 - 10 bar
303	0 - 10 bar

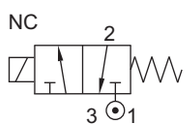



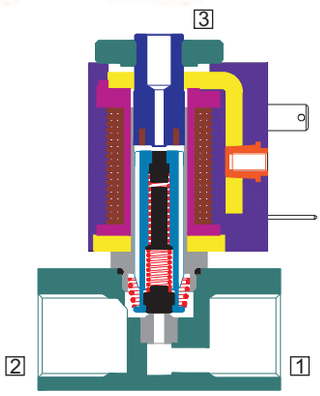

THIS MODEL IS DISCONTINUED.
OFFER ALTERNATE MODEL 30125.
CONTACT ROTEX IF MUST TO OFFER SPECIFIC

3/2 DIRECT MOUNT, DIRECT ACTING SOLENOID VALVE

TYPE	PRESSURE

TYPE	PRESSURE

TYPE	PRESSURE
305	0 - 10 bar

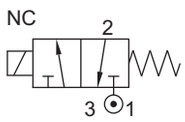

FEATURES

- Bubble tight shut off
- Mounts in any position
- Vibration resistance up to 9g
- Speed up to 1000 cycles/ min
- Ease of installation
- Life >10 million cycles

SM





WETTED PARTS

Code	※		
Body	Anodized Aluminium		
Internals	Aluminium		
Guide Assembly	Brass		
Shadow-Ring	Copper		
Plunger, Insert	SS 430		
Spring	SS 302		
Seat, Seals	NBR, Viton, EPDM		

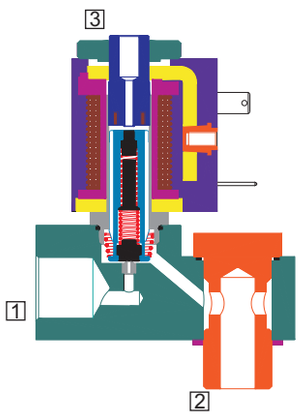

AMBIENT AND FLUID TEMPERATURE

-30 °C to 75 °C

SPECIAL VERSION AND SUFFIX

Suffix : (Valve) OX
Special version : (Solenoid)

MEDIA

Air, Inert Gases

APPLICATION

Single acting actuator/ Cylinder, control valve actuation.
Directly mounted on the Actuator, Angle seat valve operator

PORT CONNECTION

FUNCTION	INLET	OUTLET	EXHAUST
NC	1	2	3

SPARES (Refer page 25 for ordering code)

SPARE KIT	CODE
Seal Kit : Oring Set and Plunger Assembly	98
Repair Kit : Oring Set, Plunger Assembly, Springs, Guide Assembly	99
Solenoid Kit : Solenoid, Gasket	34

APPROVAL (* applied for)

Approval	TYPE 4X, 6P	IP67	Ex d IIC T4 or T5 or T6 IP66	Ex ia IIC T6 IP67	DGMS	CCOE
		✓				
CE		✓				
UL						

Contact Rotex for
- Any other ambient, fluid temperature, media and application

Valve supplied with gasket and Benjo fitting
Recommended for indoor installation.

CONTACT ROTEX BEFORE SELECTING THIS ITEM

Specifications are subject to change without notice.

ROTEX
Engineering For The Future

3/2 DIRECT MOUNT, DIRECT ACTING SOLENOID VALVE

SPECIFICATION

PORT CONNECTION			PRE-SSURE bar		ORIFICE (mm)	FLOW FACTOR kv (LPM OF WATER @ 1 bar ΔP)	VALVE TYPE	PILOT PRESSURE	BODY MATERIAL AND INTERNALS				SEALS					MANUAL OVERRIDE			SOLENOID ENCLOSURE						SUFFIX		POWER VA			CONSTRUCTION REFERENCE NUMBER
																					WEATHER PROOF			EXPLOSION PROOF								
SIZE	BSP(F)	NPT(F)	MINIMUM	MAXIMUM					ALUMINIUM	ALUMINIUM + SS	BRASS	SS 316/ CF8M	NBR	Viton	EPDM	HYTREL	PTFE	NIL	STAYPUT CUM MOMENTARY	MOMENTARY	FLYING LEAD	PLUG IN, IP67	SQ. PLUG IN, IP67	TERMINAL BOX IP67	FPJB Ex d IIC, T4 OR T6, IP67	LARGE ENCLOSURE	SOLENOID SIZE	OXYGEN	AMONIA	AC INRUSH	AC HOLDING	DC	
3/2 NORMALLY CLOSED																																
1/4”	2G		0	10	1.5	1.2	305A		※				※					※				22					8			12	6	5	321

※ = Do not specify when opted for. Refer Page # 22 for Value of ※
✓= Options available

ORDERING CODE AND EXAMPLE

VALVE + SOLENOID

TYPE - ORIFICE - PORT CONNECTION - SEAL - MEDIA +
VOLTAGE – CURRENT – SOLENOID ENCLOSURE
e.g. 304B+110V 50Hz-22; 305A-B5-S2+12V DC-22

DIMENSIONS

All Dimensions are in mm

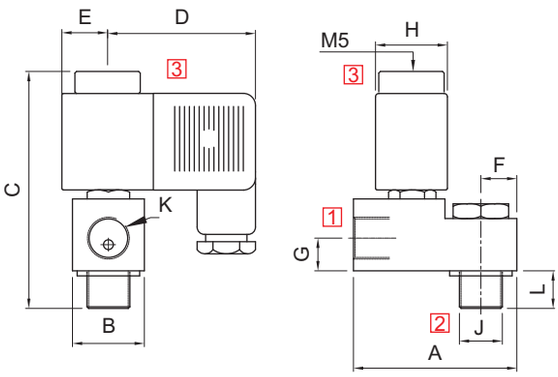

PLUG IN SOLENOID TYPE 22

K (PORT SIZE)	A	B	C	D	E	F	G	H	J	L	CONST. REF.
VALVE TYPE : 305A											
1/4”	50	22	71	49	11	11	10	22	1/4	12	321

MODEL 304 IS DISCONTINUED.
CONTACT ROTEX IF MUST TO OFFER SPECIFIC

CONTACT ROTEX BEFORE SELECTING THIS ITEM

Specifications are subject to change without notice.

3/2 DIRECT ACTING, ALL PORTS IN BODY SOLENOID VALVE

TYPE	PRESSURE
30370	0 - 12 bar

UNI

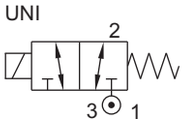

TYPE	PRESSURE
30270	0 - 20 bar

NO

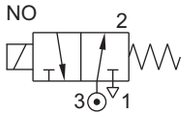

TYPE	PRESSURE
30170	0 - 20 bar

NC

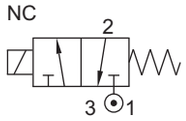

FEATURES

- Bubble tight shut off
- Mounts in any position
- Vibration resistance up to 6g
- Suitable for high speed cycling
- Speed up to 600 cycles/ min
- Life >10 million cycles
- Manual override optionally provided



WETTED PARTS

Code		B2	B5
Body		Brass	SS 316
Internals		Brass	SS 316
Guide Assembly	SS 304		
Shadow-Ring	Copper/ Silver/ None		
Plunger, Insert	SS 430		
Spring	SS 302		
Seat, Seals	NBR, Viton, EPDM		

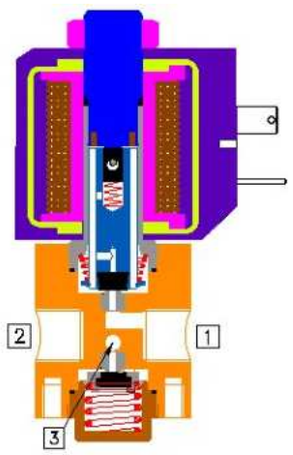

AMBIENT AND FLUID TEMPERATURE

-30 °C to 75 °C

SPECIAL VERSION AND SUFFIX

Suffix : (Valve) OX, AM
Special version : (Solenoid) CO, FR, SS, LC, III

MEDIA

Air, Inert Gases, Water, Free Flowing Liquid,
Oil, Diesel, Kerosene, LPG

APPLICATION

Single acting actuator/ Cylinder, control valve actuation
Diverting/ mixing of fluid

PORT CONNECTION

FUNCTION	INLET	OUTLET	EXHAUST
NC	1	2	3
NO	3	2	1
Mixing	1 and 3	2	
Diverting	2	1 and 3	

SPARES

(Refer page 25 for ordering code)

SPARE KIT	CODE
Seal Kit : Oring Set and Plunger Assembly	98
Repair Kit : Oring Set, Plunger Assembly, Springs, Manual Override, Guide Assembly	99
Solenoid Kit : Solenoid, Gasket	34

APPROVAL

(* applied for)

Approval	TYPE 4X, 6P	IP67	Ex d IIC T4 or T5 or T6 IP66	Ex ia IIC T6 IP67	DGMS	CCOE
ISI		✓	✓	✓	✓	✓
CE		✓	✓	✓		
UL	✓		*			
CMRI			✓	✓		
EAC			✓	✓		
IECEx			✓	✓		

Contact Rotex for
- Any other ambient, fluid temperature, media and application
- UL listed, c(UL)us Listed general purpose Valve

2/2 NC Type 30170TC, 30370TC OR 2/2 NO Type 30270TO, 30370TO
OIL Media Temperature Restricted from 0 °C to 100 °C

Specifications are subject to change without notice.

ROTEX
Engineering For The Future

3/2 DIRECT ACTING, ALL PORTS IN BODY SOLENOID VALVE

SPECIFICATION

PORT CONNECTION			PRE-SSURE bar		ORIFICE (mm)	FLOW FACTOR kv (LPM OF WATER @ 1 bar ΔP)	VALVE TYPE	PILOT PRESSURE	BODY MATERIAL AND INTERNALS				SEALS					MANUAL OVERRIDE			SOLENOID ENCLOSURE						SUFFIX		POWER VA			CONSTRUCTION REFERENCE NUMBER
																					WEATHER PROOF				EXPLOSION PROOF									
SIZE	BSP(F)	NPT(F)	MINIMUM	MAXIMUM					ALUMINIUM	ALUMINIUM + SS	BRASS (STD. PORT NPT)	SS 316 (STD. PORT NPT)	NBR	Viton	EPDM	HYTREL	PTFE	NIL	STAYPUT CUM MOMENTARY	MOMENTARY	FLYING LEAD	PLUG IN, IP67	SQ. PLUG IN, IP67	TERMINAL BOX IP67	EXPLOSION PROOF IIC, IP67	LARGE ENCLOSURE	SOLENOID SIZE	OXYGEN	AMONIA	AC INRUSH	AC HOLDING	DC	
3/2 NORMALLY CLOSED																																
1/4"	2G	2R	0	3	3.5	5	30170						B2	B5	※	S2	S1			※			22	25	T	E		14	✓	✓	18	12	8	322
			0	4	3	4	30170						B2	B5	※	S2	S1			※			22	25	T	E		14	✓	✓	18	12	8	322
			0	6	2.5	3.5	30170						B2	B5	※	S2	S1			※			22	25	T	E		14	✓	✓	18	12	8	322
			0	10	1.8	1.8	30170						B2	B5	※	S2	S1			※			22	25	T	E		14	✓	✓	18	12	8	322
			0	20	1.2	0.7	30170						B2	B5	※	S2	S1			※			22	25	T	E		14	✓	✓	18	12	8	322
3/2 NORMALLY OPEN																																
1/4"	2G	2R	0	3	3.5	5	30270						B2	B5	※	S2	S1			※			22	25	T	E		14	✓	✓	18	12	8	322
			0	4	3	4	30270						B2	B5	※	S2	S1			※			22	25	T	E		14	✓	✓	18	12	8	322
			0	6	2.5	3.5	30270						B2	B5	※	S2	S1			※			22	25	T	E		14	✓	✓	18	12	8	322
			0	10	1.8	1.8	30270						B2	B5	※	S2	S1			※			22	25	T	E		14	✓	✓	18	12	8	322
			0	20	1.2	0.7	30270						B2	B5	※	S2	S1			※			22	25	T	E		14	✓	✓	18	12	8	322
3/2 UNIVERSAL																																
1/4"	2G	2R	0	1	3.5	5	30370						B2	B5	※	S2	S1			※			22	25	T	E		14	✓	✓	18	12	8	322
			0	2	3	4	30370						B2	B5	※	S2	S1			※			22	25	T	E		14	✓	✓	18	12	8	322
			0	3	2.5	3.5	30370						B2	B5	※	S2	S1			※			22	25	T	E		14	✓	✓	18	12	8	322
			0	7	1.8	1.8	30370						B2	B5	※	S2	S1			※			22	25	T	E		14	✓	✓	18	12	8	322
			0	12	1.2	0.7	30370						B2	B5	※	S2	S1			※			22	25	T	E		14	✓	✓	18	12	8	322

| SOLENOID 14 | | | | | | | | | | | | | | | | | | |

3/2 DIRECT ACTING, ALL PORTS IN BODY SOLENOID VALVE

TYPE	PRESSURE
30372	0 - 10 bar

UNI

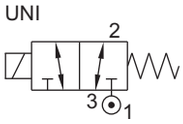

TYPE	PRESSURE
30272	0 - 16 bar

NO

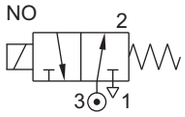

TYPE	PRESSURE
30172	0 - 16 bar

NC

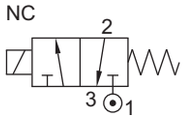

FEATURES

- Bubble tight shut off
- Mounts in any position
- Vibration resistance up to 6g
- Suitable for high speed cycling
- Speed up to 600 cycles/ min
- Life >10 million cycles
- Manual override optionally provided



WETTED PARTS

Code		B2	B5
Body		Brass	SS 316
Internals		Brass	SS 316
Guide Assembly	SS 304		
Shadow-Ring	Copper/ Silver/ None		
Plunger, Insert	SS 430		
Spring	SS 302		
Seat, Seals	NBR, Viton, EPDM		

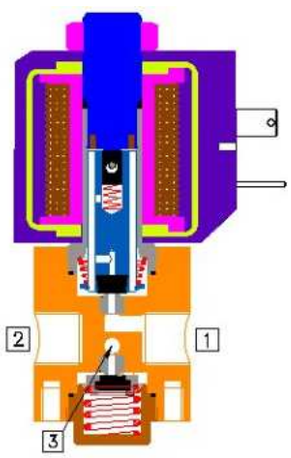

AMBIENT AND FLUID TEMPERATURE

-30 °C to 75 °C

SPECIAL VERSION AND SUFFIX

Suffix : (Valve) OX, AM, WO
Special version : (Solenoid) CO, FR, SS, LC, III

MEDIA

Air, Inert Gases, Water, Free Flowing Liquid,
Oil, Diesel, Kerosene, LPG

APPLICATION

Single acting actuator/ Cylinder, control valve actuation
Diverting/ mixing of fluid

PORT CONNECTION

FUNCTION	INLET	OUTLET	EXHAUST
NC	1	2	3
NO	3	2	1
Mixing	1 and 3	2	
Diverting	2	1 and 3	

SPARES (Refer page 25 for ordering code)

SPARE KIT	CODE
Seal Kit : Oring Set and Plunger Assembly	98
Repair Kit : Oring Set, Plunger Assembly, Springs, Manual Override, Guide Assembly	99
Solenoid Kit : Solenoid, Gasket	34

APPROVAL (* applied for)

Approval	TYPE 4X, 6P	IP67	Ex d IIC T4 or T5 or T6 IP66	Ex ia IIC T6 IP67	DGMS	CCOE
ISI		✓	✓	✓	✓	✓
CE		✓	✓	✓		
UL	✓		*			
CCC			✓	✓		
EAC			✓	✓		
IECEx			✓	✓		

Contact Rotex for
- Any other ambient, fluid temperature, media and application
- UL listed, c(UL)us Listed general purpose Valve

⚠ OIL Media Temperature Restricted from 0 °C to 100 °C

Specifications are subject to change without notice.

ROTEX
Engineering For The Future

3/2 DIRECT ACTING, ALL PORTS IN BODY SOLENOID VALVE

SPECIFICATION

PORT CONNECTION			PRE-SSURE bar							BODY MATERIAL AND INTERNALS				SEALS					MANUAL OVERRIDE			SOLENOID ENCLOSURE								SUFFIX		POWER VA			CONSTRUCTION REFERENCE NUMBER
																						WEATHER PROOF				EXPLOSION PROOF											
SIZE	BSP(F)	NPT(F)	MINIMUM	MAXIMUM	ORIFICE (mm)	FLOW FACTOR kv (LPM OF WATER @ 1 bar ΔP)	VALVE TYPE	PILOT PRESSURE	ALUMINIUM	ALUMINIUM + SS	BRASS (STD. PORT NPT)	SS 316 (STD. PORT NPT)	NBR	Viton	EPDM	HYTREL	Viton+PTFE	NIL	STAYPUT CUM MOMENTARY	MOMENTARY	FLYING LEAD	PLUG IN, IP67	SQ. PLUG IN, IP67	TERMINAL BOX IP67	FPJB Ex d IIC, T4 OR T6, IP67	LARGE ENCLOSURE	SOLENOID SIZE	OXYGEN	AMONIA	AC INRUSH	AC HOLDING	DC	

3/2 NORMALLY CLOSED

			0	8	3.5	5	30172		※		B2	B5	※	S2	S1			※					25	T	E		18	✓	✓	15	15	15	322
			0	12	3	4	30172		※		B2	B5	※	S2	S1			※					25	T	E		18	✓	✓	15	15	15	322
1/4”	2G	2R	0	16	2.5	3.5	30172		※		B2	B5	※	S2	S1			※					25	T	E		18	✓	✓	15	15	15	322
			0	32	1.8	1.8	30172		※		B2	B5	※	S2	S1			※					25	T	E		18	✓	✓	15	15	15	322
			0	63	1.2	0.7	30172		※		B2	B5					S8	※					25	T	E		18	✓	✓	15	15	15	322

3/2 NORMALLY OPEN

			0	8	3.5	5	30272		※		B2	B5	※	S2	S1			※					25	T	E		18	✓	✓	15	15	15	322
			0	6	3	4	30272		※		B2	B5	※	S2	S1			※					25	T	E		18	✓	✓	15	15	15	322
1/4”	2G	2R	0	10	2.5	3.5	30272		※		B2	B5	※	S2	S1			※					25	T	E		18	✓	✓	15	15	15	322
			0	15	1.8	1.8	30272		※		B2	B5	※	S2	S1			※					25	T	E		18	✓	✓	15	15	15	322
			0	63	1.2	0.7	30272		※		B2	B5					S8	※					25	T	E		18	✓	✓	15	15	15	322

3/2 UNIVERSAL

			0	4	3.5	5	30372		※		B2	B5	※	S2	S1			※					25	T	E		18	✓	✓	15	15	15	322
			0	6	3	4	30372		※		B2	B5	※	S2	S1			※					25	T	E		18	✓	✓	15	15	15	322
1/4”	2G	2R	0	8	2.5	3.5	30372		※		B2	B5	※	S2	S1			※					25	T	E		18	✓	✓	15	15	15	322
			0	16	1.8	1.8	30372		※		B2	B5	※	S2	S1			※					25	T	E		18	✓	✓	15	15	15	322
			0	32	1.2	0.7	30372		※		B2	B5	※	S2	S1			※					25	T	E		18	✓	✓	15	15	15	322

Cable Entry	T	E
M20 x 1.5	19	39
1/2” NPT	16	37

※ = Do not specify when opted for
✓= Options available

DIMENSIONS

All Dimensions are in mm

CONSTRUCTION REF 322

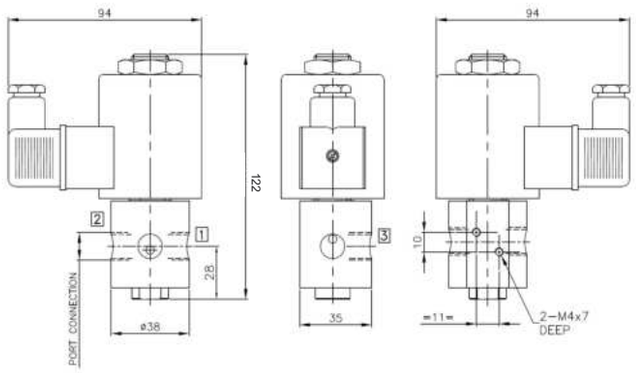

ORDERING CODE AND EXAMPLE

VALVE + SOLENOID

TYPE - SUFFIX - ORIFICE - PORT CONNECTION
BODY AND INTERNALS -SEAL- MEDIA + SIZE -
VOLTAGE - CURRENT - SOLENOID ENCLOSURE -
- SPECIAL VERSION - POWER - INSULATION - APPROVAL
e.g. 30172-2.5-2R-B5-S2+II-24V-DC-25-LW15-H

Specifications are subject to change without notice.

ROTEX
Engineering For The Future

3/2 DIRECT ACTING HIGH ORIFICE/ UNIVERSAL SOLENOID VALVE

TYPE	PRESSURE
20106	0 - 10 bar
20105	0 - 10 bar

2X2NC

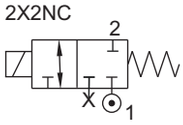

TYPE	PRESSURE
20206	0 - 10 bar
20205	0 - 10 bar

2X2NO

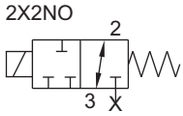

TYPE	PRESSURE
30308	0 - 10 bar
30309	0 - 10 bar
30329	0 - 16 bar
30333	0 - 10 bar

UNI

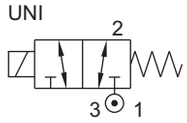



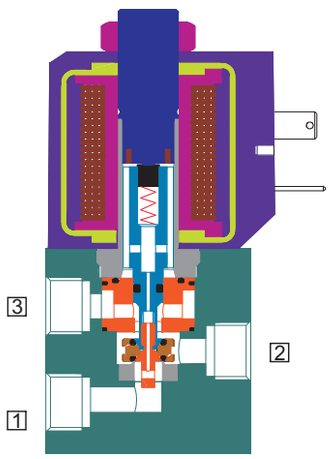

REFER CATALOGE BOOK OF

30308, 30309, 30329, 30333

SERIES : 32D

3/2 DIRECT ACTING HIGH ORIFICE / UNIVERSAL SOLENOID VALVE

TYPE	PRESSURE

TYPE	PRESSURE

TYPE	PRESSURE
30334	0 - 10 bar

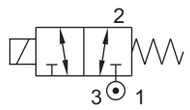





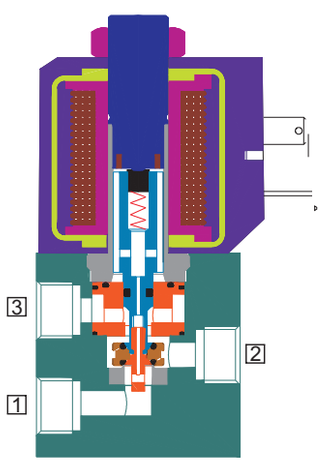

REFER CATALOGE BOOK OF
30334

7

SERIES : 32P

3/2 INTERNAL PILOT OPERATED, NORMALLY CLOSED/ OPEN POPPET SOLENOID VALVE

TYPE	PRESSURE

TYPE	PRESSURE
31209	2 - 10 bar
31210	3 - 20 bar
31206	3 - 40 bar

NO

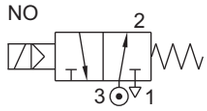

TYPE	PRESSURE
31119	2 - 10 bar
31120	3 - 20 bar
31121	3 - 40 bar

NC

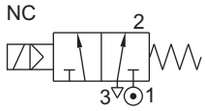





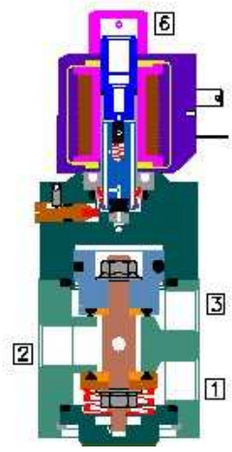

REFER CATALOGE BOOK OF

31119, 31120, 31121, 31209, 3

SERIES : 32P

3/2 INTERNAL PILOT OPERATED, NORMALLY CLOSED/ OPEN POPPET SOLENOID VALVE

TYPE	PRESSURE
33347	0.7-10.5 bar

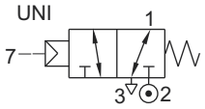

TYPE	PRESSURE
32347	0.7-10.5 bar

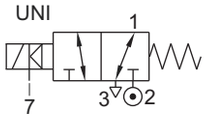

TYPE	PRESSURE
31147	0.7-10.5 bar

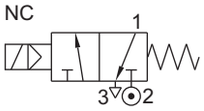

FEATURES

- Bubble tight shut off
- Mounts in any position
- Vibration resistance up to 9g
- Suitable for high speed cycling
- Speed up to 600 cycles/ min
- Life >10 million cycles



WETTED PARTS

Code	※	B1	B2	B5
Body	Anodized Aluminium	Anodized Aluminium	Brass	SS 316
Internals	Aluminium, Brass and SS 316	SS 316	Brass and SS 316	SS 316
Guide Assembly	SS 304			
Shadow-Ring	Copper/ Silver/ None			
Plunger, Insert	SS 430			
Spring/ Circlip	SS 302/ Steel			
Fasteners	SS 304			
Seat, Seals	NBR, Viton, F.Silicon			

AMBIENT AND FLUID TEMPERATURE

-30 °C to 75 °C

SPECIAL VERSION AND SUFFIX

Suffix : (Valve) OX, AM
Special version : (Solenoid) CO, FR, SS, LC, III

MEDIA

Air, Inert Gases

APPLICATION

Single acting actuator/ Cylinder, control valve actuation, ESD

PORT CONNECTION

FUNCTION	INLET	OUTLET	EXHAUST	PILOT EXHAUST	EXTERNAL PILOT
NC	2	1	3	6	7
NO	3	1	2	6	7

Contact Rotex for
- Any other ambient, fluid temperature, media and application
- UL listed, c UL Listed general purpose Valve
- Media like Water, Light Oil etc.

SPARES (Refer page 25 for ordering code)

SPARE KIT	CODE
Seal Kit : Oring Set and Plunger Assembly	98
Repair Kit : Oring Set, Plunger Assembly, Fastener, Springs, Manual Override Guide Assembly	99
Solenoid Kit : Solenoid, Gasket	34

APPROVAL (* applied for)

Approval	TYPE 4X, 6P	IP67	Ex d IIC T4 or T5 or T6 IP66	Ex ia IIC T6 IP67	DGMS	CCOE
		✓	✓	✓	✓	✓
CE		✓	✓	✓		
UL	✓		*			
CEPEL			✓	✓		
EAC			✓	✓		
IECEx			✓	✓		

The pressure drop at inlet port causes malfunction of the Valve. All equipment connected between the header and the inlet port should have a higher orifice kv value as compared to the solenoid Valve.

ROTEX
Engineering For The Future

3/2 INTERNAL PILOT OPERATED, NORMALLY CLOSED/ OPEN POPPET SOLENOID VALVE

SPECIFICATION

PORT CONNECTION			PRE-SSURE bar		ORIFICE (mm)	FLOW FACTOR kv (LPM OF WATER @ 1 bar ΔP)	VALVE TYPE	PILOT PRESSURE	BODY MATERIAL AND INTERNALS				SEALS					MANUAL OVERRIDE			SOLENOID ENCLOSURE								SUFFIX		POWER VA			CONSTRUCTION REFERENCE NUMBER
																					WEATHER PROOF				EXPLOSION PROOF										
SIZE	BSP(F)	NPT(F)	MINIMUM	MAXIMUM					ALUMINIUM	ALUMINIUM + SS	BRASS (STD. PORT NPT)	SS 316/ CF8M (STD. PORT NPT)	NBR	Viton	EPDM	HYTREL	PTFE	NIL	STAYPUT CUM MOMENTARY	MOMENTARY	FLYING LEAD	PLUG IN, IP67	SQ. PLUG IN, IP67	TERMINAL BOX IP67	FPJB Ex d IIC, T4 OR T6, IP67	LARGE ENCLOSURE	SOLENOID SIZE	OXYGEN	AMONIA	AC INRUSH	AC HOLDING	DC	
3/2 NORMALLY CLOSED																																	
1/4"	2G	2R	0.7	10.5	7	18	31147		※	B1	B2	B5	※	S2	S1			M0	※	M8	F	22	25	T	E	III	14		✓	18	12	8	
3/2 EXTERNAL UNIVERSAL																																	
1/4"	2G	2R	0.7	10.5	7	18	32347	2-10.5	※	B1	B2	B5	※	S2	S1			M0	※	M8	F	22	25	T	E	III	14		✓	18	12	8	
3/2 AIR OPERATED																																	
1/4"	2G	2R	0.7	10.5	7	18	33347	2-10.5	※	B1	B2	B5	※	S2	S1																		

ORDERING CODE AND EXAMPLE

VALVE + SOLENOID

TYPE - SUFFIX - ORIFICE - PORT CONNECTION - BODY AND INTERNALS - MANUAL OVERRIDE - SEAL- MEDIA + SIZE - VOLTAGE - CURRENT - SOLENOID ENCLOSURE - SPECIAL VERSION - INSULATION - APPROVAL

e.g. 31147-7-2R-B5-S2+III-24V-DC-37-H

Cable Entry	T	E										
		Ex d			Ex a		Ex emb					
M20 x 1.5	19	39	87	MS		58	MS	58	LT	MS		
M25 x 1.5			87			58		58	LT			
1/2" NPT	16	37	87	NS		58	NS	58	LT	NS		

※ = Do not specify when opted for
✓= Options available

Specifications are subject to change without notice.

ROTEX
Engineering For The Future

3/2 INTERNAL PILOT OPERATED, UNIVERSAL POPPET SOLENOID VALVE

TYPE	PRESSURE

TYPE	PRESSURE
31301	2- 8 bar

NO

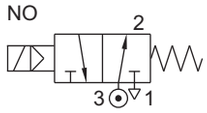

TYPE	PRESSURE
31301	2- 8 bar

NC

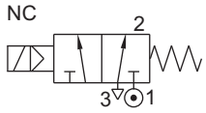



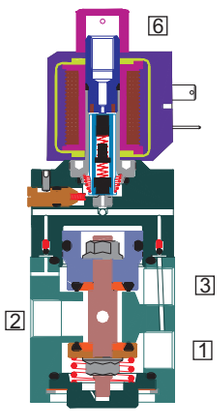

THIS MODEL IS DISCONTINUED.
OFFER ALTERNATE MODEL 32301.
CONTACT ROTEX IF MUST TO OFFER SPECIFI

ROTEX
Engineering For The Future

3/2 EXTERNAL PILOT OPERATED, UNIVERSAL POPPET SOLENOID VALVE

TYPE	PRESSURE

TYPE	PRESSURE

TYPE	PRESSURE
32301	0 - 20 bar

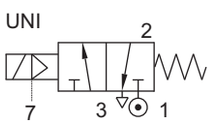



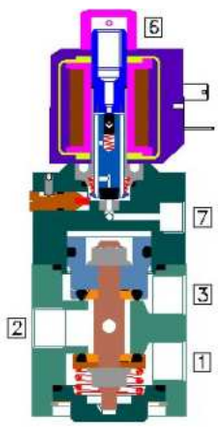

REFER CATALOGE BOOK OF 32301

ROTEX
Engineering For The Future

3/2 AIR OPERATED SPRING RETURN VALVE

TYPE	PRESSURE

TYPE	PRESSURE

TYPE	PRESSURE
33101	0 - 20 bar

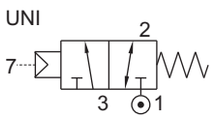

FEATURES

- Highly reliable rugged construction
- Positive Sealing and snap operation with poppet design
- Bubble tight shut off
- Vibration resistance up to 9g
- Can be used as NC/ NO/ Diverting/ Mixing
- Can be mounted in any position
- Life >10 million cycles
- Speed up to 600 cycles/ min.



WETTED PARTS

Code	※	B1	B2	B5
Body	Anodized Aluminium	Anodized Aluminium	Brass	SS 316
Internals	Aluminium, Brass and SS 316	SS 316	Brass and SS 316	SS 316
Spring/ Circlip	SS 302/ Steel Plated			
Fasteners	SS 304			
Seat, Seals	NBR, Viton			

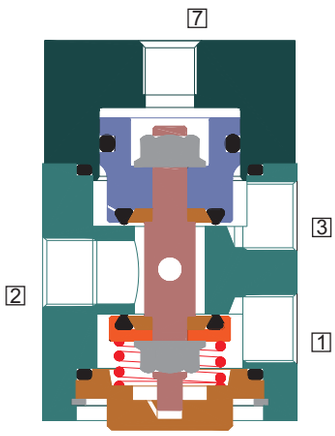

AMBIENT AND FLUID TEMPERATURE

-30 °C to 75 °C

SPECIAL VERSION AND SUFFIX

Suffix : (Valve) OX, AM

MEDIA

Air, Inert Gases, Water, Vacuum, Free Flowing Liquid, Oil, Diesel, Kerosene, LPG, Furnace Oil

APPLICATION

Quick operation of cylinder Actuator

SPARES (Refer page 25 for ordering code)

SPARE KIT	CODE
Seal Kit : Oring Set	98
Repair Kit : Oring Set, Fastener, Springs	99

PORT CONNECTION

	INLET	OUTLET	EXHAUST	EXTERNAL PILOT INLET
NC	1	2	3	7
NO	3	2	1	7
Diverting	2	1 and 3	-	7
Mixing	1 and 3	2	-	7

Contact Rotex for
- Any other ambient, fluid temperature, media and application

When valve is used for NC/ NO application, the Pilot pressure should be minimum 2 bar or ≥ main fluid pressure whichever is higher.
When valve is used for diverting/ mixing application, the pilot pressure should be at least 2 bar higher than main fluid pressure.
OIL Media Temperature Restricted from 0 °C to 100 °C

Specifications are subject to change without notice.

ROTEX
Engineering For The Future

3/2 AIR OPERATED SPRING RETURN VALVE

SPECIFICATION

PORT CONNECTION			PRE-SSURE bar		ORIFICE (mm)	FLOW FACTOR kv (LPM OF WATER @ 1 bar ΔP)	VALVE TYPE	PILOT PRESSURE	BODY MATERIAL AND INTERNALS				SEALS					MANUAL OVERRIDE			SOLENOID ENCLOSURE							SUFFIX		POWER VA			CONSTRUCTION REFERENCE NUMBER
																					WEATHER PROOF				EXPLOSION PROOF									
SIZE	BSP(F)	NPT(F)	MINIMUM	MAXIMUM					ALUMINIUM	ALUMINIUM + SS	BRASS (STD. PORT NPT)	SS 316 (STD. PORT NPT)	NBR	Viton	EPDM	HYTREL	PTFE	NIL	STAYPUT CUM MOMENTARY	MOMENTARY	FLYING LEAD	PLUG IN, IP67	SQ. PLUG IN, IP67	TERMINAL BOX IP67	FP JB Ex d IIC, T4 OR T6, IP67	LARGE ENCLOSURE	SOLENOID SIZE	OXYGEN	AMONIA	AC INRUSH	AC HOLDING	DC	
3/2 UNIVERSAL																																
1/4”	2G	2R	0	20	7	18	33101	2-20	※	B1	B2	B5	※	S2	S1													✓					355
3/8”	3G	3R	0	20	7	18	33101	2-20	※	B1	B2	B5	※	S2	S1													✓					359
			0	20	10	38	33101	2-20	※	B1	B2	B5	※	S2	S1													✓					356
1/2”	4G	4R	0	20	7	18	33101	2-20	※	B1	B2	B5	※	S2	S1													✓					360
			0	20	16	75	33101	2-20	※	B1	B2	B5	※	S2	S1													✓					357
3/4”	6G	6R	0	20	20	110	33101	2-20	※	B1		B5	※	S2	S1													✓					358
1”	8G	8R	0	20	25	185	33101	2-20	※	B1		B5	※	S2	S1													✓					362

※ = Do not specify when opted for. Refer Page # 22 for Value of ※

* Valve type printed in red colour is external pilot air/ air operated valve

ORDERING CODE AND EXAMPLE

VALVE

TYPE – SUFFIX – ORIFICE – PORT CONNECTION – BODY AND INTERNALS – SEAL - MEDIA

e.g. 33101-10-3R-B5

DIMENSIONS

All Dimensions are in mm

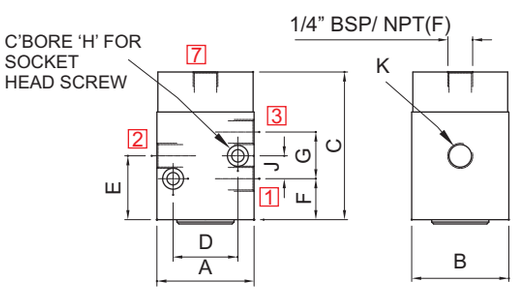

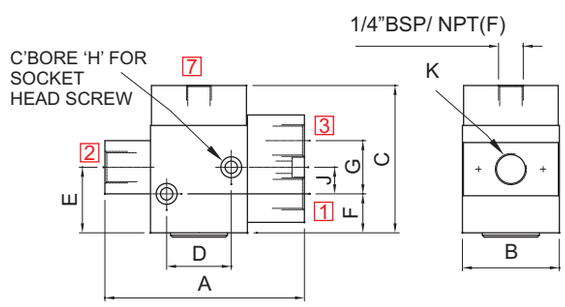

NW	K (PORT SIZE)	A	B	C	D	E	F	CONST. REF.
VALVE TYPE : 33101								
7	1/4”	51	51	77	34	21	25	355
10	3/8”	61	61	90	36	23	27	356
16	1/2”	81	81	111	48	30	36	357
20	3/4”	94	81	128	58	31	49	358

NW	K (PORT SIZE)	A	B	C	D	E	F	CONST. REF.
VALVE TYPE : 33101								
7	3/8”	111	51	77	34	21	25	359
7	1/2”	111	51	77	34	21	25	360
10	1/2”	121	61	90	36	23	27	361
25	1”	141	81	128	58	31	49	362

Specifications are subject to change without notice.

3/2 LARGE ORIFICE VALVE

TYPE	PRESSURE
33101	0 - 10 bar

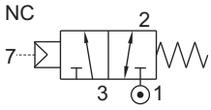

TYPE	PRESSURE
32101	0 - 10 bar

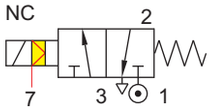

TYPE	PRESSURE
31119	2 - 10 bar

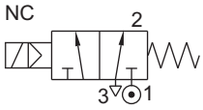



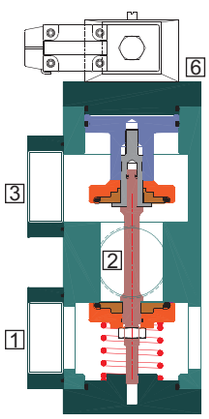

THIS MODEL IS DISCONTINUED.
OFFER ALTERNATE MODEL 51440TC, 57440TC
CONTACT ROTEX IF MUST TO OFFER SPECIFIC

3/2 DIRECT ACTING, NC/ NO HIGH PRESSURE (150 bar) SOLENOID VALVE

TYPE	PRESSURE

TYPE	PRESSURE
30252	0 - 150 bar

NO

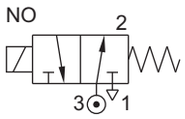

TYPE	PRESSURE
30152V01	0 - 150 bar
30152V02	0 - 150 bar

NC

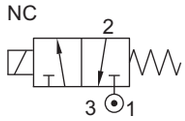

FEATURES

- Bubble tight shut off
- Mounts in any position
- Suitable for Vacuum up to 10^{-6} torr
- Vibration resistance up to 9g
- Suitable for high speed cycling
- Speed up to 300 cycles/ min
- Life >10 million cycles
- Manual override optionally provided



WETTED PARTS

Code	※		B5
Body	Anodized Aluminium		SS 316
Internals	Aluminium		SS 316
Guide Assembly	SS 304		
Shadow-Ring	None		
Plunger, Insert	SS 430		
Spring	SS 302		
Seat, Seals	PTFE + Viton GLT		
Fastener	SS 304		

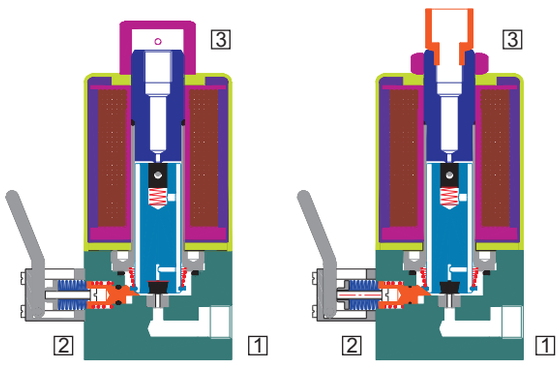

AMBIENT TEMPERATURE

-30 ºC to 75 ºC

SPECIAL VERSION AND SUFFIX

Suffix : (Valve) AM
Special version : (Solenoid) CO, FR, SS, LC

MEDIA

Air, Inert Gases

APPLICATION

High Pressure Application

PORT CONNECTION

FUNCTION	INLET	OUTLET	EXHAUST
NC	1	2	3
NO	3	2	1

SPARES (Refer page 25 for ordering code)

SPARE KIT	CODE
Seal Kit : Oring Set and Plunger Assembly	98
Repair Kit : Oring Set, Plunger Assembly, Springs, Manual Override, Guide Assembly	99
Solenoid Kit : Solenoid, Gasket	34

APPROVAL (★ applied for)

Approval	TYPE 4X, 6P	IP67	Ex d IIC T4 or T5 or T6 IP66	Ex ia IIC T6 IP67	DGMS	CCOE
ISI		✓	✓	✓	✓	✓
CE		✓	✓	✓		
UL	✓		*			
CCVCEPEL			✓	✓		
EAC			✓	✓		
IECEx			✓	✓		

Contact Rotex for
- Any other ambient, fluid temperature, media and application
- Media like Water, Light Oil etc.

ROTEX
Engineering For The Future

3/2 DIRECT ACTING, NC/ NO HIGH PRESSURE (150 bar) SOLENOID VALVE

SPECIFICATION

PORT CONNECTION			PRE-SSURE bar						BODY MATERIAL AND INTERNALS				SEALS					MANUAL OVERRIDE			SOLENOID ENCLOSURE WEATHER PROOF				SOLENOID ENCLOSURE EXPLOSION PROOF			SUFFIX		POWER VA			
SIZE	BSP(F)	NPT(F)	MINIMUM	MAXIMUM	ORIFICE (mm)	FLOW FACTOR kv (LPM OF WATER @ 1 bar ΔP)	VALVE TYPE	PILOT PRESSURE	ALUMINIUM+SS	ALUMINIUM	BRASS (STD. PORT NPT)	SS 316 (STD. PORT NPT)	NBR	Viton	EPDM	HYTREL	Viton GLT+PTFE	NIL	STAYPUT CUM MOMENTARY	MOMENTARY	FLYING LEAD	PLUG IN, IP67	SQ. PLUG IN, IP67	TERMINAL BOX IP67	FPJB Ex d IIC, T4 OR T6, IP67	LARGE ENCLOSURE	SOLENOID SIZE	OXYGEN	AMONIA	AC INRUSH	AC HOLDING	DC	CONSTRUCTION REFERENCE NUMBER
3/2 NORMALLY CLOSED																																	
1/4"		2R	0	150	0.8	0.6	30152V01			※		B5					S21	※		M4			25	T	E		18		✓	11	11	11	363
1/4"		2R	0	150	0.8	0.6	30152V02			※		B5					S21	※		M4			25	T	E		18		✓	8	8	8	363
3/2 NORMALLY OPEN																																	
1/4"	2G	2R	0	150	0.8	0.6	30252			※		B5					S21	※		M4			25	T	E		18		✓	13	13	13	363

SOLENOID 18						
Cable Entry	T	E				
		Ex d			Ex emb	
M20 x 1.5	19 17 MS	39 87 MS		58 MS	58 LT MS	
M25 x 1.5	17	87		58	58 LT	
1/2" NPT	16 17 NS	37 87 NS		58 NS	58 LT NS	

※ = Do not specify when opted for. Refer Page # 22 for Value of ※
✓= Options available

ORDERING CODE AND EXAMPLE

VALVE + SOLENOID

VALVE TYPE – SUFFIX – ORIFICE – PORT CONNECTION – BODY AND INTERNALS – MANUAL OVERRIDE – SEAL - MEDIA + SIZE – VOLTAGE – CURRENT – SOLENOID ENCLOSURE – SPECIAL VERSION – POWER – INSULATION – APPROVAL

e.g. 30152V01-0.8-2R-B5-S21-M4+II-230V-AC/DC-25-RC-LW11-H

DIMENSIONS

All Dimensions are in mm

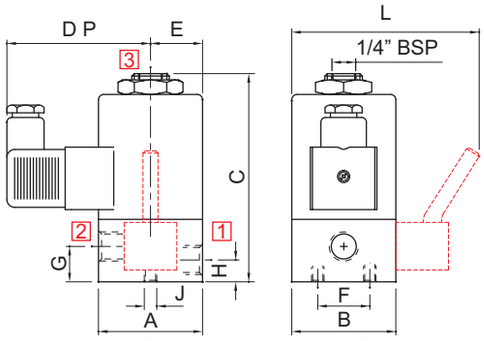

MANUAL OVERRIDE OPTIONALLY PROVIDED

SQ. PLUG IN SOLENOID TYPE 25

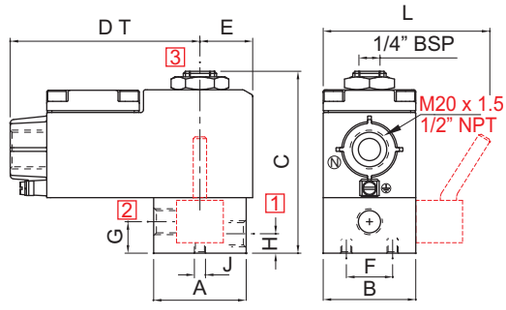

MANUAL OVERRIDE OPTIONALLY PROVIDED

TERMINAL BOX/Ex d TYPE 16, 19, 37, 39,58, 58LT, LC

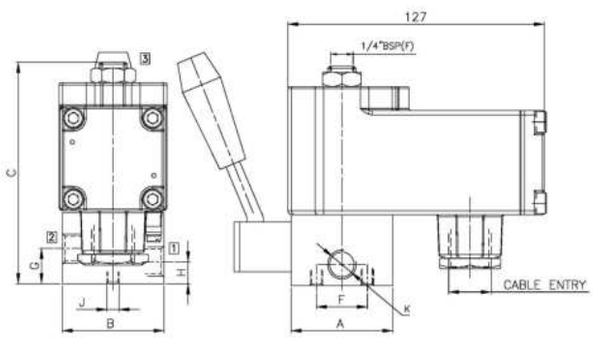

BCE SOLENOID/ Ex d TYPE 87

K (PORT SIZE)	A	B	C	D P	D T	E	F	G	H	J	L	CONST. REF.
VALVE TYPE : 30152V01 (WITH MA)												
1/4"	50	50	106	68	103	25	25	17	11	M6	90	363
VALVE TYPE : 30152 V01												
1/4"	50	50	106	68	103	25	25	17	11	M6	Ø50	363

Specifications are subject to change without notice.

3/2 INTERNAL PILOT OPERATED, NC/ NO HIGH PRESSURE SOLENOID VALVE

TYPE	PRESSURE

TYPE	PRESSURE
31207	4 - 70 bar

NO

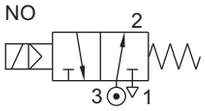

TYPE	PRESSURE
31122	4 - 70 bar

NC

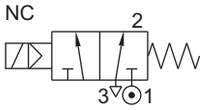

FEATURES

- Bubble tight shut off
- Mounts in any position
- Vibration resistance up to 9g
- Suitable for high speed cycling
- Speed up to 300 cycles/ min
- Life >3 million cycles
- Manual override optionally provided



WETTED PARTS

Code	B2	※
Body		SS 316
Internals		SS 316
Guide Assembly	SS 304	
Shadow-Ring	None	
Plunger, Insert	SS 430	
Spring	SS 302	
Seat, Seals	PTFE + Viton	
Fasteners	SS 304	

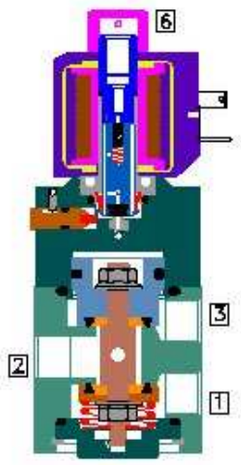

AMBIENT AND FLUID TEMPERATURE

-30 °C to 75 °C

SPECIAL VERSION AND SUFFIX

Suffix : (Valve) AM
Special version : (Solenoid) CO, FR, SS, LC

MEDIA

Air, Inert Gases

APPLICATION

Single acting actuator/ Cylinder, Control valve actuation

PORT CONNECTION

FUNCTION	INLET	OUTLET	EXHAUST	PILOT EXHAUST
NC	1	2	3	6
NO	3	2	1	6

Contact Rotex for
- Any other ambient, fluid temperature, media and application
- SIL3 approved valve
- Media like Water, Light Oil etc.

SPARES (Refer page 25 for ordering code)

SPARE KIT	CODE
Seal Kit : Oring Set and Plunger Assembly	98
Repair Kit : Oring Set, Plunger Assembly, Fasteners, Springs, Manual Override, Piston Kit	99
Solenoid Kit : Solenoid, Gasket	34

APPROVAL (* applied for)

Approval	TYPE 4X, 6P	IP67	Ex d IIC T4 or T5 or T6 IP66	Ex ia IIC T6 IP67	DGMS	CCOE
		✓	✓	✓	✓	✓
CE		✓	✓	✓		
UL	✓		*			
CCEPEL			✓	✓		
PESO			✓	✓		
IECEx			✓	✓		

7

ROTEX
Engineering For The Future

3/2 INTERNAL PILOT OPERATED NC/ NO HIGH PRESSURE SOLENOID VALVE

SPECIFICATION

PORT CONNECTION			PRE-SSURE bar		ORIFICE (mm)	FLOW FACTOR kv (LPM OF WATER @ 1 bar ΔP)	VALVE TYPE	PILOT PRESSURE	BODY MATERIAL AND INTERNALS				SEALS					MANUAL OVERRIDE			SOLENOID ENCLOSURE							SUFFIX		POWER VA			CONSTRUCTION REFERENCE NUMBER
																					WEATHER PROOF				EXPLOSION PROOF									
SIZE	BSP(F)	NPT(F)	MINIMUM	MAXIMUM					ALUMINIUM	ALUMINIUM + SS	BRASS (STD. PORT NPT)	SS 316/ CF8M (STD. PORT NPT)	NBR	Viton	EPDM	F.Silicon	PTFE+Viton	NIL	STAYPUT CUM MOMENTARY	MOMENTARY	FLYING LEAD	PLUG IN, IP67	SQ. PLUG IN, IP67	TERMINAL BOX IP67	EXPLOSION PROOF IIC, IP67	LARGE ENCLOSURE	SOLENOID SIZE	OXYGEN	AMONIA	AC INRUSH	AC HOLDING	DC	
3/2 NORMALLY CLOSED																																
1/4"	2G	2R	4	70	7	18	31122					B5					S8	※	M11	M4			25	T	E		18		✓	13	13	13	372
3/8"	3G	3R	4	70	10	38	31122					B5					S8	※	M11	M4			25	T	E		18		✓	13	13	13	373
1/2"	4G	4R	4	70	16	75	31122					B5					S8	※	M11	M4			25	T	E		18		✓	13	13	13	374
3/4"	6G	6R	4	70	20	110	31122					B5					S8	※	M11	M4			25	T	E		18		✓	13	13	13	375
1"	8G	8R	4	70	25	185	31122					B5					S8	※	M11	M4			25	T	E		18		✓	13	13	13	376
3/2 NORMALLY OPEN																																
1/4"	2G	2R	4	70	7	18	31207					B5					S8	※	M11	M4			25	T	E		18		✓	13	13	13	372
3/8"	3G	3R	4	70	10	38	31207					B5					S8	※	M11	M4			25	T	E		18		✓	13	13	13	373
1/2"	4G	4R	4	70	16	75	31207					B5					S8	※	M11	M4			25	T	E		18		✓	13	13	13	374
3/4"	6G	6R	4	70	20	110	31207					B5					S8	※	M11	M4			25	T	E		18		✓	13	13	13	375
1"	8G	8R	4	70	25	185	31207					B5					S8	※	M11	M4			25	T	E		18		✓	13	13	13	376

SOLENOID 18		
Cable Entry	T	E
		Ex d / Ex emb
M20 x 1.5	19 17 M S	39 87 M S / 58 M S
M25 x 1.5	17	87 / 58
1/2" NPT	16 17 N S	37 87 N S / 58 N S

※ = Do not specify when opted for. Refer Page # 22 for Value of ※
✓= Options available

ORDERING CODE AND EXAMPLE

VALVE + SOLENOID

VALVE TYPE - SUFFIX - ORIFICE - PORT CONNECTION
BODY AND INTERNALS - MANUAL OVERRIDE - SEAL - MEDIA + SIZE - VOLTAGE - CURRENT - SOLENOID ENCLOSURE - SPECIAL VERSION - POWER - INSULATION - APPROVAL

e.g. 31122-10-3R-B5-S8+II-110V-DC-39-H

DIMENSIONS

All Dimensions are in mm

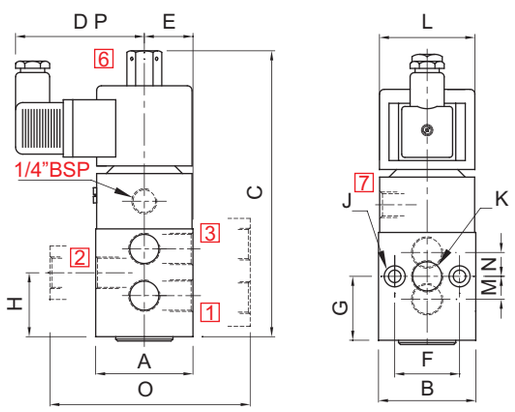

PLUG IN SOLENOID TYPE 25

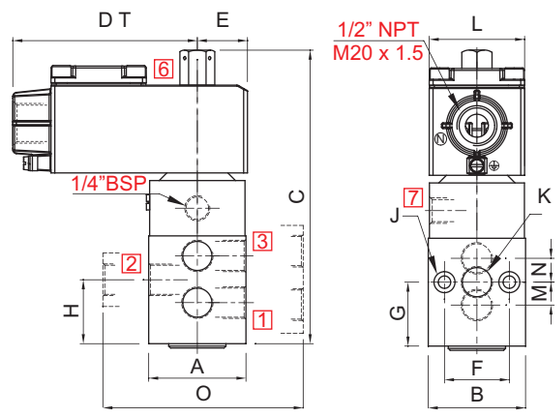

TERMINAL BOX/ Ex d LARGE ENCLOSURE, TYPE 16, 19, 37, 39, 58, 58LT

K (PORT SIZE)	A	B	C	D P	D T	E	F	G	H	J	L P	L T	M	N	CONST. REF.
VALVE TYPE : 31122, 31207															
1/4"	51	51	154	68	97	26	34	34	34	M6	Ø50	50	12	12	372
3/8"	61	61	165	68	97	30	34	36	36	M6	Ø50	50	14	14	373
1/2"	81	81	187	68	97	40	50	48	48	M8	Ø50	50	18	18	374
3/4"	94	81	204	68	97	40	50	58	58	M8	Ø50	50	24	24	375
1"	115	128	217	68	97	40	60	58	58	M8	Ø50	50	24	24	376

Specifications are subject to change without notice.

5 PORT VALVE

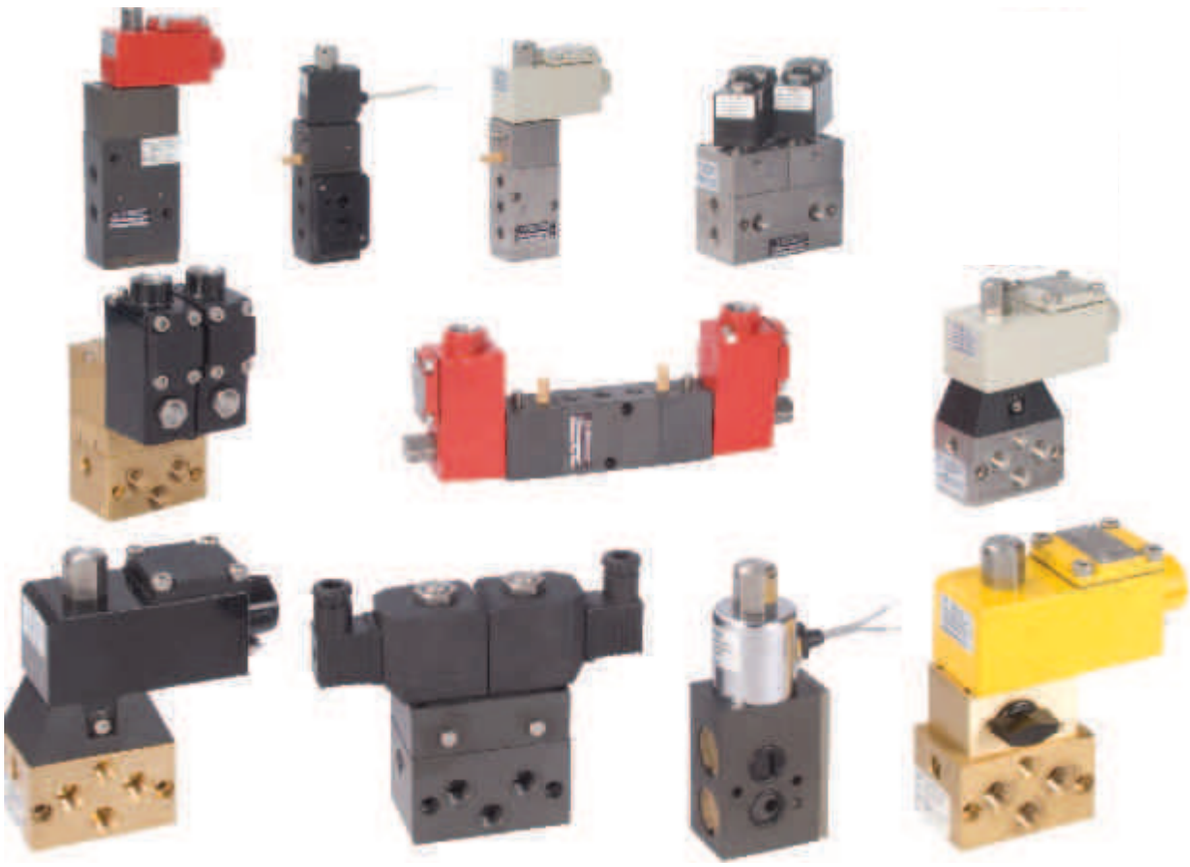

TYPE	ACTION	ORIFICE	PRESSURE	PAGE NO.	ACTION	NW	PRESSURE	PAGE NO.
	5/2 SINGLE SOLENOID/ AIR OPERATED VALVE				5/2 DOUBLE SOLENOID/ AIR OPERATED VALVE			
Solenoid Internal Pilot	Single	6 To 25	2 - 35	155	Double	6 To 25	2 - 35	159
Solenoid Internal Pilot In Line Poppet	Single	6 To 25	2 - 16	163	Double	6 To 25	2 - 16	165
Air Operated	Spring Return	6 To 25	0 - 40	167	-	-	-	-
Air Operated In Line Poppet	Spring Return	6 To 25	0 - 16	169	-	-	-	169
Solenoid Internal Pilot Large Orifice	Single	40, 50	2 - 10	171	Double	40, 50	2 - 10	171
Air Operated Spring Return Large Orifice	Single	40, 50	0 - 10	171	-	-	-	-
Solenoid Internal Pilot High Pressure	Single	6 To 25	4 - 70	173	Double	6 To 25	4 - 70	173

TYPE	ACTION	NW	PRESSURE	PAGE NO.
	5/3 SOLENOID VALVE			
Center OFF	Center OFF	6 To 25	2 - 10	177
Center Pressurized Double Solenoid	Center Pressurized	6 To 25	2 - 10	179
Center Exhaust Double Solenoid	Center Exhaust	6 To 25	2 - 10	179

Specifications are subject to change without notice.

5/2, 5/3 SOLENOID VALVE

SOLENOID INTERCHANGEABILITY

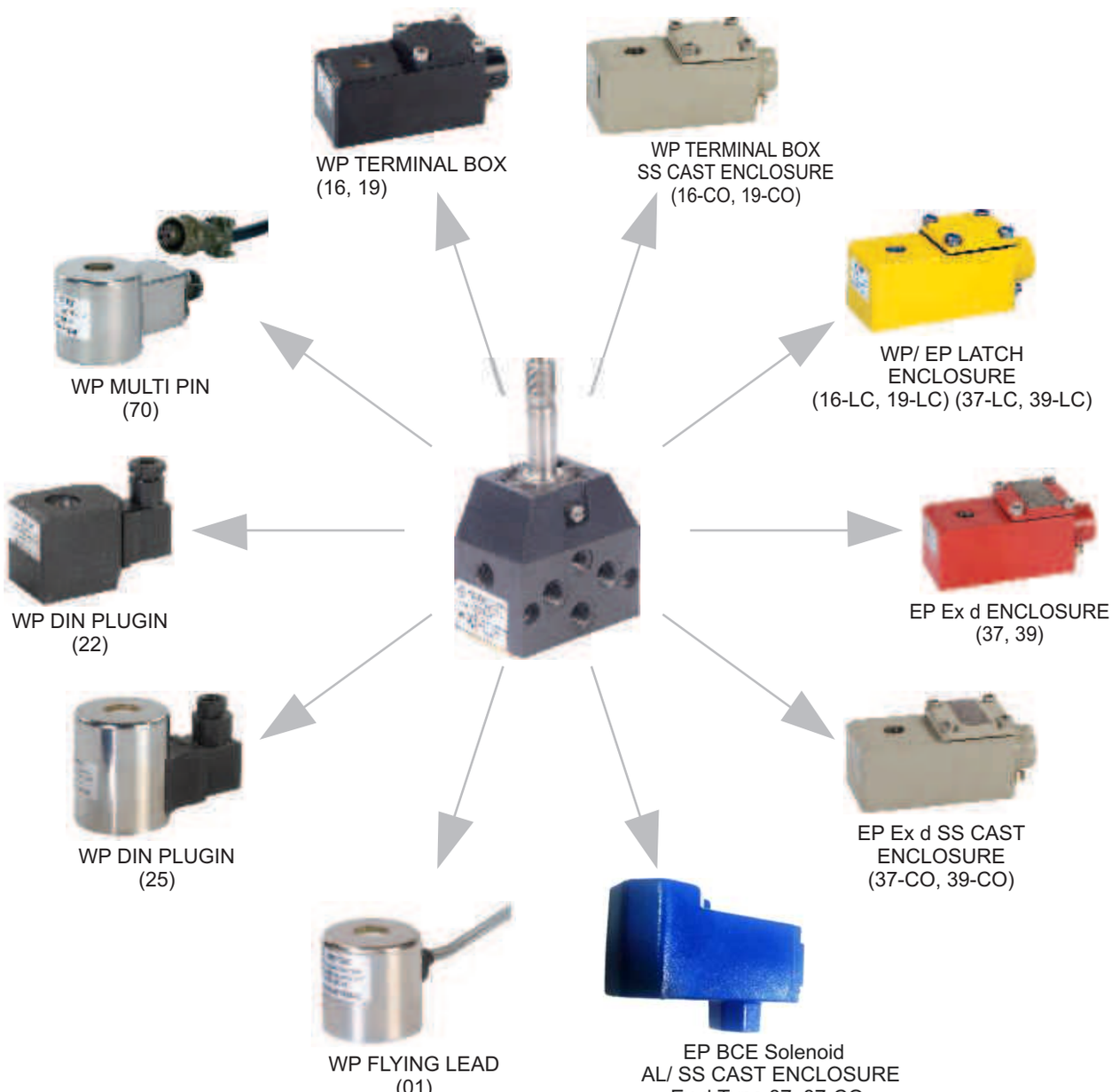

WP : WEATHER PROOF
EP : EXPLOSION PROOF

ROTEX FIVE PORT VALVE PROVIDES INTERCHANGEABILITY FOR VARIOUS SOLENOID ENCLOSURES, VOLTAGE AND CURRENT WITHOUT AFFECTING ITS PERFORMANCE.

ROTEX
Engineering For The Future

5/2 INTERNAL PILOT OPERATED, SINGLE SOLENOID POPPET VALVE

TYPE	PRESSURE
52433	0 - 20 bar

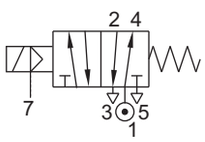

TYPE	PRESSURE
51432	2 - 10 bar
51433	3 - 20 bar
51434	3 - 40 bar

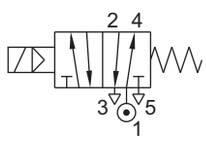

TYPE	PRESSURE
51400	2 - 10 bar
51401	2 - 20 bar
51402	3 - 40 bar

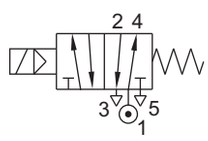

FEATURES

- Bubble tight shut off
- Mounts in any position
- Vibration resistance up to 9g
- Suitable for high speed cycling
- Speed up to 1000 cycles/ min (for 51400),others speed up to 500 cycles/ min
- Life >10 million cycles





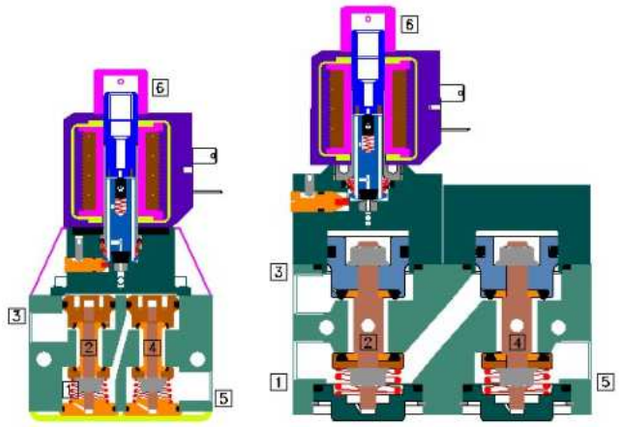

WETTED PARTS

Code	※	B1	B2	B5
Body	Anodized Aluminium	Anodized Aluminium	Brass	SS 316
Internals	Aluminium, Brass and SS 316	SS 316	Brass and SS 316	SS 316
Guide Assembly	SS 304			
Shadow-Ring	Copper/ Silver/ None			
Plunger, Insert	SS 430			
Spring/ Circlip	SS 302/ Steel			
Fasteners	SS 304			
Seat, Seals	NBR, Viton, F.Silicon			

AMBIENT AND FLUID TEMPERATURE

-30 °C to 75 °C

SPECIAL VERSION AND SUFFIX

Suffix : (Valve) AM
Special version : (Solenoid) CO, FR, SS, LC, III

MEDIA

Air, Inert Gases

APPLICATION

Operation of double acting cylinder/ actuator

PORT CONNECTION

INLET	OUTLET	OUTLET	EXHAUST	EXHAUST	PILOT EXHAUST
1	2	4	3	5	6

Contact Rotex for
- Any other ambient, fluid temperature, media and application
- UL listed, cULus Listed general purpose Valve
- Media like Water, Light Oil etc.

SPARES (Refer page 25 for ordering code)

SPARE KIT	CODE
Seal Kit : Oring Set and Plunger Assembly	98
Repair Kit : Oring Set, Plunger Assembly, Fastener, Springs, Manual Override, Guide Assembly, Piston Kit	99
Solenoid Kit : Solenoid, Gasket	34

APPROVAL (* applied for)

Approval	TYPE 4X, 6P	IP67	Ex d IIC T4 or T5 or T6 IP66	Ex ia IIC T6 IP67	DGMS	CCOE
ISI		✓	✓	✓	✓	✓
CE		✓	✓	✓		
UL	✓		*			
CCPESO			✓	✓		
EAC			✓	✓		
IECEx			✓	✓		

The pressure drop at inlet port causes malfunction of the Valve. All equipment connected between the header and the inlet port should have a higher orifice compared to the solenoid Valve.

ROTEX
Engineering For The Future

5/2 INTERNAL PILOT OPERATED, SINGLE SOLENOID POPPET VALVE

SPECIFICATION

PORT CONNECTION			PRE-SSURE bar		ORIFICE (mm)	FLOW FACTOR kv (LPM OF WATER @ 1 bar ΔP)	VALVE TYPE	PILOT PRESSURE	BODY MATERIAL AND INTERNALS				SEALS					MANUAL OVERRIDE			SOLENOID ENCLOSURE							SUFFIX		POWER VA			CONSTRUCTION REFERENCE NUMBER
																					WEATHER PROOF				EXPLOSION PROOF									
SIZE	BSP(F)	NPT(F)	MINIMUM	MAXIMUM					ALUMINIUM	ALUMINIUM + SS	BRASS (STD. PORT NPT) SS 316 (STD. PORT NPT)		NBR	Viton	EPDM	HYTREL	F. Silicon	NIL	STAYPUT CUM MOMENTARY	MOMENTARY	FLYING LEAD	PLUG IN, IP67	SQ. PLUG IN, IP67	TERMINAL BOX IP67	EXPLOSION PROOF IIC, IP67	LARGE ENCLOSURE	SOLENOID SIZE	OXYGEN	AMONIA	AC INRUSH	AC HOLDING	DC	
5/2 SINGLE SOLENOID																																	
1/4"	2G	2R	2	10	6	12	51400		※	B1	B2	B5	※	S2				M0	※	M8	F	22	25	T	E	III	14	✓	✓	18	12	8	500
			0	20	6	12	52400	2-20	※	B1	B2	B5	※	S2				M0	※	M8	F	22	25	T	E	III	14	✓	✓	18	12	8	500
			2	20	6	12	51401		※	B1	B2	B5	※	S2				M0	※	M8	F	22	25	T	E	III	14		✓	18	12	8	500
			2	40	6	12	51402		※	B1	B2	B5	※	S2				※	M12	M5	F		25	T	E		18	✓	✓	13	13	13	513
3/8"	3G	3R	2	10	6	12	51400		※	B1	B2	B5	※	S2				M0	※	M8	F	22	25	T	E	III	14		✓	18	12	8	501
			2	10	10	38	51432		※	B1	B2	B5	※	S2			S19	M0	※	M8	F	22	25	T	E	III	14		✓	18	12	8	502
			2	20	6	12	51401		※	B1	B2	B5	※	S2				M0	※	M8	F	22	25	T	E	III	14		✓	18	12	8	501
			0	20	10	38	52433	2-20	※	B1	B2	B5	※	S2			S19	M0	※	M8	F	22	25	T	E	III	14		✓	18	12	8	502
			2	20	10	38	51433		※	B1	B2	B5	※	S2			S19	M0	※	M8	F	22	25	T	E	III	14	✓	✓	18	12	8	502
			2	40	6	12	51402		※	B1	B2	B5	※	S2				※	M12	M5	F		25	T	E		18		✓	13	13	13	512
			2	40	10	38	51434		※	B1	B2	B5	※	S2			S19	※	M12	M5	F		25	T	E		18		✓	13	13	13	505
1/2"	4G	4R	2	10	6	12	51400		※	B1	B2	B5	※	S2				M0	※	M8	F	22	25	T	E	III	14		✓	18	12	8	501
			3	10	16	75	51432		※	B1	B2	B5	※	S2			S19	M0	※	M8	F	22	25	T	E	III	14		✓	18	12	8	503
			2	20	6	12	51401		※	B1	B2	B5	※	S2				M0	※	M8	F	22	25	T	E	III	14		✓	18	12	8	501
			3	20	16	75	51433		※	B1	B2	B5	※	S2			S19	M0	※	M8	F	22	25	T	E	III	14		✓	18	12	8	503
			0	20	16	75	52433	2-20	※	B1	B2	B5	※	S2			S19	M0	※	M8	F	22	25	T	E	III	14		✓	18	12	8	502
			2	40	6	12	51402		※	B1	B2	B5	※	S2				※	M12	M5	F		25	T	E		18		✓	13	13	13	512
			3	40	16	75	51434		※	B1		B5	※	S2			S19	※	M12	M5	F	22	25	T	E	III	18		✓	13	13	13	506
3/4"	6G	6R	3	10	20	110	51432		※	B1		B5	※	S2			S19	M0	※	M8	F	22	25	T	E	III	14		✓	18	12	8	504
			0	20	20	110	52433	2-20	※	B1		B5	※	S2			S19	M0	※	M8	F	22	25	T	E	III	14		✓	18	12	8	504
			4	20	20	110	51433		※	B1		B5	※	S2			S19	M0	※	M8	F		25	T	E		14		✓	18	12	8	504
			3	40	20	110	51434		※	B1		B5	※	S2			S19	※	M12	M5	F	22	25	T	E	III	18		✓	13	13	13	507
1"	8G	8R	3	10	25	185	51432		※	B1		B5	※	S2			S19	M0	※	M8	F	22	25	T	E	III	14		✓	18	12	8	508
			0	20	25	185	52433	2-20	※	B1		B5	※	S2			S19	M0	※	M8	F	22	25	T	E	III	14		✓	18	12	8	508
			4	20	25	185	51433		※	B1		B5	※	S2			S19	M0	※	M8	F		25	T	E		14		✓	18	12	8	508
			3	40	25	185	51434		※	B1		B5	※	S2			S19	※	M12	M5	F		25	T	E		18		✓	13	13	13	509

SOLENOID 14		
Cable Entry	T	E
		Ex d / Ex a / Ex emb
M20 x 1.5	19 17 M S	39 / 87 M S / 66 M S / 58 M S / 58 L T M S
M25 x 1.5	17	87 / 66 / 58 / 58 L T
1/2" NPT	16 17 N S	37 / 87 N S / 66 N S / 58 N S / 58 L T N S

SOLENOID 18		
Cable Entry	T	E
		Ex d / Ex emb
M20 x 1.5	19 17 M S	39 / 87 M S / 58 M S / 58 L T M S
M25 x 1.5	17	87 / 58 / 58 L T
1/2" NPT	16 17 N S	37 / 87 N S / 58 N S / 58 L T N S

	F
Flying lead IP54	※
Flying lead IP67	01

RESPONSE TIME

TYPE		51402	
	51400	51432	52433 *
	51401	51433	52400 *
		51434	
RESPONSE ON	8	15	8
RESPONSE OFF	25	25	15

* Depends on Pilot Valve
Response Time in ms

※ = Do not specify when opted for. Refer Page # 22 for Value of ※
✓= Options available
* Valve type printed in red colour is external pilot air/ air operated valve

ORDERING CODE AND EXAMPLE

VALVE + SOLENOID

VALVE TYPE – SUFFIX – ORIFICE – PORT CONNECTION – BODY AND INTERNALS – MANUAL OVERRIDE – SEAL - MEDIA + SIZE – VOLTAGE – CURRENT – SOLENOID ENCLOSURE – SPECIAL VERSION – POWER – INSULATION – APPROVAL

e.g. 51400-6-2G+I-230V-50Hz-22; 51432-16-4R-B2-S2+III-110V-DC-19-H

Specifications are subject to change without notice.

5/2 INTERNAL PILOT OPERATED, SINGLE SOLENOID POPPET VALVE

DIMENSIONS

All Dimensions are in mm

CONSTRUCTION REFERENCE : 500

VALVE TYPE : 51400, 52400, 51401

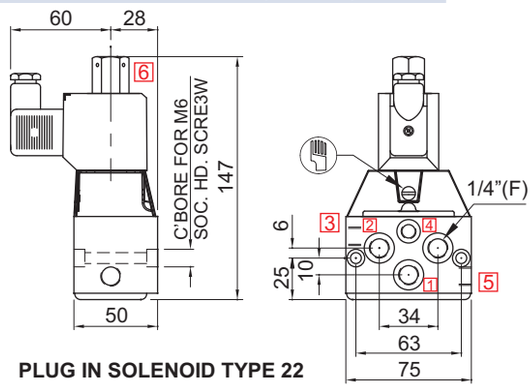

PLUG IN SOLENOID TYPE 22

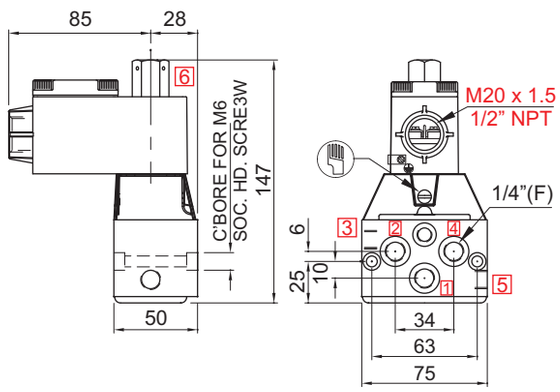

TERMINAL BOX/ Ex d TYPE 16, 19, 37, 39, 58, 58LT

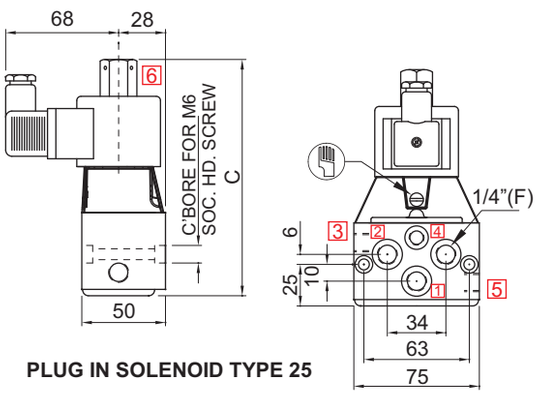

PLUG IN SOLENOID TYPE 25

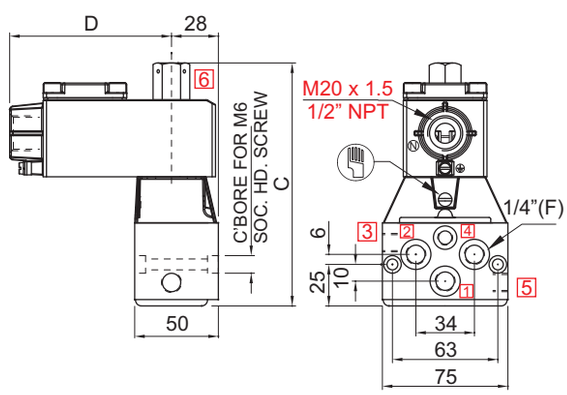

TERMINAL BOX/ Ex d LARGE ENCLOSURE,
TYPE 16, 19, 37, 39, 58, 58LT

CONST. REF.	501	512
C	147	162
VALVE TYPE	52400, 51400, 51401	51402

CONSTRUCTION REFERENCE : 501

VALVE TYPE : 51400, 51401, 52400

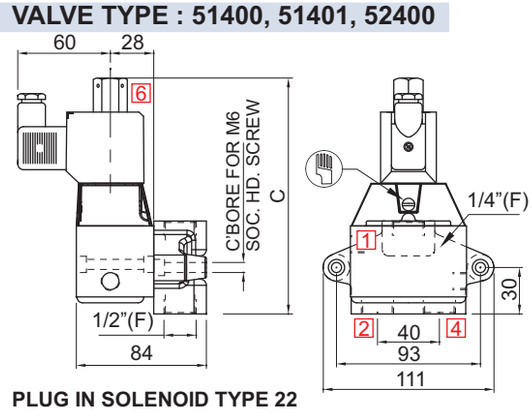

PLUG IN SOLENOID TYPE 22

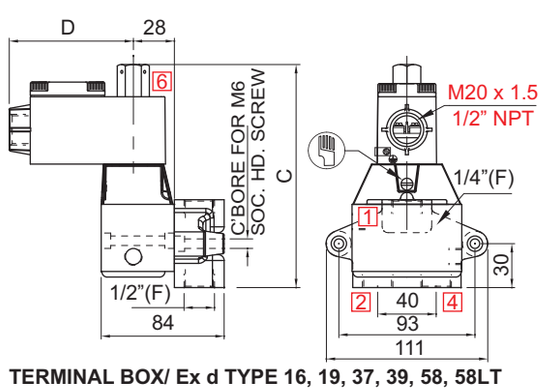

TERMINAL BOX/ Ex d TYPE 16, 19, 37, 39, 58, 58LT

CONSTRUCTION REFERENCE : 501

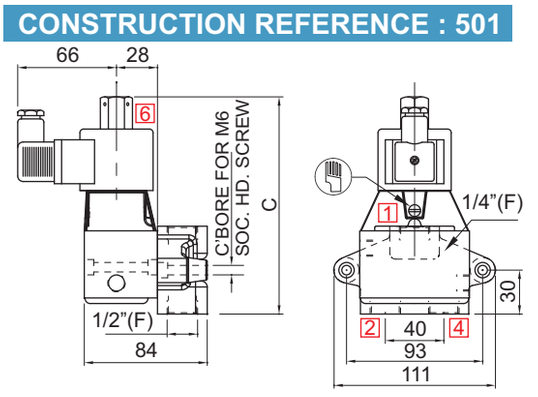

PLUG IN SOLENOID TYPE 25

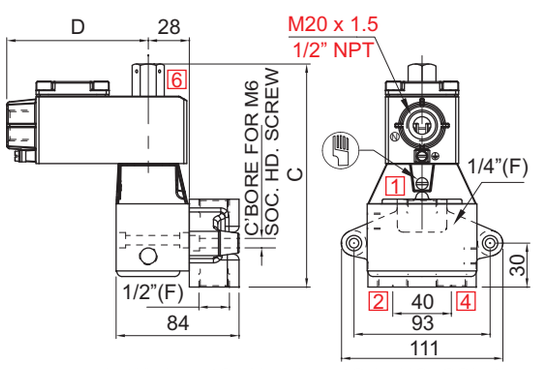

TERMINAL BOX/ Ex d LARGE ENCLOSURE,
TYPE 16, 19, 37, 39, 58, 58LT

CONST. REF.	501	512
C	150	162
VALVE TYPE	52400, 51400, 51401	51402

Specifications are subject to change without notice.

ROTEX
Engineering For The Future

5/2 INTERNAL PILOT OPERATED, SINGLE SOLENOID POPPET VALVE

DIMENSIONS

All Dimensions are in mm

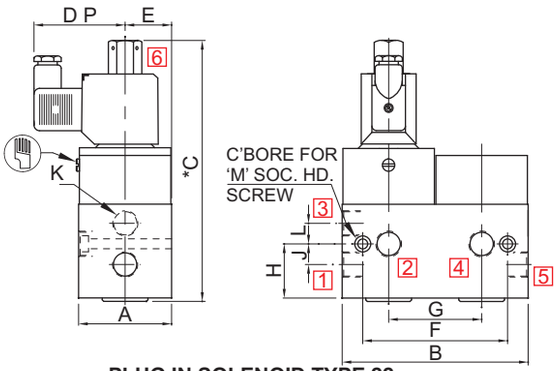

PLUG IN SOLENOID TYPE 22

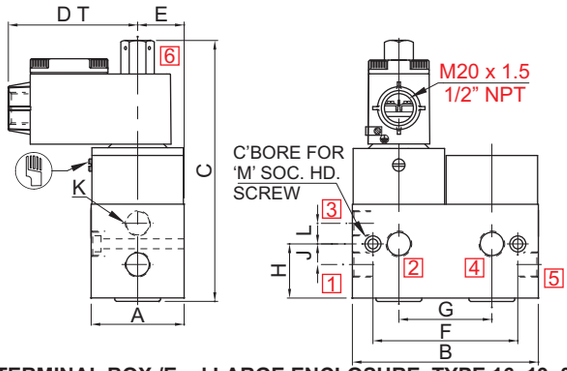

TERMINAL BOX /Ex d LARGE ENCLOSURE, TYPE 16, 19, 37, 39, 58, 58LT

NW	K (PORT SIZE)	A	B	C	D P	D T	E	F	G	H	J	L	M	CONST. REF.	C	CONST. REF.
VALVE TYPE : 51432, 51433, 51434, 52433															51434	
10	3/8"	61	122	175	60	85	30.5	95	61	35.5	13.5	13.5	M6	502	191	505
16	1/2"	81	165	196	60	85	40.5	145	81	47.5	18	18	M8	503	221	506
20	3/4"	81	165	212	60	85	40.5	145	81	57.5	26	23	M8	504	230	507

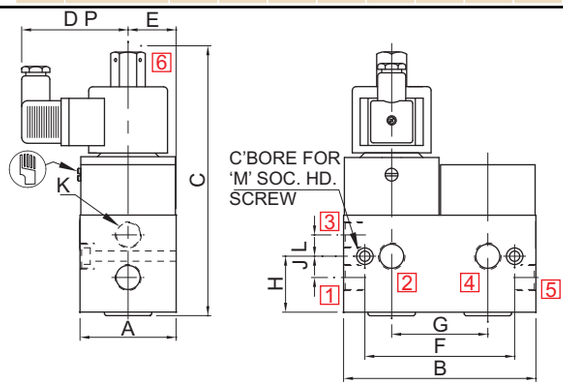

SQ. PLUG IN SOLENOID TYPE 25

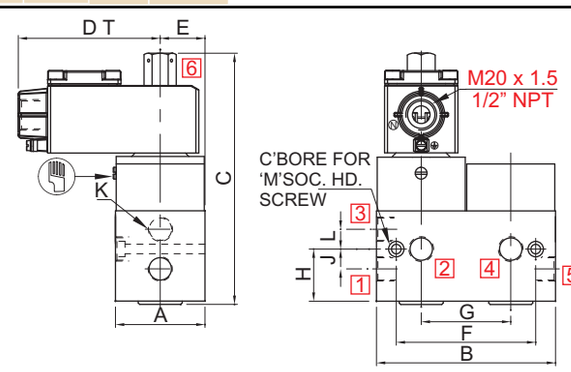

TERMINAL BOX/ Ex d LARGE ENCLOSURE, TYPE 16, 19, 37, 39, 58, 58LT, LC

NW	K (PORT SIZE)	A	B	C	D P	D T	E	F	G	H	J	L	M	CONST. REF.	C	CONST. REF.
VALVE TYPE : 51432, 51433, 51434															51434	
10	3/8"	61	122	175	68	97	30.5	95	61	35.5	13.5	13.5	M6	502	191	505
16	1/2"	81	165	196	68	97	40.5	145	81	47.5	18	18	M8	503	221	506
20	3/4"	81	165	212	68	97	40.5	145	81	57.5	26	23	M8	504	230	507

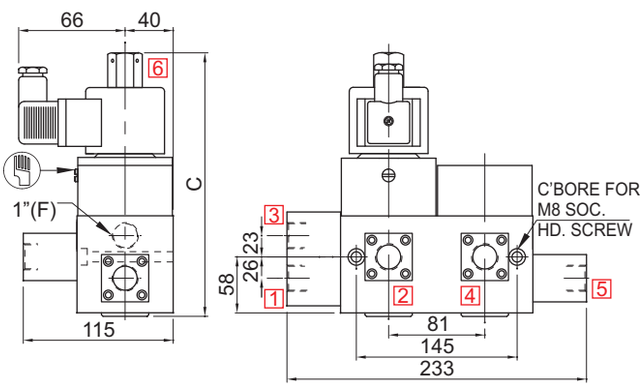

PLUG IN SOLENOID TYPE 22/ 25

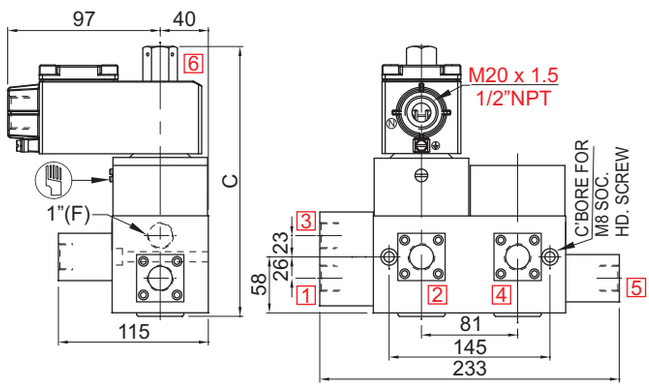

TERMINAL BOX/ Ex d LARGE ENCLOSURE, TYPE 16, 19, 37, 39, 58, 58LT, LC

VALVE TYPE	C	CONST. REF.
51432/ 51433	211	508
51434	230	509

Specifications are subject to change without notice.

5/2 INTERNAL PILOT OPERATED, SINGLE SOLENOID POPPET VALVE

CONSTRUCTION REFERENCE : 500

VALVE TYPE : 51400, 52400, 51401

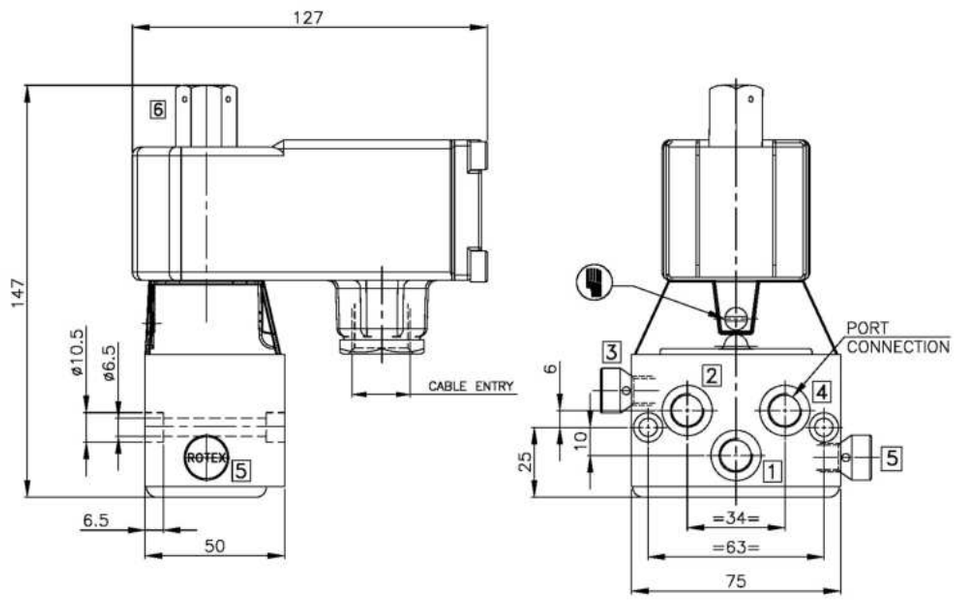

VALVE TYPE	C	CONST. REF.
52400, 51400, 51401	150	501
51402	162	512

BCE SOLENOID/ Ex d TYPE 87

CONSTRUCTION REFERENCE : 501

VALVE TYPE : 51400, 52400, 51401

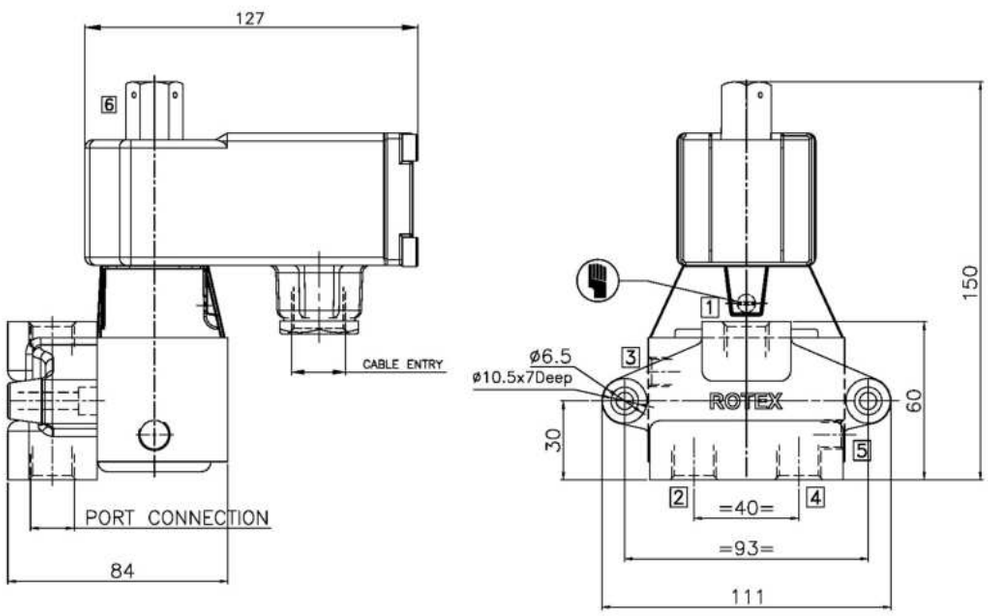

VALVE TYPE	C	CONST. REF.
52400, 51400, 51401	150	501
51402	162	512

BCE SOLENOID/ Ex d TYPE 87

8

5/2 INTERNAL PILOT OPERATED, SINGLE SOLENOID POPPET VALVE

CONSTRUCTION REFERENCE : 502, 503, 504, 510

VALVE TYPE : 51432, 52433, 51434

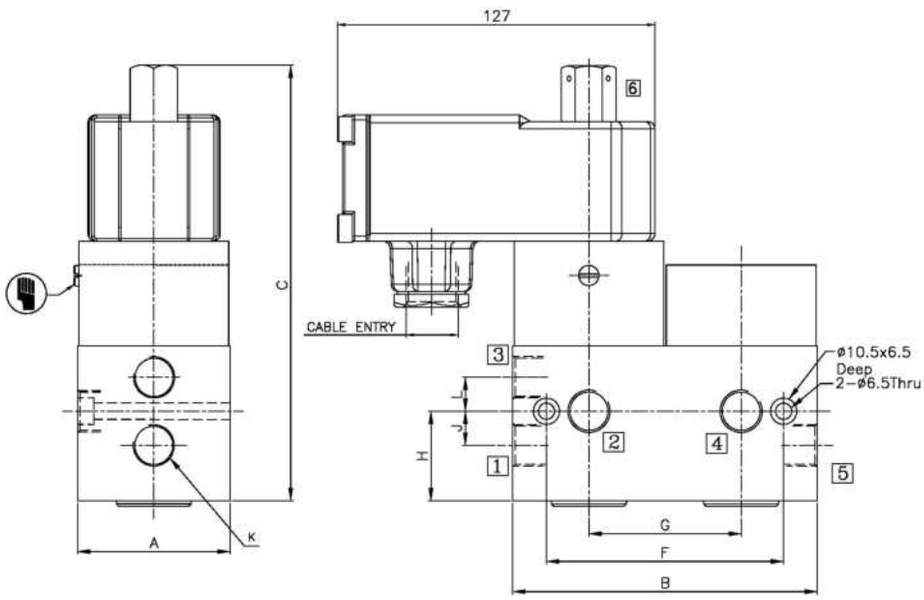

BCE SOLENOID/ Ex d TYPE 87

NW	K (PORT SIZE)	A	B	C	F	G	H	J	L	M	CONST. REF.	C	CONST. REF.
VALVE TYPE : 51432, 51433, 51434, 52433												51434	
7	1/4”	51	102	162	85	51	33.5	12.5	12.5	M6	510	182	510
10	3/8”	61	122	175	95	61	35.5	13.5	13.5	M6	502	192	505
16	1/2”	81	165	196	145	81	47.5	18	18	M8	503	216	506
20	3/4”	81	165	212	145	81	57.5	24	24	M8	504	230	507

VALVE TYPE : 51432, 52433, 51434-25

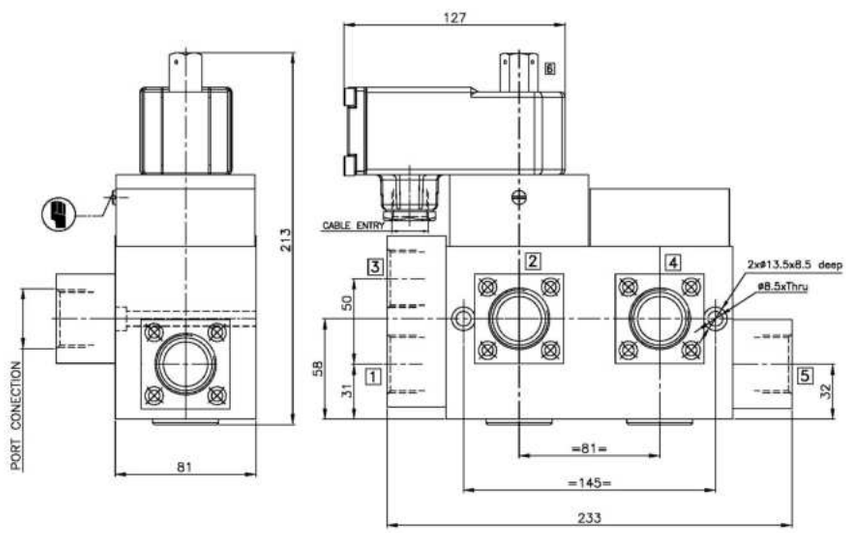

BCE SOLENOID/ Ex d TYPE 87

8

SERIES : 32P

5/2 INTERNAL PILOT OPERATED, DOUBLE SOLENOID POPPET VALVE

TYPE	PRESSURE

TYPE	PRESSURE

TYPE	PRESSURE
57400	2 - 10 bar

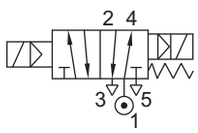

FEATURES

- Bubble tight shut off
- Mounts in any position
- Vibration resistance up to 9g
- Suitable for high speed cycling
- Speed up to 600 cycles/ min.
- Life >10 million cycles





WETTED PARTS

Code	※	B1	B2	B5
Body	Anodized Aluminium	Anodized Aluminium	Brass	SS 316
Internals	Aluminium, Brass and SS 316	SS 316	Brass and SS 316	SS 316
Guide Assembly	SS 304			
Shadow-Ring	Copper/ Silver/ None			
Plunger, Insert	SS 430			
Spring/ Circlip	SS 302/ Steel			
Fasteners	SS 304			
Seat, Seals	NBR, Viton, F.Silicon			

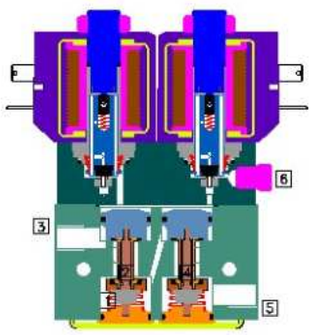

AMBIENT AND FLUID TEMPERATURE

-30 °C to 75 °C

SPECIAL VERSION AND SUFFIX

Suffix : (Valve) AM, WO
Special versions : (Solenoid) CO, FR, SS, LC, III

MEDIA

Air, Inert Gases

APPLICATION

Operation of double acting cylinder/ actuator

PORT CONNECTION

INLET	OUTLET	OUTLET	EXHAUST	EXHAUST	PILOT EXHAUST
1	2	4	3	5	6

SPARES (Refer page 25 for ordering code)

SPARE KIT	CODE
Seal Kit : Oring Set and Plunger Assembly	98
Repair Kit : Oring Set, Plunger Assembly, Fastener, Springs, Manual Override	99
Solenoid Kit : Solenoid, Gasket	34

APPROVAL (* applied for)

Approval	TYPE 4X, 6P	IP67	Ex d IIC T4 or T5 or T6 IP66	Ex ia IIC T6 IP67	DGMS	CCOE
ISI		✓	✓	✓	✓	✓
CE		✓	✓	✓		
UL	✓		*			
CCPEL			✓	✓		
PESO			✓	✓		
TECEX			✓	✓		

Contact Rotex for
- Any other ambient, fluid temperature, media and application
- UL listed, c(UL) Listed general purpose Valve
- Media like Water, Light Oil etc.

⚠ The pressure drop at inlet port causes malfunction of the Valve. All equipment connected between the header and the inlet port should have a higher orifice compared to the solenoid Valve.
Electrical failure Stayput, Air failure to reset.

ROTEX
Engineering For The Future

5/2 INTERNAL PILOT OPERATED, DOUBLE SOLENOID POPPET VALVE

SPECIFICATION

PORT CONNECTION			PRE-SSURE bar		ORIFICE (mm)	FLOW FACTOR kv (LPM OF WATER @ 1 bar ΔP)	VALVE TYPE	PILOT PRESSURE	BODY MATERIAL AND INTERNALS				SEALS					MANUAL OVERRIDE			SOLENOID ENCLOSURE						SUFFIX		POWER VA			CONSTRUCTION REFERENCE NUMBER
																					WEATHER PROOF			EXPLOSION PROOF									
SIZE	BSP(F)	NPT(F)	MINIMUM	MAXIMUM					ALUMINIUM	ALUMINIUM + SS	BRASS (STD. PORT NPT)	SS 316 (STD. PORT NPT)	NBR	Viton	EPDM	HYTREL	F.Silicon	NIL	STAYPUT CUM MOMENTARY	MOMENTARY	FLYING LEAD	PLUG IN, IP67	SQ. PLUG IN, IP67	TERMINAL BOX IP67	FPJB Ex d IIC, T4 OR T6, IP67	LARGE ENCLOSURE	SOLENOID SIZE	OXYGEN	AMONIA	AC INRUSH	AC HOLDING	DC	
5/2 DUAL SOLENOID																																
1/4"	2G	2R	2	10	6	12	57400		※	B1	B2	B5	※	S2				M0		※	F	22		T	E		14	✓	✓	18	12	8	514
3/8"	3G	3R	2	10	6	12	57400		※	B1	B2	B5	※	S2				M0		※	F	22		T	E		14	✓	✓	18	12	8	518
1/2"	4G	4R	2	10	6	12	57400		※	B1	B2	B5	※	S2				M0		※	F	22		T	E		14	✓	✓	18	12	8	515

Cable Entry	T	E
M20 x 1.5	19	39
1/2" NPT	16	37

	F
Flying lead IP54	※
Flying lead IP67	01

※ = Do not specify when opted for. Refer Page # 22 for Value of ※
✓= Options available

ORDERING CODE AND EXAMPLE

VALVE + SOLENOID

VALVE TYPE– SUFFIX – ORIFICE – PORT CONNECTION – BODY AND INTERNALS – MANUAL OVERRIDE – SEAL - MEDIA + SIZE – VOLTAGE - CURRENT – SOLENOID ENCLOSURE – SPECIAL VERSION - INSULATION - APPROVAL

e.g. 57400-6-2R-M0+I-230V-50Hz-16

5/2 INTERNAL PILOT OPERATED, DOUBLE SOLENOID POPPET VALVE

DIMENSIONS

All Dimensions are in mm

CONSTRUCTION REFERENCE : 514

PLUG IN SOLENOID TYPE 22

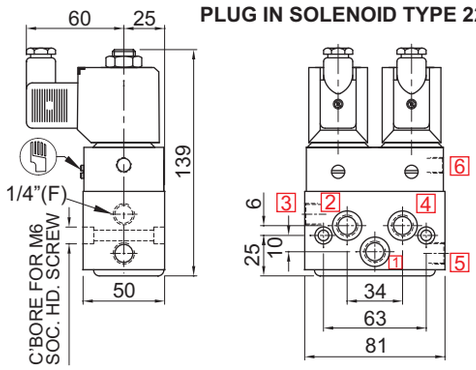

TERMINAL BOX/ Ex d TYPE 16, 19, 37, 39

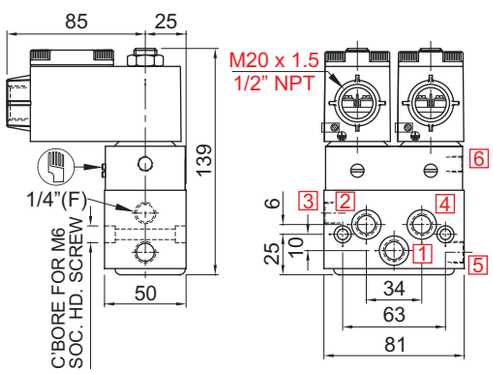

CONSTRUCTION REFERENCE : 515

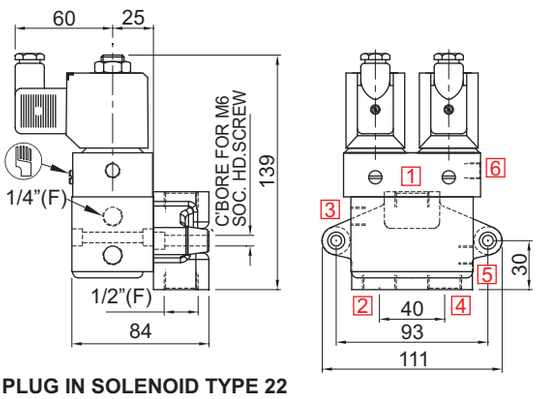

PLUG IN SOLENOID TYPE 22

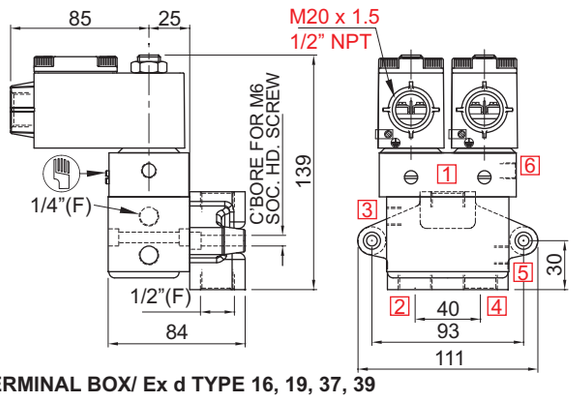

TERMINAL BOX/ Ex d TYPE 16, 19, 37, 39

CONSTRUCTION REFERENCE : 516

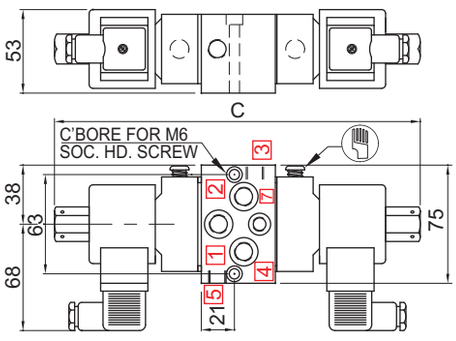

PLUG IN SOLENOID TYPE 25

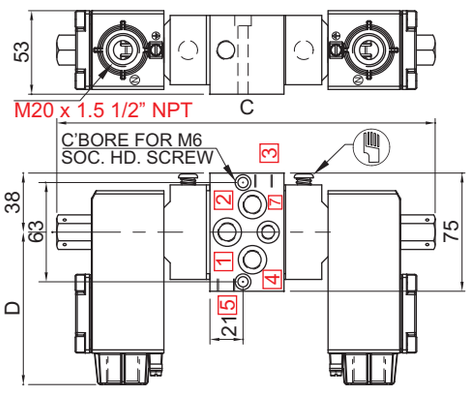

TERMINAL BOX/ Ex d LARGE ENCLOSURE, TYPE 16, 19, 37, 39

CONST. REF.	516	517
C	240	
VALVE TYPE	57408, 57409	57410

CONSTRUCTION REFERENCE : 518

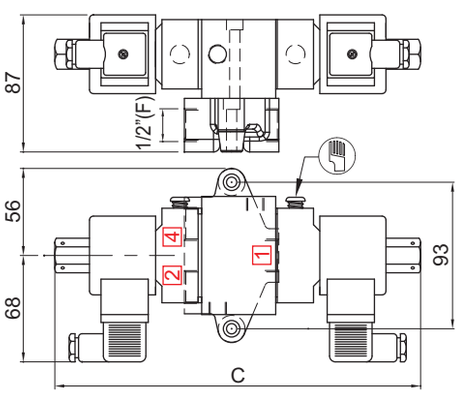

PLUG IN SOLENOID TYPE 25

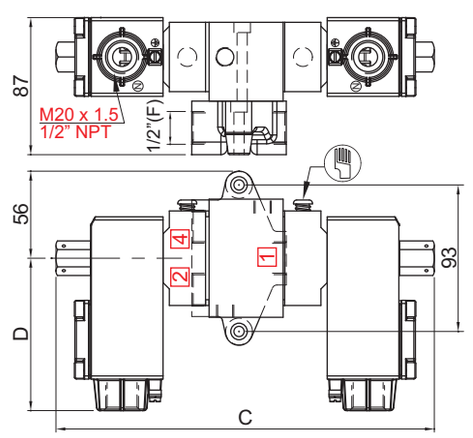

TERMINAL BOX/ Ex d LARGE ENCLOSURE, TYPE 16, 19, 37, 39

CONST. REF.	518	519
C	240	
VALVE TYPE	57408, 57409	57410

Specifications are subject to change without notice.

5/2 INTERNAL PILOT OPERATED, INLINE SINGLE SOLENOID POPPET VALVE

TYPE	PRESSURE

TYPE	PRESSURE

TYPE	PRESSURE
51440	2 - 10 bar
51441	2 - 16 bar

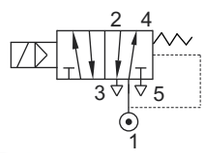



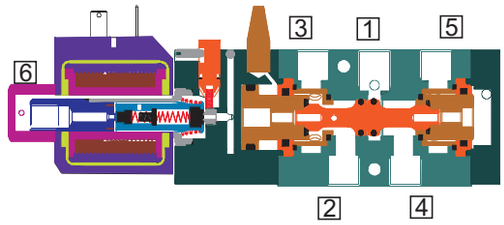

REFER CATALOGE BOOK OF

51440, 51441

ROTEX
Engineering For The Future

5/2 INTERNAL PILOT OPERATED, DOUBLE SOLENOID VALVE

TYPE	PRESSURE

TYPE	PRESSURE

TYPE	PRESSURE
57440	2 - 10 bar
57441	2 - 16 bar

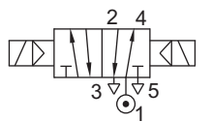



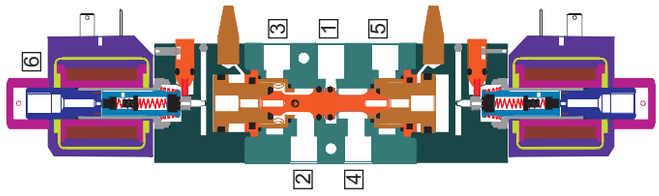

REFER CATALOGE BOOK OF

57440, 57441

ROTEX
Engineering For The Future

5/2 AIR OPERATED, SPRING/ RETURN VALVE

TYPE	PRESSURE

TYPE	PRESSURE

TYPE	PRESSURE
53400	0 - 20 bar
53402	0 - 40 bar

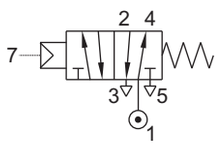

FEATURES

- Bubble tight shut off
- Mounts in any position
- Vibration resistance up to 9g
- Suitable for high speed cycling
- Speed up to 1000 cycles/ min. for Valve type 53400, 600 cycles/ min for valve type 53402
- Life >10 million cycles

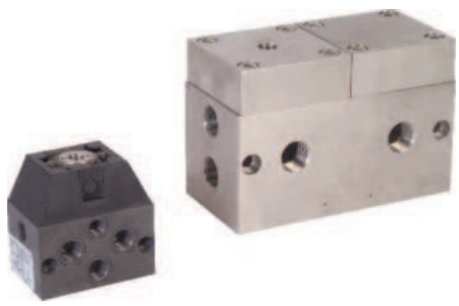

WETTED PARTS

Code	※	B1	B2	B5
Body	Anodized Aluminium	Anodized Aluminium	Brass	SS 316
Internals	Aluminium, Brass and SS 316	SS 316	Brass and SS 316	SS 316
Spring/ Circlip	SS 302			
Fasteners	SS 304			
Seat, Seals	NBR, Viton			

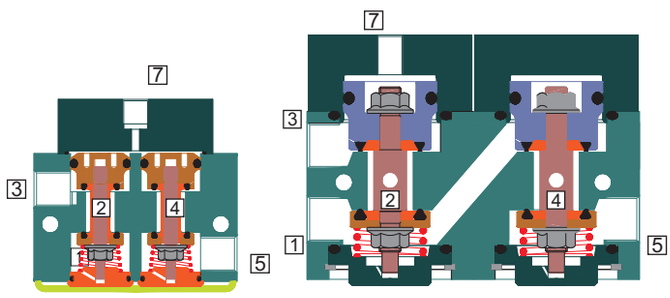

AMBIENT AND FLUID TEMPERATURE

-20 °C to 80 °C

SPECIAL VERSION AND SUFFIX

Suffix : (Valve) OX, AM,

MEDIA

Air, Inert gases, Oil, Water

SPARES

(Refer page 25 for ordering code)

SPARE KIT	CODE
Seal Kit : Oring Set	98
Repair Kit : Oring Set, Fastener, Springs	99

APPLICATION

Operation of double acting cylinder/ actuator

PORT CONNECTION

INLET	OUTLET	OUTLET	EXHAUST	EXHAUST	PILOT INLET
1	2	4	3	5	7

Contact Rotex for
- Any other ambient, fluid temperature, media and application
- SIL4 approved valve

⚠ The pilot pressure should be minimum 2 bar or ≥ main fluid pressure whichever is higher.

ROTEX
Engineering For The Future

5/2 AIR OPERATED, SPRING/ RETURN VALVE

SPECIFICATION

PORT CONNECTION			PRE-SSURE bar		ORIFICE (mm)	FLOW FACTOR kv (LPM OF WATER @ 1 bar ΔP)	VALVE TYPE	PILOT PRESSURE	BODY MATERIAL AND INTERNALS				SEALS					MANUAL OVERRIDE			SOLENOID ENCLOSURE						SUFFIX		POWER VA			CONSTRUCTION REFERENCE NUMBER
																					WEATHER PROOF				EXPLOSION PROOF								
SIZE	BSP(F)	NPT(F)	MINIMUM	MAXIMUM					ALUMINIUM	ALUMINIUM + SS	BRASS (STD. PORT NPT)	SS 316 (STD. PORT NPT)	NBR	Viton	EPDM	HYTREL	PTFE	NIL	STAYPUT CUM MOMENTARY	MOMENTARY	FLYING LEAD	PLUG IN, IP67	SQ. PLUG IN, IP67	TERMINAL BOX IP67	FPJB Ex d IIC, T4 OR T6, IP67	LARGE ENCLOSURE	SOLENOID SIZE	OXYGEN	AMONIA	AC INRUSH	AC HOLDING	DC	
							5/2 AIR OPERATED																									
1/4"	2G	2R	0	20	6	12	53400	2-20	※	B1	B2	B5	※	S2														✓				540
3/8"	3G	3R	0	20	6	12	53400	2-20	※	B1	B2	B5	※	S2														✓				545
			0	40	10	38	53402	2-40	※	B1	B2	B5	※	S2														✓				541
1/2"	4G	4R	0	20	6	12	53400	2-20	※	B1	B2	B5	※	S2														✓				545
			0	40	16	75	53402	2-40	※	B1	B2	B5	※	S2														✓				542
3/4"	6G	6R	0	40	20	110	53402	2-40	※	B1		B5	※	S2														✓				543
1"	8G	8R	0	40	25	185	53402	2-40	※	B1		B5	※	S2														✓				544

※ = Do not specify when opted for
✓= Options available

* Valve type printed in red colour is external pilot air/ air operated valve

ORDERING CODE AND EXAMPLE

VALVE

TYPE – SUFFIX – ORIFICE – PORT CONNECTION – BODY AND INTERNALS – SEAL

e.g. 53400-6-2R-B2

DIMENSIONS

All Dimensions are in mm

CONSTRUCTION REFERENCE : 540

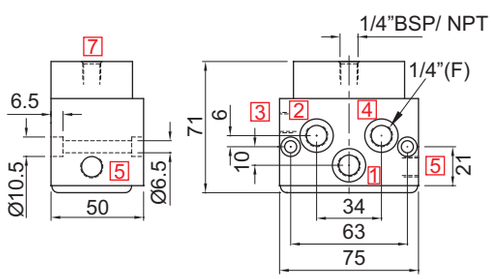

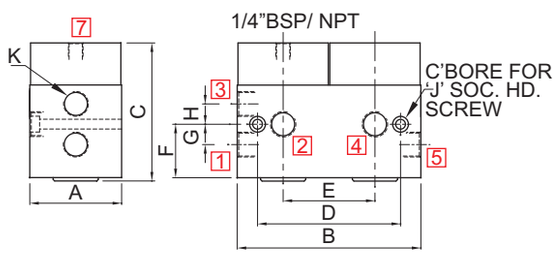

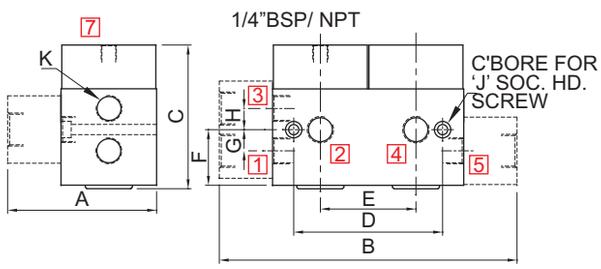

K (PORT SIZE)	A	B	C	D	E	F	G	H	J	CONST. REF.
VALVE TYPE : 53402-10, 16, 20										
3/8"	61	122	92	95	61	35.5	13.5	13.5	M6	541
1/2"	81	165	114	145	81	47.5	18	18	M8	542
3/4"	81	165	131	145	81	57.5	26	23	M8	543

K (PORT SIZE)	A	B	C	D	E	F	G	H	J	CONST. REF.
VALVE TYPE : 53402-25										
1"	114	233	131	145	81	57.5	26	23	M8	544

CONSTRUCTION REFERENCE : 545

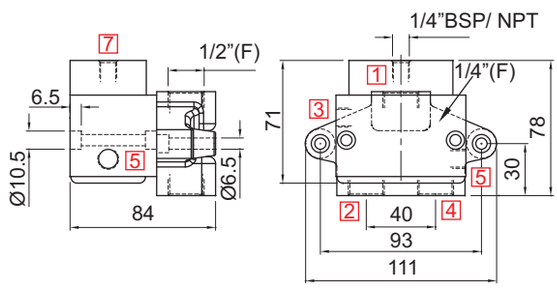

Specifications are subject to change without notice.

SERIES : 52S

5/2 AIR OPERATED, SPRING/ AIR RETURN VALVE

TYPE	PRESSURE

TYPE	PRESSURE
53440	0 - 16 bar

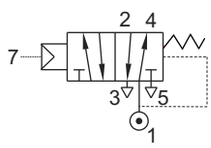

TYPE	PRESSURE
58440	0 - 16 bar

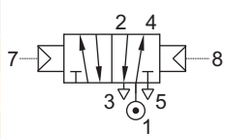

FEATURES

- Highly reliable rugged construction
- Positive Sealing snap operation with poppet design
- Bubble tight shut off
- Vibration resistance up to 9g
- Suitable for high speed cycling
- Speed up to 1200 cycles/ min
- Life >10 million cycles
- Larger exhaust for quick operation of the cylinder/ actuator
- Mounts in any position
- 53440 & 58440 Valve is Air failure to retain
- 53440S Valve is Air failure to retain (Air & Spring assisted for returning)



WETTED PARTS

Code	※	B1	B2	B5
Body	Anodized Aluminium	Anodized Aluminium	Brass	SS 316
Internals	Aluminium, Brass	SS 316	Brass	SS 316
Spring	SS 302			
Fasteners	SS 304			
Seat, Seals	NBR, Viton, F.Silicon			

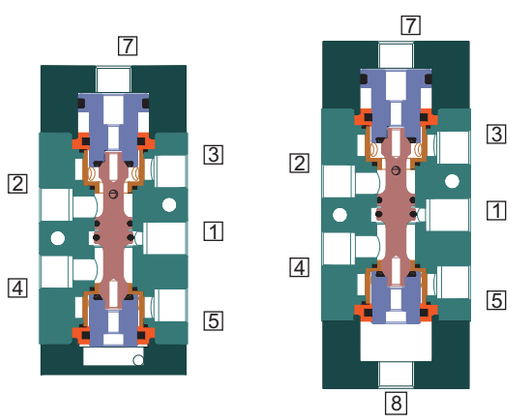

AMBIENT AND FLUID TEMPERATURE

-30 °C to 75 °C

SPECIAL VERSION AND SUFFIX

Suffix : (Valve) OX, AM,

SPARES

(Refer page 25 for ordering code)

SPARE KIT	CODE
Seal Kit : Oring Set	98
Repair Kit : Oring Set, Fastener, Springs	99

MEDIA

Air, Inert Gases, Oil, Water

APPLICATION

Double Acting actuator/ cylinder operation

PORT CONNECTION

INLET	OUTLET	OUTLET	EXHAUST	EXHAUST	EXTERNAL PILOT INLET	VALVE TYPE
1	2	4	3	5	7	53440
1	2	4	3	5	7 and 8	58440

Contact Rotex for
- Any other ambient, fluid temperature, media and application

The pilot pressure should be minimum 2 bar or ≥ main Fluid pressure whichever is higher
3/2 NC type 53440TC, 58440TC OR 2/2 NO type 53440TO, 58440TO
OIL Media Temperature Restricted from 0 °C to 100 °C

Specifications are subject to change without notice.

ROTEX
Engineering For The Future

5/2 AIR OPERATED, SPRING/ AIR RETURN VALVE

SPECIFICATION

PORT CONNECTION			PRE-SSURE bar		ORIFICE (mm)	FLOW FACTOR kv (LPM OF WATER @ 1 bar ΔP)	VALVE TYPE	PILOTG PRESSURE	BODY MATERIAL AND INTERNALS				SEALS					MANUAL OVERRIDE			SOLENOID ENCLOSURE								SUFFIX		POWER VA			CONSTRUCTION REFERENCE NUMBER
																					WEATHER PROOF				EXPLOSION PROOF										
SIZE	BSP(F)	NPT(F)	MINIMUM	MAXIMUM					ALUMINIUM	ALUMINIUM + SS	BRASS (STD. PORT NPT)	SS 316 (STD. PORT NPT)	NBR	Viton	EPDM	HYTREL	F. Silicon	NIL	STAYPUT CUM MOMENTARY	MOMENTARY	FLYING LEAD	PLUG IN, IP67	SQ. PLUG IN, IP67	TERMINAL BOX IP67	FPJB Ex d IIC, T4 OR T6, IP67	LARGE ENCLOSURE	SOLENOID SIZE	OXYGEN	AMONIA	AC INRUSH	AC HOLDING	DC	
MONO STABLE																																	
1/4"	2G	2R	0	16	6	12	53440A	2-16	※		B2	B5	※	S2			S19												✓				546
3 / 8 "		3 G	0	16	6	12	53440	2-16	※		B2	B5	※	S2															✓				547
1/2"	4G	4R	0	16	12	50	53440	2-16	※		B2	B5	※	S2															✓				547
3 / 4 "		6 G	0	16	25	110	53440V01	2-16	※			B5	※	S2															✓				548
		6 R	0	16	25	110	53440V01	2-16			B17		※	S2															✓				548A
1"	8G	8R	0	16	25	110	53440V01	2-16	※			B5	※	S2															✓				548
			0	16	25	110	53440V01	2-16			B17		※	S2															✓				548A
11/2"	12G	12R	0	16	40	410	53440V01	2-16				B12	※	S2															✓				548B
BI STABLE																																	
1/4"	2G	2R	0	16	6	12	58440A	2-16	※		B2	B5	※	S2			S19												✓				549
3 / 8 "		3 G	0	16	6	12	58440	2-16	※		B2	B5	※	S2															✓				550
1/2"	4G	4R	0	16	12	50	58440	2-16	※		B2	B5	※	S2															✓				550
3 / 4 "		6 G	0	16	25	110	58440V01	2-16	※			B5	※	S2															✓				551
		6 R	0	16	25	110	58440V01	2-16			B17		※	S2															✓				551A
1"	8G	8R	0	16	25	110	58440V01	2-16	※			B5	※	S2															✓				551
			0	16	25	110	58440V01	2-16			B17		※	S2															✓				551A
11/2"	12G	12R	0	16	40	410	58440V01	2-16				B12	※	S2															✓				551B

※ = Do not specify when opted for. Refer Page # 22 for Value of ※

✓= Options available

* Valve type printed in red colour is external pilot air/ air operated valve

ORDERING CODE AND EXAMPLE

VALVE

VALVE TYPE - SIL– SUFFIX – ORIFICE – PORT CONNECTION – BODY AND INTERNALS – SEAL - MEDIA

e.g. 53440V01-25-8G-B5-S2

DIMENSIONS

All Dimensions are in mm

K (PORT SIZE)	A	B	C	D	E	F	G	H	J	L	CONST. REF.
VALVE TYPE : 53440, 53440V01											
1/4"	53	38	125	40	24	24	24	M6	62	12	546
1/2", 3/8"	75	45	165	50	36	36	36	M6	78	18	547
1", 3/4"	110	65	205	80	56	56	54	M8	101	27	548
1", 3/4"	110	95	205	100	80	80	54	M8	78	27	548A
11/2"	170	180	394	134	92	92	92	M8	197	48	548B

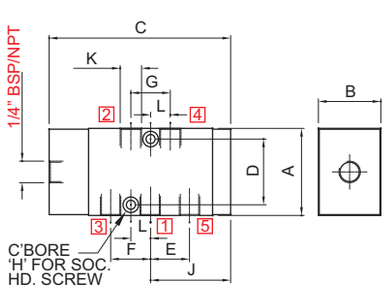

CONSTRUCTION REFERENCE:548A, 548B

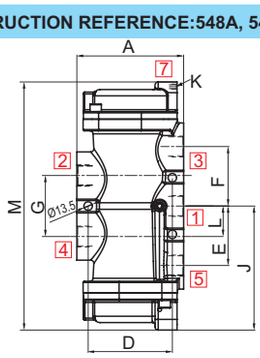

K (PORT SIZE)	A	B	D	E	F	G	H	J	L	M	CONST. REF.
VALVE TYPE : 58440, 58440V01											
1/4"	53	38	40	24	24	24	M6	49	12	125	549
1/2", 3/8"	75	45	50	36	36	36	M6	66	18	165	550
1", 3/4"	110	65	80	56	56	54	M8	92	27	205	551
1", 3/4"	110	95	100	80	80	54	M8	78	27	205	551A
11/2"	170	180	134	92	92	92	M8	197	48	394	551B

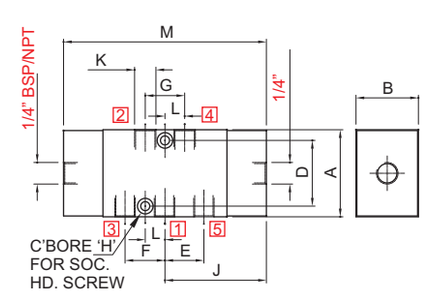

CONSTRUCTION REFERENCE:551A, 551B

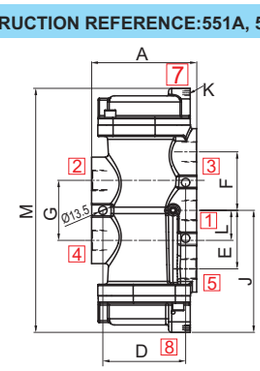

Specifications are subject to change without notice.

5/2 INTERNAL PILOT OPERATED, LARGE ORIFICE SOLENOID VALVE

TYPE	PRESSURE
57404	3 - 10 bar

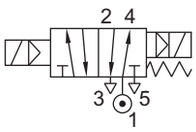

TYPE	PRESSURE
53402	0 - 10 bar

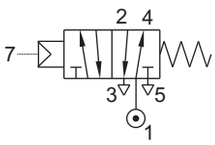

TYPE	PRESSURE
51432	3 - 10 bar

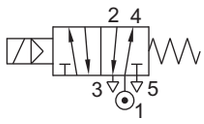



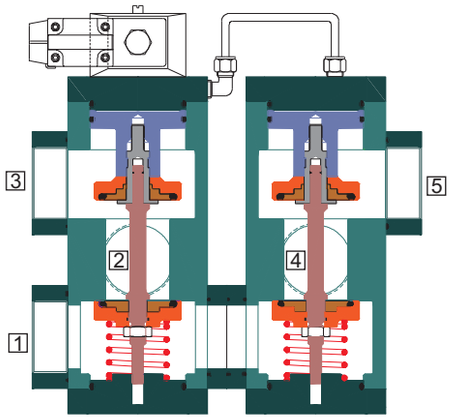

THIS MODEL IS DISCONTINUED.
OFFER ALTERNATE MODEL 51440, 57440, 53
CONTACT ROTEX IF MUST TO OFFER SPECIFIC

5/2 INTERNAL PILOT OPERATED, HIGH PRESSURE SOLENOID VALVE

TYPE	PRESSURE

TYPE	PRESSURE
57407	4 - 70 bar

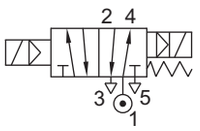

TYPE	PRESSURE
51435	4 - 70 bar

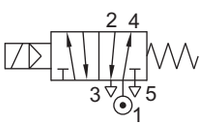



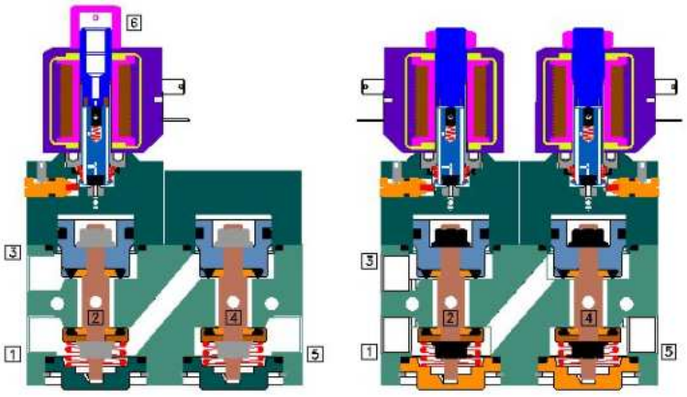

THIS MODEL IS DISCONTINUED.
OFFER ALTERNATE MODEL 51440, 57440, 53
CONTACT ROTEX IF MUST TO OFFER SPECIFIC

SERIES : 32P

5/3 INTERNAL PILOT OPERATED, CENTER OFF POPPET SOLENOID VALVE

TYPE	PRESSURE
51412	3 - 10 bar

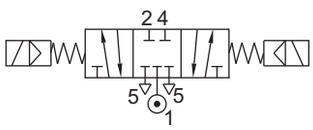

TYPE	PRESSURE
51408	2 - 10 bar

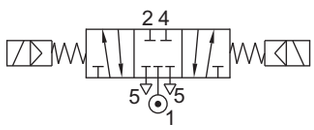

FEATURES

- Bubble tight shut off
- Mounts in any position
- Vibration resistance up to 9g
- Suitable for high speed cycling
- Speed up to 600 cycles/ min
- Life >10 million cycles



WETTED PARTS

Code	※	B1	B2	B5
Body	Anodized Aluminium	Anodized Aluminium	Brass	SS 316
Internals	Aluminium, Brass and SS 316	SS 316	Brass and SS 316	SS 316
Guide Assembly	SS 304			
Shadow-Ring	Copper/ Silver/ None			
Plunger, Insert	SS 430			
Spring/ Circlip	SS 302			
Seat, Seals	NBR, Viton, F.Silicon			
Fasteners	SS 304			

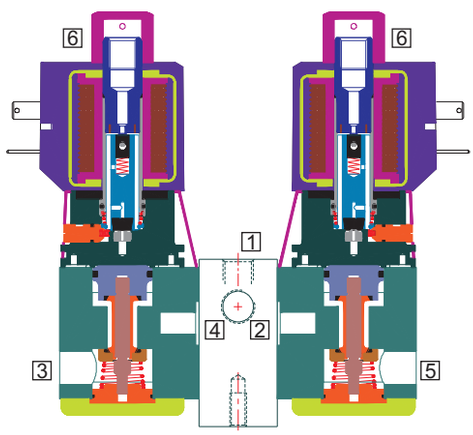

AMBIENT AND FLUID TEMPERATURE

-30 °C to 75 °C

SPECIAL VERSION AND SUFFIX

Suffix : (Valve) AM
Special version : (Solenoid) CO, FR, SS, III

MEDIA

Air, Inert Gases

APPLICATION

Double acting actuator/ Cylinder, control valve proportionate actuation

PORT CONNECTION

INLET	OUTLET	OUTLET	EXHAUST	EXHAUST	PILOT EXHAUST
1	2	4	3	5	6

SPARES

(Refer page 25 for ordering code)

SPARE KIT	CODE
Seal Kit : Oring Set and Plunger Assembly	98
Repair Kit : Oring Set, Plunger Assembly, Fastener, Springs, Manual Override Guide Assembly, Piston Kit	99
Solenoid Kit : Solenoid, Gasket	34

APPROVAL

(* applied for)

Approval	TYPE 4X, 6P	IP67	Ex d IIC T4 or T5 or T6 IP66	Ex ia IIC T6 IP67	DGMS	CCOE
ISI		✓	✓	✓	✓	✓
CE		✓	✓	✓		
UL	✓		*			
CCPEL			✓	✓		
EAC			✓	✓		
IECEx			✓	✓		

Contact Rotex for
- Any other ambient, fluid temperature, media and application
- UL listed, c(UL) Listed general purpose Valve

ROTEX
Engineering For The Future

5/3 INTERNAL PILOT OPERATED, CENTER OFF POPPET SOLENOID VALVE

SPECIFICATION

PORT CONNECTION			PRE-SSURE bar		ORIFICE (mm)	FLOW FACTOR kv (LPM OF WATER @ 1 bar ΔP)	VALVE TYPE	PILOT PRESSURE	BODY MATERIAL AND INTERNALS				SEALS					MANUAL OVERRIDE			SOLENOID ENCLOSURE							SUFFIX		POWER VA			CONSTRUCTION REFERENCE NUMBER
																					WEATHER PROOF				EXPLOSION PROOF									
SIZE	BSP(F)	NPT(F)	MINIMUM	MAXIMUM					ALUMINIUM	ALUMINIUM + SS	BRASS (STD. PORT NPT)	SS 316 (STD. PORT NPT)	NBR	Viton	EPDM	HYTREL	F.Silicon	NIL	STAYPUT CUM MOMENTARY	MOMENTARY	FLYING LEAD	PLUG IN, IP67	SQ. PLUG IN, IP67	TERMINAL BOX IP67	EXPLOSION PROOF IIC, IP67	LARGE ENCLOSURE	SOLENOID SIZE	OXYGEN	AMONIA	AC INRUSH	AC HOLDING	DC	
5/3 CENTER OFF																																
1/4”	2G	2R	2	10	6	12	51408		※		B2	B5	※	S2				M0		※		22	25	T	E	III	14		✓		12	8	572
3/8”	3G	3R	2	10	6	12	51408		※		B2	B5	※	S2				M0		※		22	25	T	E	III	14		✓		12	8	573
			2	10	10	38	51412		※		B2	B5	※	S2			S19	M0		※		22	25	T	E	III	14		✓		12	8	568
1/2”	4G	4R	2	10	6	12	51408		※		B2	B5	※	S2				M0		※		22	25	T	E	III	14		✓		12	8	573
			2	10	16	75	51412		※		B2	B5	※	S2			S19	M0		※		22	25	T	E	III	14		✓		12	8	569
3/4”	6G	6R	3	10	20	110	51412		※			B5	※	S2			S19	M0		※		22	25	T	E	III	14		✓		12	8	570
1”	8G	8R	3	10	25	185	51412		※			B5	※	S2			S19	M0		※		22	25	T	E	III	14		✓		12	8	571

| SOLENOID 14 | | | | | | | | | | | | | | | | | | |

SERIES : 32P

5/3 CENTER EXHAUST/ PRESSURISED, POPPET SOLENOID VALVE

TYPE	PRESSURE
51416	2 - 10 bar

Center Exhaust

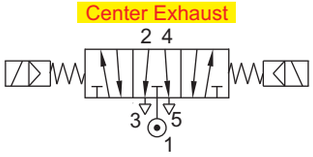

TYPE	PRESSURE
51420	2 - 10 bar

Center Pressurised

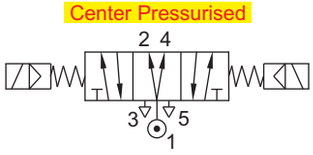

FEATURES

- Bubble tight shut off
- Mounts in any position
- Vibration resistance up to 9g
- Suitable for high speed cycling
- Speed up to 600 cycles/ min
- Life >10 million cycles



WETTED PARTS

Code	※	B1	B2	B5
Body	Anodized Aluminium	Anodized Aluminium	Brass	SS 316
Internals	Aluminium, Brass and SS 316	SS 316	Brass and SS 316	SS 316
Guide Assembly	SS 304			
Shadow-Ring	Copper/ Silver/ None			
Plunger, Insert	SS 430			
Spring	SS 302			
Seat, Seals	NBR, Viton, F.Silicon			
Fasteners	SS 304			

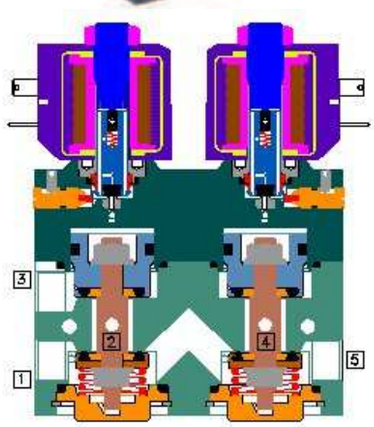

AMBIENT AND FLUID TEMPERATURE

-30 °C to 75 °C

SPECIAL VERSION AND SUFFIX

Suffix (valve) AM
Special version (Solenoid) CO, FR, SS, III

MEDIA

Air, Inert Gases

APPLICATION

Double acting actuator/ Cylinder, control valve promotional actuation. Air motor operation

PORT CONNECTION

INLET	OUTLET	OUTLET	EXHAUST	EXHAUST	PILOT EXHAUST
1	2	4	3	5	6

SPARES

(Refer page 25 for ordering code)

SPARE KIT	CODE
Seal Kit : Oring Set and Plunger Assembly	98
Repair Kit : Oring Set, Plunger Assembly, Fastener, Springs, Manual Override, Guide Assembly, Piston Kit	99
Solenoid Kit : Solenoid, Gasket	34

APPROVAL

(* applied for)

Approval	TYPE 4X, 6P	IP67	Ex d IIC T4 or T5 or T6 IP66	Ex ia IIC T6 IP67	DGMS	CCOE
ISI		✓	✓	✓	✓	✓
CE		✓	✓	✓		
UL	✓		*			
CMRI			✓	✓		
EAC			✓	✓		
IECEx			✓	✓		

Contact Rotex for
- Any other ambient, fluid temperature, media and application
- UL listed, c UL Listed general purpose Valve
- Media like Water, Light Oil etc.

⚠ The pressure drop at inlet port causes malfunction of the Valve. All equipment connected between the header and the inlet port should have a higher orifice compared to the solenoid Valve.

ROTEX
Engineering For The Future

5/3 CENTER EXHAUST/ PRESSURISED, POPPET SOLENOID VALVE

SPECIFICATION

PORT CONNECTION			PRE-SSURE bar						PILOT PRESSURE	BODY MATERIAL AND INTERNALS				SEALS					MANUAL OVERRIDE			SOLENOID ENCLOSURE							SUFFIX		POWER VA			CONSTRUCTION REFERENCE NUMBER
																						WEATHER PROOF				EXPLOSION PROOF										
SIZE	BSP(F)	NPT(F)	MINIMUM	MAXIMUM	ORIFICE (mm)	FLOW FACTOR kv (LPM OF WATER @ 1 bar ΔP)	VALVE TYPE			ALUMINIUM	ALUMINIUM + SS	BRASS (STD. PORT NPT)	SS 316 (STD. PORT NPT)	NBR	Viton	EPDM	HYTREL	F. Silicon	NIL	STAYPUT CUM MOMENTARY	MOMENTARY	FLYING LEAD	PLUG IN, IP67	SQ. PLUG IN, IP67	TERMINAL BOX IP67	EXPLOSION PROOF IIC, IP67	LARGE ENCLOSURE	SOLENOID SIZE	OXYGEN	AMONIA	AC INRUSH	AC HOLDING	DC	
5/3 CENTER, EXHAUST POPPET SOLENOID VALVE																																	
1/4"	2G	2R	2	10	6	12	51416			※		B2	B5	※	S2			S19	M0		※		22		T	E		14		✓	18	12	8	574
3/8"	3G	3R	2	10	10	38	51416			※		B2	B5	※	S2			S19	M0		※		22	25	T	E	III	14		✓	18	12	8	575
1/2"	4G	4R	2	10	16	75	51416			※		B2	B5	※	S2			S19	M0		※		22	25	T	E	III	14		✓	18	12	8	576
3/4"	6G	6R	3	10	20	110	51416			※			B5	※	S2			S19	M0		※		22	25	T	E	III	14		✓	18	12	8	577
1"	8G	8R	3	10	25	185	51416			※			B5	※	S2			S19	M0		※		22	25	T	E	III	14		✓	18	12	8	578
5/3 CENTER, PRESURISED POPPET SOLENOID VALVE																																	
1/4"	2G	2R	2	10	6	12	51420			※		B2	B5	※	S2				M0		※		22		T	E		14		✓	18	12	8	574
3/8"	3G	3R	2	10	10	38	51420			※		B2	B5	※	S2				M0		※		22	25	T	E	III	14		✓	18	12	8	575
1/2"	4G	4R	2	10	16	75	51420			※		B2	B5	※	S2				M0		※		22	25	T	E	III	14		✓	18	12	8	576
3/4"	6G	6R	3	10	20	110	51420			※			B5	※	S2				M0		※		22	25	T	E	III	14		✓	18	12	8	577
1"	8G	8R	3	10	25	185	51420			※			B5	※	S2				M0		※		22	25	T	E	III	14		✓	18	12	8	578

| SOLENOID 14 | | | | | | | | | | | | | | | | | | |

5/3 CENTER EXHAUST/ PRESSURISED, POPPET SOLENOID VALVE

DIMENSIONS

All Dimensions are in mm

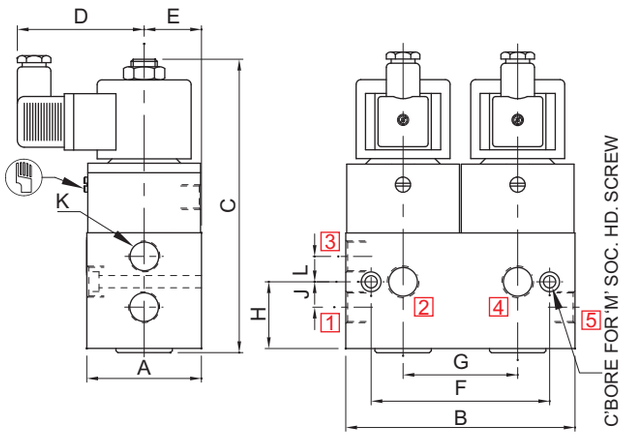

SQUARE PLUG IN SOLENOID TYPE 25

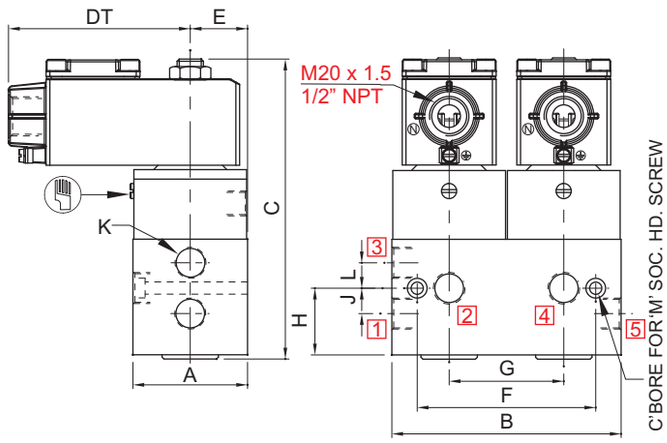

TERMINAL BOX/ Ex d LARGE ENCLOSURE, TYPE 16, 19, 37, 39, 58, 58LT

NW	K (PORT SIZE)	A	B	C	D	D T	E	F	G	H	J	L	M	CONST. REF.
VALVE TYPE : 51416, 51420														
10	3/8"	61	122	171	68	97	30.5	95	61	35.5	13.5	13.5	M6	575
16	1/2"	81	165	201	68	97	40.5	145	81	47.5	18	18	M8	576
20	3/4"	81	165	210	68	97	40.5	145	81	57.5	26	23	M8	577

CONSTRUCTION REFERENCE : 578

VALVE TYPE : 51416, 51420 ORIFICE : 25 MM

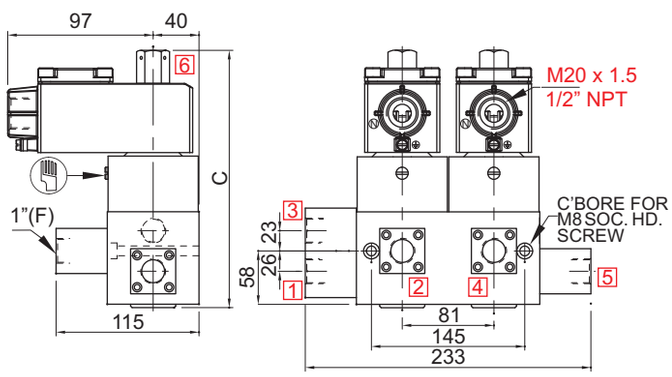

TERMINAL BOX/ Ex d/ LARGE ENCLOSURE, TYPE 16, 19, 37, 39, 58, 58LT

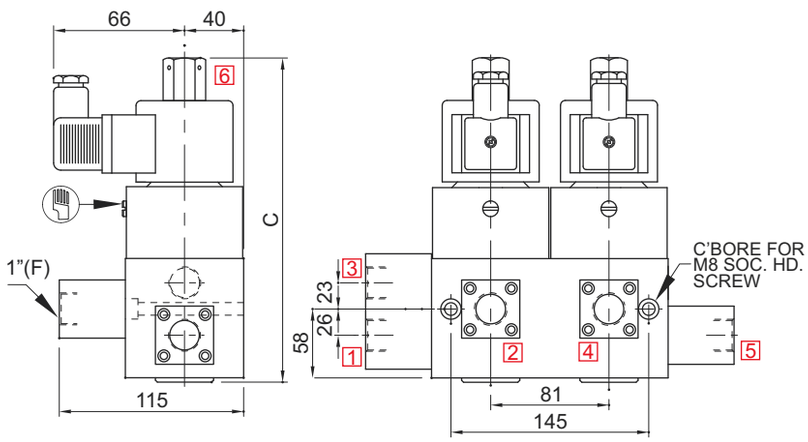

PLUG IN SOLENOID TYPE 25

2/ 3/ 5 PORT SUBBASE MOUNTED VALVE

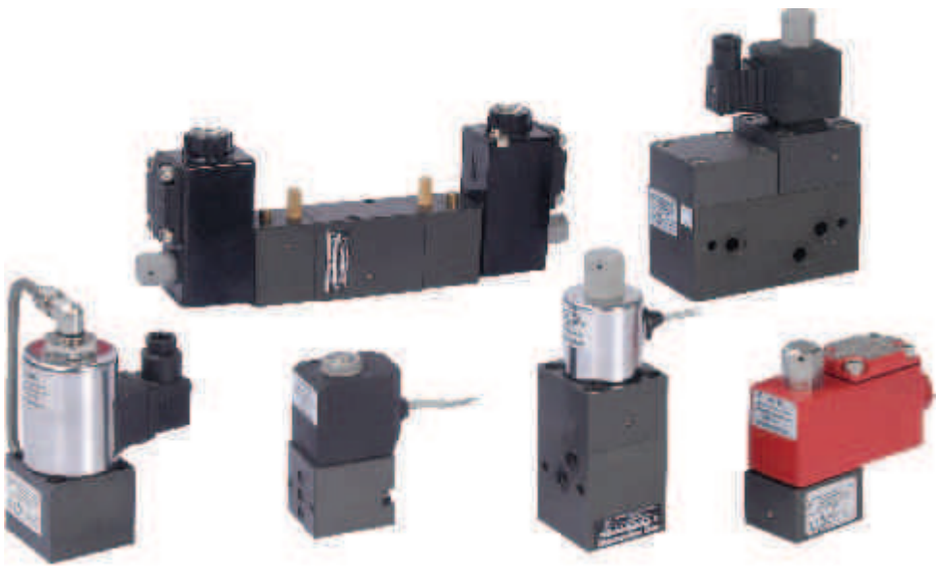

TYPE	ACTION	ORIFICE mm	PRESSURE bar	PAGE NO.
2 PORT VALVE				
Direct Acting	NC	1.2 - 4	0 - 63	185
Direct Acting	NO	1.2 - 4	0 - 63	185
3/2 NORMALLY CLOSED VALVE				
Direct Acting	NC	1.2 - 4	0 - 63	189
Direct Acting High Orifice	NC	5, 7, 10	0 - 20	193
Internal Pilot Operated	NC	7 To 25	2 - 40	195
3/2 NORMALLY OPEN VALVE				
Direct Acting	NO	1.2 - 4	0 - 63	189
Direct Acting High Orifice	NO	5, 7, 10	0 - 20	193
Internal Pilot Operated	NO	7 To 25	2 - 40	195
3/2 UNIVERSAL VALVE				
Direct Acting High Orifice	Uni	5, 7, 10	0 - 20	193
Air Operated	Uni	7 To 25	0 - 35	203
5 PORT VALVE				
Poppet	Single/ Double	6 - 25	2 - 10	197
Inline Poppet	Single/ Double	6 - 25	2 - 10	201
Poppet Air Operated	Single	6 - 25	2 - 20	205
Inline Poppet Air Operated	Single/ Double	6 - 25	2 - 16	207
MANIFOLD				
Single Sided Manifold				209
Double Sided Manifold				211
Manifold with Isolation Cock				211

2/ 3/ 5 PORT SUBBASE MOUNTED VALVE

9

SOLENOID INTERCHANGEABILITY

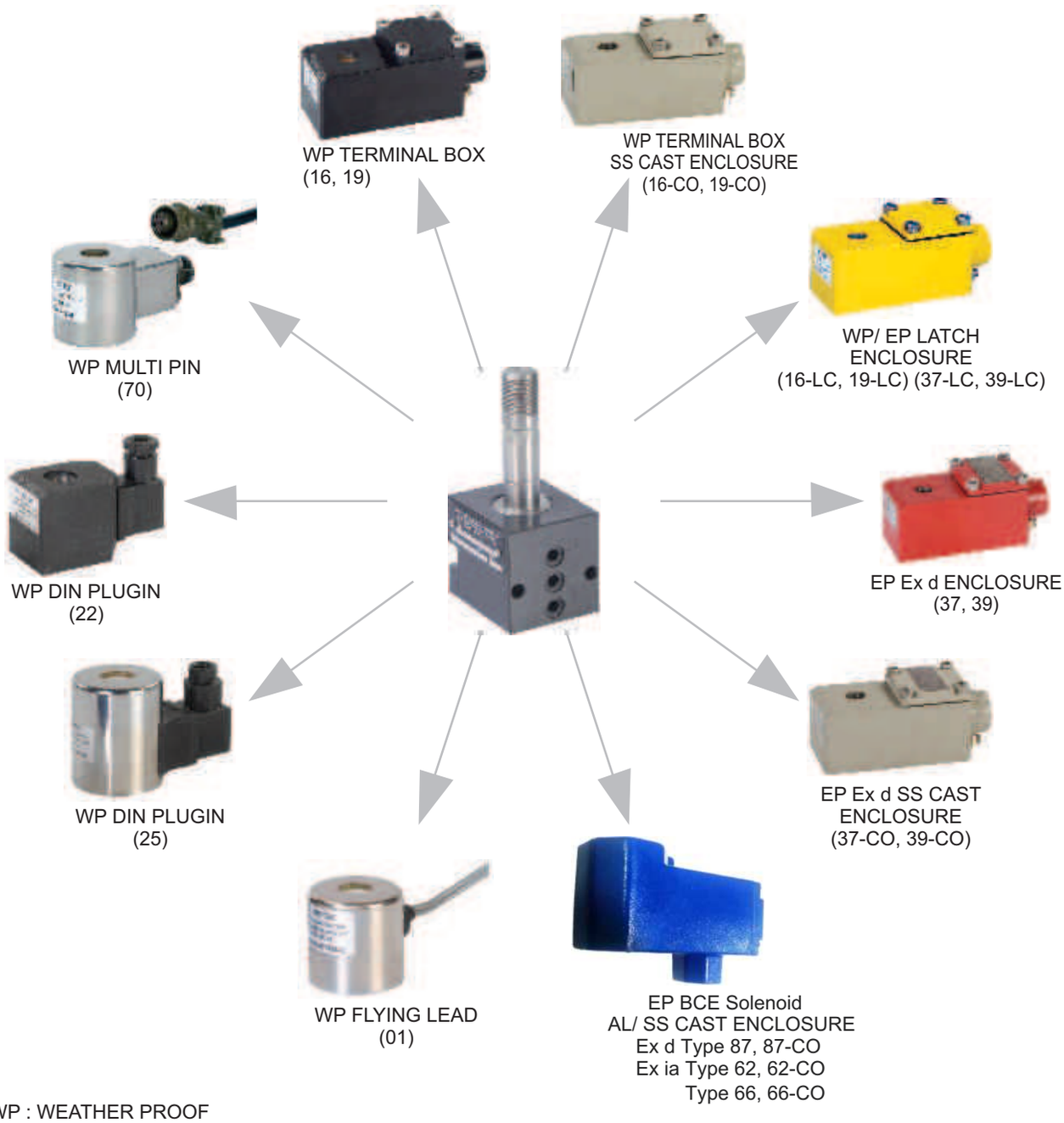

WP : WEATHER PROOF
EP : EXPLOSION PROOF

ROTEX SUBBASE MOUNTED TWO, THREE AND FIVE PORT VALVE PROVIDES INTERCHANGEABILITY FOR VARIOUS SOLENOID ENCLOSURES, VOLTAGE AND CURRENT WITHOUT AFFECTING ITS PERFORMANCE.

Specifications are subject to change without notice

1

2/2 DIRECT ACTING, NORMALLY CLOSED/ OPEN SUBBASE MOUNTED SOLENOID VALVE

TYPE	PRESSURE

TYPE	PRESSURE

TYPE	PRESSURE
20108	0 - 60 bar

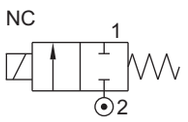

FEATURES

- Bubble tight shut off
- Mounts in any position
- Suitable for Vacuum up to 10^{-6} torr
- Vibration resistance up to 9g
- Speed up to 1000 cycles/ min
- Life >10 million cycles
- Manual Over ride optionally provided
- O Rings and fasteners supplied loose with the valve



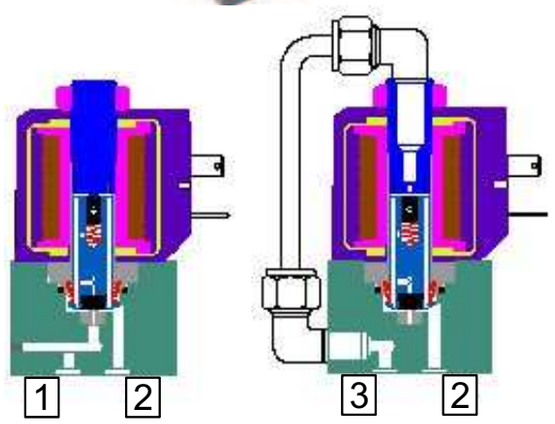

WETTED PARTS

Code	※		B5
Body	Anodized Aluminium		SS 316
Internals	Aluminium, Brass and SS 316		SS 316
Guide Assembly	SS 304		
Shadow-Ring	Copper/ Silver/ None		
Plunger, Insert	SS 430		
Spring	SS 302		
Fasteners	SS 304		
Seat, Seals	NBR, Viton, EPDM, PTFE		

AMBIENT AND FLUID TEMPERATURE

-30 °C to 75 °C

SPECIAL VERSION AND SUFFIX

Suffix : (Valve) OX, AM
Special version : (Solenoid) CO, FR, SS, LC, III

MEDIA

Air, Inert Gases, Water, Vacuum, Free Flowing Liquids, Oil, Diesel, Kerosene, LPG, Furnace Oil

APPLICATION

Analyser, Lubrication, Vacuum Venting, Cryogenic, Purging, Welding, Dental Chair, Rinsing, Fire Fighting, Sampling

PORT CONNECTION

	INLET	OUTLET
NC	2	1
NO	3	2

SPARES

(Refer page 25 for ordering code)

SPARE KIT	CODE
Seal Kit : Oring Set and Plunger Assembly	98
Repair Kit : Oring Set, Plunger Assembly, Fastener, Springs, Manual Override Guide Assembly	99
Solenoid Kit : Solenoid, Gasket	34

APPROVAL

(* applied for)

Approval	TYPE 4X, 6P	IP67	Ex d IIC T4 or T5 or T6 IP66	Ex ia IIC T6 IP67	DGMS	CCOE
		✓	✓	✓	✓	✓
CE		✓	✓	✓		
UL	✓		*			
CEPEL			✓	✓		
EAC			✓	✓		
IECEx			✓	✓		

Contact Rotex for
- Any other ambient, fluid temperature, media and application
- UL listed, c(UL) Listed general purpose Valve

Select Manifold type MF001/ MF002/ MF011/ MF012/ MF016
OIL Media Temperature Restricted from 0 °C to 100 °C

2/2 DIRECT ACTING, NORMALLY CLOSED/ OPEN SUBBASE MOUNTED SOLENOID VALVE

SPECIFICATION

PORT CONNECTION			PRESSURE bar		ORIFICE (mm)	FLOW FACTOR kv (LPM OF WATER @ 1 bar ΔP)	VALVE TYPE	PILOT PRESSURE	BODY MATERIAL AND INTERNALS				SEALS					MANUAL OVERRIDE			SOLENOID ENCLOSURE							SUFFIX		POWER VA			CONSTRUCTION REFERENCE NUMBER
																					WEATHER PROOF				EXPLOSION PROOF									
SIZE	BSP(F)	NPT(F)	MINIMUM	MAXIMUM					ALUMINIUM	ALUMINIUM + SS	BRASS	SS 316	NBR	Viton	EPDM	HYTREL	PTFE+Viton	NIL	STAYPUT CUM MOMENTARY	MOMENTARY	FLYING LEAD	PLUG IN, IP67	SQ. PLUG IN, IP67	TERMINAL BOX IP67	EXPLOSION PROOF IIC, IP67	LARGE ENCLOSURE	SOLENOID SIZE	OXYGEN	AMONIA	AC INRUSH	AC HOLDING	DC	
2/2 NORMALLY CLOSED																																
SB			0	2.5	5	8	20108		※			B5	※	S2	S1			※	M6	M8	F	22	25	T	E	III	14		✓	18	12	8	700
			0	4	4	7	20108		※			B5	※	S2	S1			※	M6	M8	F	22	25	T	E	III	14		✓	18	12	8	700
			0	6	3.5	5	20108		※			B5	※	S2	S1			※	M6	M8	F	22	25	T	E	III	14		✓	18	12	8	700
			0	8	3	4	20108		※			B5	※	S2	S1			※	M6	M8	F	22	25	T	E	III	14		✓	18	12	8	700
			0	12	2.5	3.5	20108		※			B5	※	S2	S1			※	M6	M8	F	22	25	T	E	III	14		✓	18	12	8	700
			0	15	2.2	2.5	20108		※			B5	※	S2	S1			※	M6	M8	F	22	25	T	E	III	14		✓	18	12	8	700
			0	20	1.8	1.8	20108		※			B5	※	S2	S1			※	M6	M8	F	22	25	T	E	III	14		✓	18	12	8	700
			0	60	1.2	0.7	20108		※			B5					S8	※		M5	F	22	25	T	E	III	14		✓	18	12	8	700

| SOLENOID 14 | | | | | | | | | | | | | | | | | | |

2/2 DIRECT ACTING, NORMALLY CLOSED/ OPEN SUBBASE MOUNTED SOLENOID VALVE

DIMENSIONS

All Dimensions are in mm

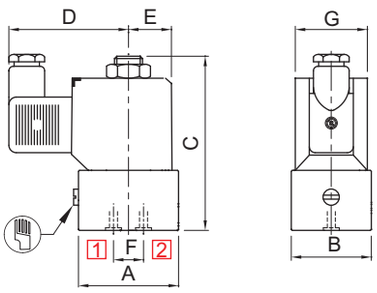

MANUAL OVERRIDE OPTIONALLY PROVIDED.

PLUG IN SOLENOID TYPE 22

K (PORT SIZE)	A	B	C	D	E	F	G	CONST. REF.
VALVE TYPE : 20108								
SUBBASE	50	40	87	60	22	15	36	700

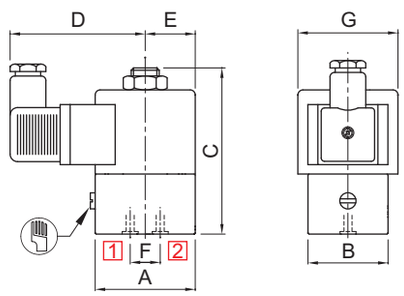

MANUAL OVERRIDE OPTIONALLY PROVIDED.

SQ. PLUG IN SOLENOID TYPE 25

K (PORT SIZE)	A	B	C	D	E	F	G	CONST. REF.
VALVE TYPE : 20108								
SUBBASE	50	40	87	68	25	15	Ø50	700

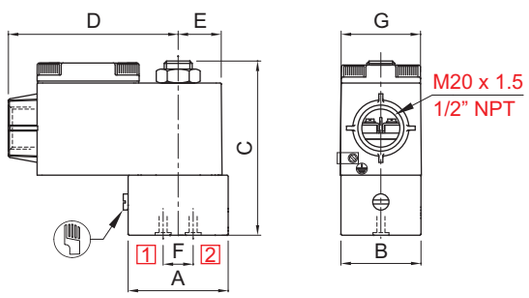

MANUAL OVERRIDE OPTIONALLY PROVIDED.

TERMINAL BOX/ Ex d TYPE16, 19, 37, 39, 58, 58LT

K (PORT SIZE)	A	B	C	D	E	F	G	CONST. REF.
VALVE TYPE : 20108								
SUBBASE	50	40	87	85	22	15	41	700

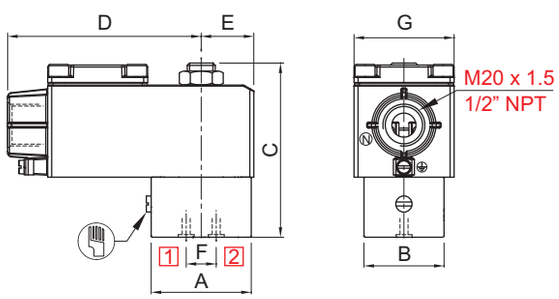

MANUAL OVERRIDE OPTIONALLY PROVIDED.

TERMINAL BOX/ Ex d LARGE ENCLOSURE TYPE16, 19, 37, 39, 58, 58LT, LC

K (PORT SIZE)	A	B	C	D	E	F	G	CONST. REF.
VALVE TYPE : 20108								
SUBBASE	50	40	87	97	26	15	50	700

3/2 DIRECT ACTING, NC/ NO SUBBASE MOUNTED SOLENOID VALVE

TYPE	PRESSURE

TYPE	PRESSURE
30211	0 - 20 bar
30212	0 - 32 bar

TYPE	PRESSURE
30111	0 - 20 bar
30112	0 - 63 bar

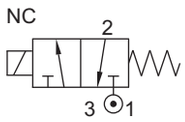

FEATURES

- Bubble tight shut off
- Mounts in any position
- Vibration resistance up to 9g
- Suitable for high speed cycling
- Speed up to 1000 cycles/ min
- Life >10 million cycles
- O Rings and fasteners supplied loose with the valve



WETTED PARTS

Code	※		B5
Body	Anodized Aluminium		SS 316
Internals	Aluminium		SS 316

Guide Assembly	SS 304
Shadow-Ring	Copper/ Silver/ None
Plunger, Insert	SS 430
Spring	SS 302
Fasteners	SS 304
Seat, Seals	NBR, Viton, EPDM, PTFE

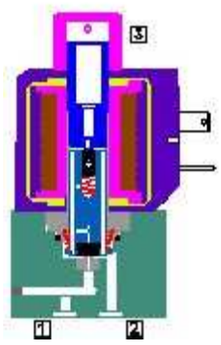

AMBIENT AND FLUID TEMPERATURE

-30 °C to 75 °C

SPECIAL VERSION AND SUFFIX

Suffix : (Valve) OX, AM
Special version : (Solenoid) CO, FR, SS, LC, III

MEDIA

Air, Inert Gases

APPLICATION

Actuation of single acting cylinder actuator control valve actuation

PORT CONNECTION

FUNCTION	INLET	OUTLET	EXHAUST
NC	1	2	3
NO	3	2	1

Contact Rotex for
- Any other ambient, fluid temperature, media and application
- UL listed, c(UL) Listed general purpose Valve
- Media like Water, Light Oil etc.

SPARES

(Refer page 25 for ordering code)

SPARE KIT	CODE
Seal Kit : Oring Set and Plunger Assembly	98
Repair Kit : Oring Set, Plunger Assembly, Fastener, Springs, Manual Override Guide Assembly	99
Solenoid Kit : Solenoid, Gasket	34

APPROVAL

(* applied for)

Approval	TYPE 4X, 6P	IP67	Ex d IIC T4 or T5 or T6 IP66	Ex ia IIC T6 IP67	DGMS	CCOE
ISI		✓	✓	✓	✓	✓
CE		✓	✓	✓		
UL	✓		*			
CCPEL			✓	✓		
EAC			✓	✓		
IECEx			✓	✓		

Select Manifold type MF001/ MF002/ MF011/ MF012/ MF016

ROTEX
Engineering For The Future

3/2 DIRECT ACTING, NC/ NO SUBBASE MOUNTED SOLENOID VALVE

SPECIFICATION

PORT CONNECTION			PRE-SSURE bar					BODY MATERIAL AND INTERNALS				SEALS					MANUAL OVERRIDE			SOLENOID ENCLOSURE							SUFFIX		POWER VA			CONSTRUCTION REFERENCE NUMBER
																				WEATHER PROOF				EXPLOSION PROOF								
SIZE	BSP(F)	NPT(F)	MINIMUM	MAXIMUM	ORIFICE (mm)	FLOW FACTOR kv (LPM OF WATER @ 1 bar ΔP)	VALVE TYPE	PILOT PRESSURE	ALUMINIUM	ALUMINIUM + SS	BRASS	SS 316	NBR	Viton	EPDM	HYTREL	PTFE	NIL	STAYPUT CUM MOMENTARY	MOMENTARY	FLYING LEAD	PLUG IN, IP67	SQ. PLUG IN, IP67	TERMINAL BOX IP67	EXPLOSION PROOF IIC, IP67	LARGE ENCLOSURE	SOLENOID SIZE	OXYGEN	AMONIA	AC INRUSH	AC HOLDING	DC	
3/2 NORMALLY CLOSED																																	
SB			0	4	3	4	30111		※			B5	※	S2	S1			※	M6	M8		22	25	T	E	III	14		✓	18	12	8	704
			0	6	2.5	3.5	30111		※			B5	※	S2	S1			※	M6	M8		22	25	T	E	III	14		✓	18	12	8	704
			0	8	2.2	2.5	30111		※			B5	※	S2	S1			※	M6	M8		22	25	T	E	III	14		✓	18	12	8	704
			0	10	1.8	1.8	30111		※			B5	※	S2	S1			※	M6	M8		22	25	T	E	III	14		✓	18	12	8	704
			0	12	3	4	30112		※			B5	※	S2	S1			※	M6	M8			25	T	E		18		✓	13	13	13	705
			0	16	2.5	3.5	30112		※			B5	※	S2	S1			※	M6	M8			25	T	E		18		✓	13	13	13	705
			0	20	1.2	0.7	30111		※			B5	※	S2	S1			※	M6	M8		22	25	T	E	III	14		✓	18	12	8	704
			0	25	2.2	2.5	30112		※			B5	※	S2	S1			※	M6	M8			25	T	E		18		✓	13	13	13	705
			0	32	1.8	1.8	30112		※			B5	※	S2	S1			※	M6	M8			25	T	E		18		✓	13	13	13	705
			0	63	1.2	0.7	30112V01		※			B5					S8	※					25	T	E		18		✓	13	13	13	705
SB1	CNO	MO	0	10	1.8	1.8	30111		※			B5	※	S2	S1			※	M6	M8		22	25	T	E		14		✓	18	12	8	703
			0	150	0.8		30112V01					B5					S8						25	T	E		18		✓	13	13	13	705
3/2 NORMALLY OPEN																																	
SB			0	6	4	7	30212		※			B5	※	S2	S1			※	M6	M8			25	T	E		18		✓	13	13	13	707
			0	8	2.2	2.5	30211		※			B5	※	S2	S1			※	M6	M8		22	25	T	E	III	14		✓	18	12	8	706
			0	8	3.5	5	30212		※			B5	※	S2	S1			※	M6	M8			25	T	E		18		✓	13	13	13	707
			0	10	1.8	1.8	30211		※			B5	※	S2	S1			※	M6	M8		22	25	T	E	III	14		✓	18	12	8	706
			0	12	3	4	30212		※			B5	※	S2	S1			※	M6	M8			25	T	E		18		✓	13	13	13	707
			0	16	2.5	3.5	30212		※			B5	※	S2	S1			※	M6	M8			25	T	E		18		✓	13	13	13	707
			0	20	1.2	0.7	30211		※			B5	※	S2	S1			※	M6	M8		22	25	T	E	III	14		✓	18	12	8	706
			0	25	2.2	2.5	30212		※			B5	※	S2	S1			※	M6	M8			25	T	E		18		✓	13	13	13	707
			0	32	1.8	1.8	30212		※			B5	※	S2	S1			※	M6	M8			25	T	E		18		✓	13	13	13	707

| SOLENOID 14 | | | | | | | | | | | | | | | | | | |

3/2 DIRECT ACTING, NC/ NO SUBBASE MOUNTED SOLENOID VALVE

DIMENSIONS

All Dimensions are in mm

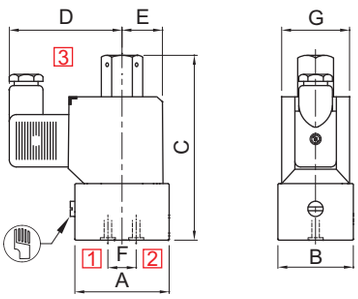

MANUAL OVERRIDE OPTIONALLY PROVIDED.

PLUG IN SOLENOID TYPE 25

K (PORT SIZE)	A	B	C	D	E	F	G	CONST. REF.
VALVE TYPE : 30111								
SUBBASE	50	40	109	66	25	15	Ø50	704

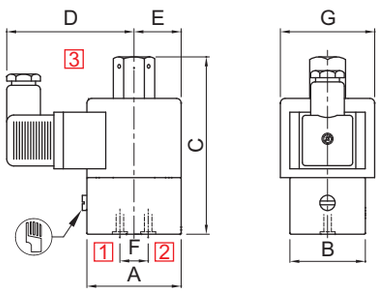

MANUAL OVERRIDE OPTIONALLY PROVIDED.

SQ. PLUG IN SOLENOID TYPE 25

K (PORT SIZE)	A	B	C	D	E	F	G	CONST. REF.
VALVE TYPE : 30111								
SUBBASE	50	40	109	66	25	15	Ø50	704
VALVE TYPE : 30112								
SUBBASE	50	50	118	66	25	15	Ø50	705

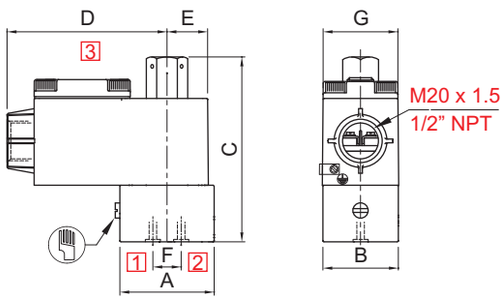

MANUAL OVERRIDE OPTIONALLY PROVIDED.

TERMINAL BOX/ Ex d TYPE 16, 19, 37, 39, 58, 58LT

K (PORT SIZE)	A	B	C	D	E	F	G	CONST. REF.
VALVE TYPE : 30111								
SUBBASE	50	40	109	85	22	15	41	704

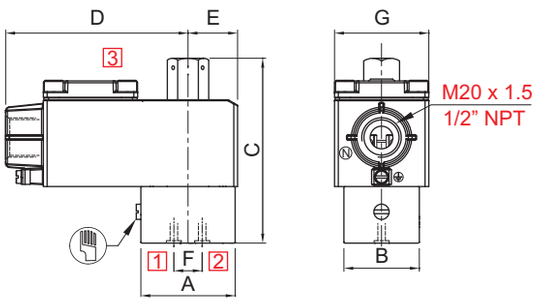

MANUAL OVERRIDE OPTIONALLY PROVIDED.

TERMINAL BOX/ Ex d LARGE ENCLOSURE TYPE 16, 19, 37, 39, 58, 58LT, LC

K (PORT SIZE)	A	B	C	D	E	F	G	CONST. REF.
VALVE TYPE : 30111								
SUBBASE	50	40	109	97	26	15	50	704
VALVE TYPE : 30112								
SUBBASE	50	50	118	97	26	15	50	705

SERIES : 32D

3/2 DIRECT ACTING, HIGH ORIFICE UNIVERSAL SUBBASE MOUNTED SOLENOID VALVE

TYPE	PRESSURE

TYPE	PRESSURE

TYPE	PRESSURE
30316	0 - 10 bar
30317	0 - 10 bar
30332	0 - 16 bar

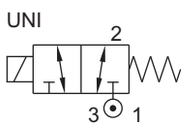

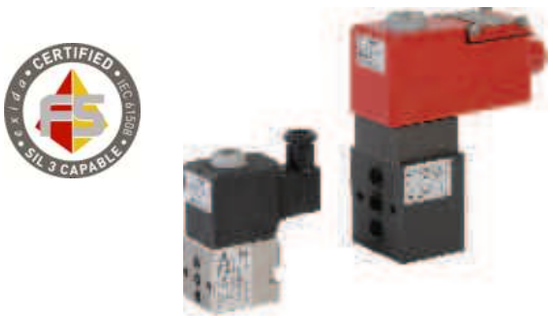

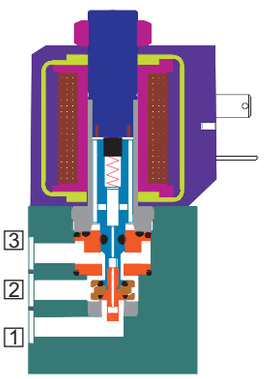

REFER CATALOGE BOOK OF

30316, 30317, 30332

SERIES : 32P

3/2 INTERNAL PILOT OPERATED, NC/ NO SUBBASE MOUNTED SOLENOID VALVE

TYPE	PRESSURE

TYPE	PRESSURE
31205	2 - 10 bar

NO

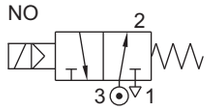

TYPE	PRESSURE
31123	2 - 10 bar

NC

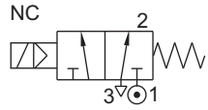

FEATURES

- Bubble tight shut OFF
- Mounts in any position
- Vibration resistance up to 9g
- Suitable for high speed cycling
- Speed up to 600 cycles/ min
- Life >10 million cycles
- O Rings and fasteners supplied loose with the valve



WETTED PARTS

Code	※	B1	B2	B5
Body	Anodized Aluminium	Anodized Aluminium	Brass	SS 316
Internals	Aluminium, Brass and SS 316	SS 316	Brass and SS 316	SS 316
Guide Assembly	SS 304			
Shadow-Ring	Copper/ Silver/ None			
Plunger, Insert	SS 430			
Spring/ Circlip	SS 302/ Steel			
Fasteners	SS 304			
Seat, Seals	NBR, Viton			

※ Do not specify code if opted

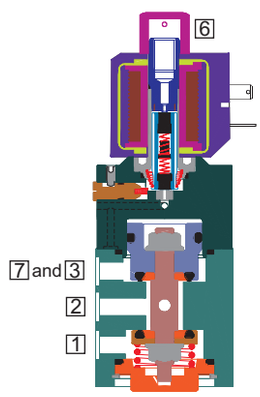

AMBIENT AND FLUID TEMPERATURE

-20 °C to 80 °C

SPECIAL VERSION AND SUFFIX

Suffix : (Valve) OX, AM, WO
Special versions : (Solenoid) CO, FR, SS, LC, III

MEDIA

Air, Inert Gases, Water, Vacuum, Free Flowing Liquid, Oil, Diesel, Kerosene, LPG

APPLICATION

Single acting actuator/ Cylinder, control valve actuation

PORT CONNECTION

	INLET	OUTLET	EXHAUST	PILOT EXHAUST
NC	1	2	3	6
NO	3	2	1	6

SPARES (Refer page 25 for ordering code)

SPARE KIT	CODE
Seal Kit : Oring Set and Plunger Assembly	98
Repair Kit : Oring Set, Plunger Assembly, Fastener, Springs, Manual Override	99
Solenoid Kit : Solenoid, Gasket	34

APPROVAL (* applied for)

Approval	Nema 4X	IP67	Ex d IIC T4 or T5 or T6 IP66	Ex ia IIC T6 IP67	DGMS	CCOE
		✓	✓	✓	*	✓
CE		✓	✓	✓		
UL	✓		*			
CEPEL			✓	✓		
PG			✓	✓		
IECEx			*	*		

Contact Rotex for
- Any other ambient, fluid temperature, media and application
- UL listed, c(UL) Listed general purpose Valve
- SIL4 approved valve

⚠ The pressure drop at inlet port causes malfunction of the Valve. All equipment connected between the header and the inlet port should have a higher orifice compared to the solenoid Valve. Select Manifold MF009
OIL Media Temperature Restricted from 0 °C to 100 °C

ROTEX
Engineering For The Future

3/2 INTERNAL PILOT OPERATED, NC/ NO SUBBASE MOUNTED SOLENOID VALVE

SPECIFICATION

PORT CONNECTION			PRE-SSURE bar		ORIFICE (mm)	FLOW FACTOR kv (LPM OF WATER @ 1 bar ΔP)	VALVE TYPE	PILOT PRESSURE	BODY MATERIAL AND INTERNALS				SEALS					MANUAL OVERRIDE			SOLENOID ENCLOSURE							SUFFIX		POWER VA			CONSTRUCTION REFERENCE NUMBER
																					WEATHER PROOF				EXPLOSION PROOF									
SIZE	BSP(F)	NPT(F)	MINIMUM	MAXIMUM					ALUMINIUM	ALUMINIUM + SS	BRASS	SS 316/ CF8M	NBR	Viton	EPDM	HYTREL	PTFE	NIL	STAYPUT CUM MOMENTARY	MOMENTARY	FLYING LEAD	PLUG IN, IP67	SQ. PLUG IN, IP67	TERMINAL BOX IP67	FPJB Ex d IIC, T4 OR T6, IP67	LARGE ENCLOSURE	SOLENOID SIZE	OXYGEN	AMONIA	AC INRUSH	AC HOLDING	DC	
3/2 NORMALLY CLOSED																																
SB			2	10	7	18	31123		※		B2	B5	※	S2	S1			M0	※	M8	F	22	25	T	E	III	14		✓	18	12	8	711
3/2 NORMALLY OPEN																																
SB			2	10	7	18	31205		※		B2	B5	※	S2	S1			M0	※	M8	F	22	25	T	E	III	14		✓	18	12	8	711

Cable Entry	T	E	
		Ex d	Ex ia
M20 x 1.5	19	39	66MS
M25 x 1.5		66	
1/2" NPT	16	37	66NS

	F
Flying lead IP54	※
Flying lead IP67	01

※ = Do not specify when opted for
✓= Options available

ORDERING CODE AND EXAMPLE

VALVE + SOLENOID

TYPE - SUFFIX - ORIFICE - PORT CONNECTION
BODY AND INTERNALS - MANUAL OVERRIDE - SEAL+
SIZE - VOLTAGE - CURRENT - SOLENOID ENCLOSURE
- APPROVAL - INSULATION - SPECIAL VERSION
e.g. 31123-7-SB+24V DC-22

DIMENSIONS

All Dimensions are in mm

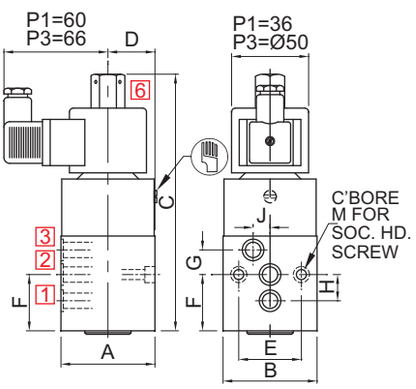

PLUG IN SOLENOID TYPE 22/ 25

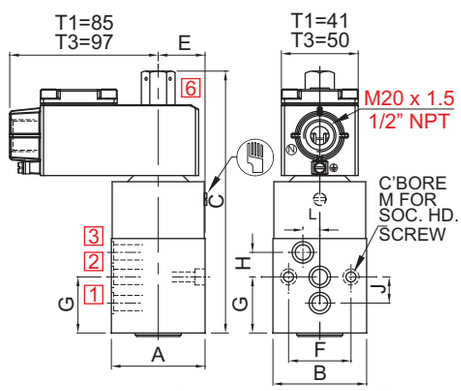

TERMINAL BOX/ Ex d/ LARGE ENCLOSURE, TYPE 16, 19, 37, 39

NW	A	B	C	D	E	F	G	H	J	M	CONST. REF.
VALVE TYPE : 31123, 31205											
7	51	51	157	26	38	34	14	14	9	M6	711

ADOPTER PLATE

Adopter plate is used for mounting 1 No. 31123 valve. This has individual inlet, outlet and exhaust ports. Pilot connection can be provided on the adopter plate

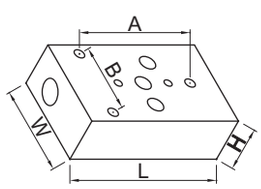

ADOPTOR PLATE	K (PORT SIZE)	L	B	H	A	W
AP3A	1/4"	100	64	32	64	50

Specifications are subject to change without notice

SERIES : 32P

5/2 PILOT OPERATED, SINGLE/ DOUBLE SOLENOID, SUBBASE MOUNTED VALVE

TYPE	PRESSURE

TYPE	PRESSURE
57400	2 - 10 bar

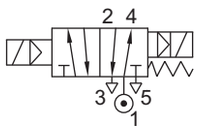

TYPE	PRESSURE
51400	2 - 10 bar
51404	2 - 10 bar

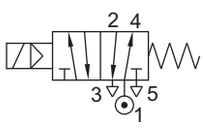

FEATURES

- Bubble tight shut off
- Mounts in any position
- Vibration resistance up to 9g
- Suitable for high speed cycling
- Speed up to 1000 cycles/ min for 51400 others 500 cycles/ min
- Life >10 million cycles
- O Rings and fasteners supplied loose with the valve

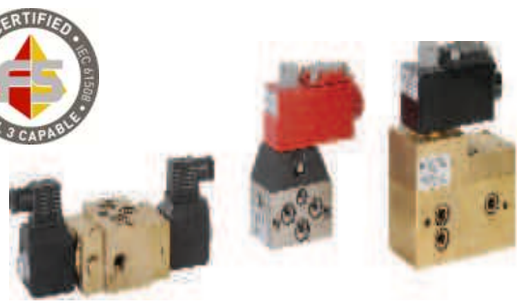

WETTED PARTS

Code	※	B1		B5
Body	Anodized Aluminium	Anodized Aluminium		SS 316
Internals	Aluminium, Brass and SS 316	SS 316		SS 316
Guide Assembly	SS 304			
Shadow-Ring	Copper/ Silver/ None			
Plunger, Insert	SS 430			
Spring/ Circlip	SS 302/ Steel			
Fasteners	SS 304			
Seat, Seals	NBR, Viton, F. Silicon			

※ Do not specify code if opted for. Refer Page # 22 for Value of ※

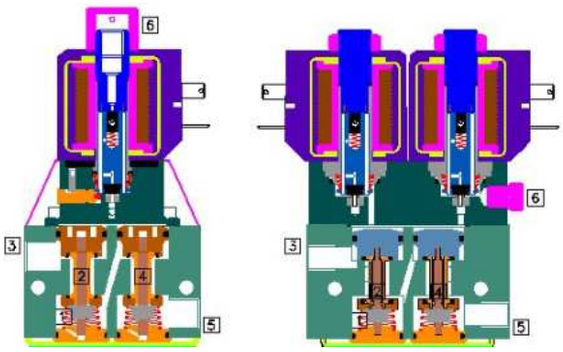

AMBIENT AND FLUID TEMPERATURE

-30 °C to 75 °C

SPECIAL VERSION AND SUFFIX

Suffix :(Valve) OX, AM
Special version : (Solenoid) CO, FR, SS, LC, III

MEDIA

Air, Inert Gases

APPLICATION

Operation of double acting cylinder/ actuator

PORT CONNECTION

INLET	OUTLET	OUTLET	EXHAUST	EXHAUST	PILOT EXHAUST
1	2	4	3	5	6

Contact Rotex for
- Any other ambient, fluid temperature, media and application
- UL listed, cULus Listed general purpose Valve
- Media like Water, Light Oil etc.

SPARES (Refer page 25 for ordering code)

SPARE KIT	CODE
Seal Kit : Oring Set and Plunger Assembly	98
Repair Kit : Oring Set, Plunger Assembly, Fastener, Springs, Manual Override, Guide Assembly, Piston Kit	99
Solenoid Kit : Solenoid, Gasket	34

APPROVAL (* applied for)

Approval	TYPE 4X, 6P	IP67	Ex d IIC T4 or T5 or T6 IP66	Ex ia IIC T6 IP67	DGMS	CCOE
		✓	✓	✓	✓	✓
CE		✓	✓	✓		
UL	✓		*			
CSA			✓	✓		
EAC			✓	✓		
IECEx			✓	✓		

The pressure drop at inlet port causes malfunction of the Valve. All equipment connected the header and the inlet port should have a higher orifice compared to the solenoid Valve.
Select Manifold MF003/ MF004/ MF010/ MF013
Electrical failure Stayput, Air failure to reset. Applicable for 57424.

5/2 PILOT OPERATED, SINGLE/ DOUBLE SOLENOID, SUBBASE MOUNTED VALVE

9

SPECIFICATION

PORT CONNECTION			PRE-SSURE bar		ORIFICE (mm)	FLOW FACTOR kv (LPM OF WATER @ 1 bar ΔP)	VALVE TYPE	PILOT PRESSURE	BODY MATERIAL AND INTERNALS				SEALS					MANUAL OVERRIDE			SOLENOID ENCLOSURE						SUFFIX		POWER VA			CONSTRUCTION REFERENCE NUMBER
																					WEATHER PROOF				EXPLOSION PROOF									
SIZE	BSP(F)	NPT(F)	MINIMUM	MAXIMUM					ALUMINIUM	ALUMINIUM + SS	BRASS	SS 316	NBR	Viton	EPDM	HYTREL	F. Silicon	NIL	STAYPUT CUM MOMENTARY	MOMENTARY	FLYING LEAD	PLUG IN, IP67	SQ. PLUG IN, IP67	TERMINAL BOX IP67	EXPLOSION PROOF IIC, IP67	LARGE ENCLOSURE	SOLENOID SIZE	OXYGEN	AMONIA	AC INRUSH	AC HOLDING	DC	
5/2 SINGLE SOLENOID VALVE																																
SB			2	10	6	12	51400		※			B5	※	S2			S19	M0	※	M8	F	22	25	T	E	III	14	✓	✓	18	12	8	720
			2	10	10	38	51404		※			B5	※	S2				M0	※	M8	F	22	25	T	E	III	14	✓	✓	18	12	8	722
5/2 DOUBLE SOLENOID VALVE																																
SB			2	10	6	12	57400		※			B5	※	S2			S19	M0		※	F	22		T	E		14	✓	✓	18	12	8	721

| SOLENOID 14 | | | | | | | | | | | | | | | | | | |

5/2 PILOT OPERATED, SINGLE/ DOUBLE SOLENOID, SUBBASE MOUNTED VALVE

DIMENSIONS

All Dimensions are in mm

CONSTRECTION REFERENCE : 721

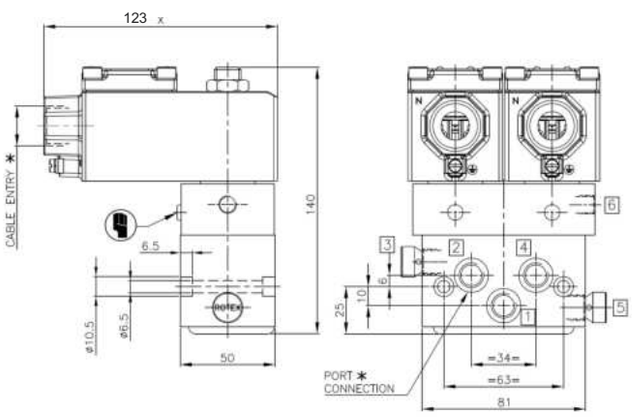

TERMINAL BOX/ Ex d LARGE ENCLOSURE, TYPE 16, 19, 37, 39, 58, 58LT

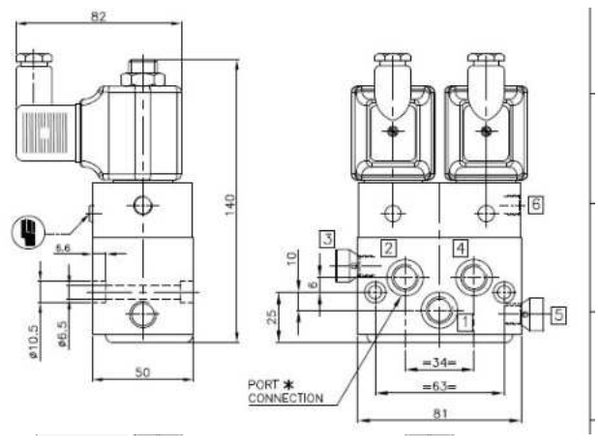

PLUG IN SOLENOID TYPE 22

5/2 INTERNAL PILOT OPERATED, SINGLE/ DOUBLE SOLENOID, SUBBASE MOUNTED VALVE

TYPE	PRESSURE

TYPE	PRESSURE
57445	2 - 10 bar

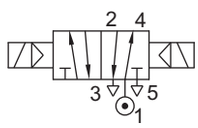

TYPE	PRESSURE
51445	2 - 10 bar

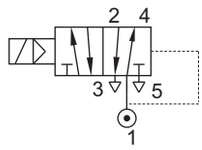





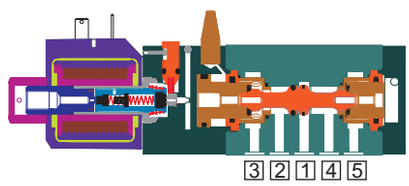

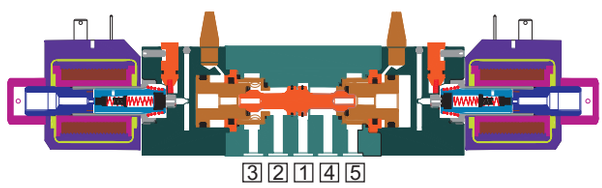

REFER CATALOGE BOOK OF

51445, 57445

3/2 AIR OPERATED, SPRING RETURN, SUBBASE MOUNTED POPPET VALVE

TYPE	PRESSURE

TYPE	PRESSURE

TYPE	PRESSURE
33123	0 - 20 bar

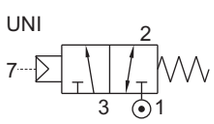



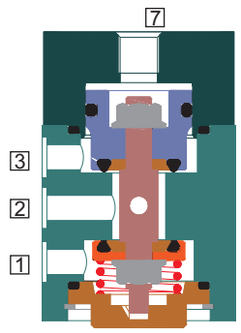

THIS MODEL IS DISCONTINUED.

CONTACT ROTEX IF MUST TO OFFER SPECIFIC

5/2 AIR OPERATED, SPRING RETURN, SUBBASE MOUNTED POPPET VALVE

TYPE	PRESSURE

TYPE	PRESSURE

TYPE	PRESSURE
53400	0 - 20 bar
53402	0 - 40 bar

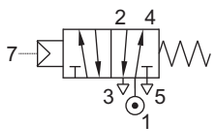







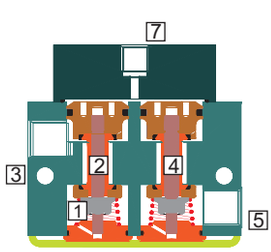

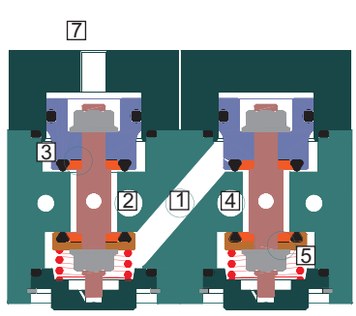

THIS MODEL IS DISCONTINUED.

CONTACT ROTEX IF MUST TO OFFER SPECIFIC

5/2 AIR OPERATED, SPRING/ AIR RETURN, SUBBASE MOUNTED VALVE

TYPE	PRESSURE

TYPE	PRESSURE
53445	0 - 16 bar

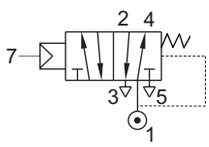

TYPE	PRESSURE
58445	0 - 16 bar

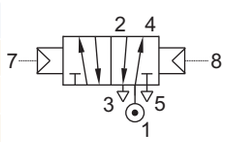

FEATURES

- Highly reliable rugged construction
- Positive Sealing and snap operation with poppet design
- Bubble tight shut off
- Vibration resistance up to 9g
- Suitable for high speed cycling
- Orifice up to 25mm, higher orifice available on request
- Life >10 million cycles
- Speed up to 1000 cycles/ min
- Larger exhaust for quick operation of the cylinder/ actuator
- Mounts in any position
- O Rings and fasteners supplied loose with the Valve



WETTED PARTS

Code	※	B1		B5
Body	Anodized Aluminium	Anodized Aluminium		SS 316
Internals	Aluminium, Brass and SS 316	SS 316		SS 316
Spring/ Circlip	SS 302			
Fasteners	SS 304			
Seat, Seals	NBR, Viton, F. Silicon			

※ Do not specify code if opted for. Refer Page # 22 for Value of ※

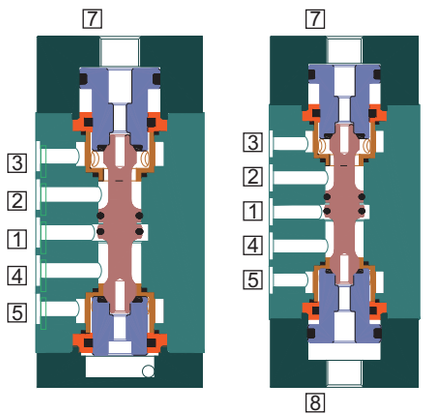

AMBIENT AND FLUID TEMPERATURE

-30 °C to 75 °C

SPECIAL VERSION AND SUFFIX

Suffix : (Valve) AM

SPARES

(Refer page 25 for ordering code)

SPARE KIT	CODE
Seal Kit : Oring Set	98
Repair Kit : Oring Set, Fastener, Springs	99

MEDIA

Air, Inert Gases, Oil, Water

PORT CONNECTION

INLET	OUTLET	OUTLET	EXHAUST	EXHAUST	EXTERNAL PILOT INLET	VALVE TYPE
1	2	4	3	5	7	53445
1	2	4	3	5	7 and 8	58445

Contact Rotex for
- Any other ambient, fluid temperature, media and application
- UL listed, cULus Listed general purpose Valve

The air pressure should be minimum 2 bar or ≥ main fluid pressure whichever is higher. Select Manifold MF008

OIL Media Temperature Restricted from 0 °C to 100 °C

Specifications are subject to change without notice

ROTEX
Engineering For The Future

5/2 AIR OPERATED, SPRING/ AIR RETURN, SUBBASE MOUNTED VALVE

SPECIFICATION

PORT CONNECTION			PRESSURE bar		ORIFICE (mm)	FLOW FACTOR kv (LPM OF WATER @ 1 bar ΔP)	VALVE TYPE	PILOT PRESSURE	BODY MATERIAL AND INTERNALS				SEALS					MANUAL OVERRIDE			SOLENOID ENCLOSURE							SUFFIX		POWER VA			CONSTRUCTION REFERENCE NUMBER
																					WEATHER PROOF				EXPLOSION PROOF									
SIZE	BSP(F)	NPT(F)	MINIMUM	MAXIMUM					ALUMINIUM	ALUMINIUM + SS	BRASS	SS 316	NBR	Viton	EPDM	HYTREL	F. Silicon	NIL	STAYPUT CUM MOMENTARY	MOMENTARY	FLYING LEAD	PLUG IN, IP67	SQ. PLUG IN, IP67	TERMINAL BOX IP67	FP JB Ex d IIC, T4 OR T6, IP67	LARGE ENCLOSURE	SOLENOID SIZE	OXYGEN	AMONIA	AC INRUSH	AC HOLDING	DC	
5/2 AIR OPERATED SPRING RETURN																																
SB			0	16	6	14	53445A	2-16	※			B5	※	S2			S19											✓					738
			0	16	12	50	53445	2-16	※			B5	※	S2														✓					739
			0	16	25	100	53445	2-16	※			B5	※	S2														✓					740
5/2 AIR OPERATED AIR RETURN																																
SB			0	16	6	14	58445A	2-16	※			B5	※	S2			S19											✓					741
			0	16	12	50	58445	2-16	※			B5	※	S2														✓					742
			0	16	25	100	58445	2-16	※			B5	※	S2														✓					743

※ = Do not specify when opted for. Refer Page # 22 for Value of ※
✓= Options available

* Valve type printed in red colour is external pilot air/ air operated valve

ORDERING CODE AND EXAMPLE

VALVE

VALVE TYPE – SUFFIX – ORIFICE – PORT CONNECTION – BODY AND INTERNALS – SEAL - MEDIA
e.g. 58445-6-SB

DIMENSIONS

All Dimensions are in mm

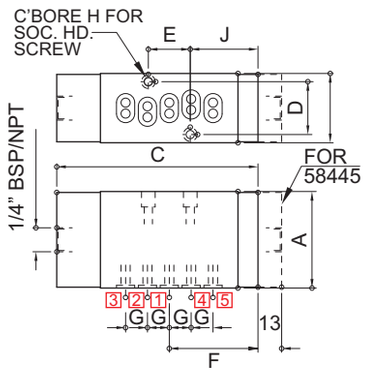

K (PORT SIZE)	A	B	C	D	E	F	G	H	J	CONST. REF.	C	CONST. REF.
VALVE TYPE : 53445											58445	
SUBBASE	53	38	111	29	49	49	12	M4	37	738	124	741
SUBBASE	75	45	144	36	66	66	18	M5	54.5	739	157	742
SUBBASE	110	65	193	80	92	92	28	M8	80.5	740	206	743

ADOPTER PLATE

Adopter plate is used for mounting 1 No. 53445/ 58445 valve.
This has individual inlet and outlets.
Pilot connection can be provided on the adopter plate

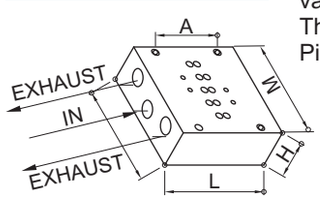

CODE	BSP	DESCRIPTION
AP5A	1/4" BSP/NPT	53445/58445
AP5D	3/8" BSP/NPT	53445/58445
AP5B	1/2" BSP/NPT	53445/58445
AP5E	3/4" BSP/NPT	53445/58445
AP5C	1" BSP/NPT	53445/58445

Specifications are subject to change without notice

MANIFOLD

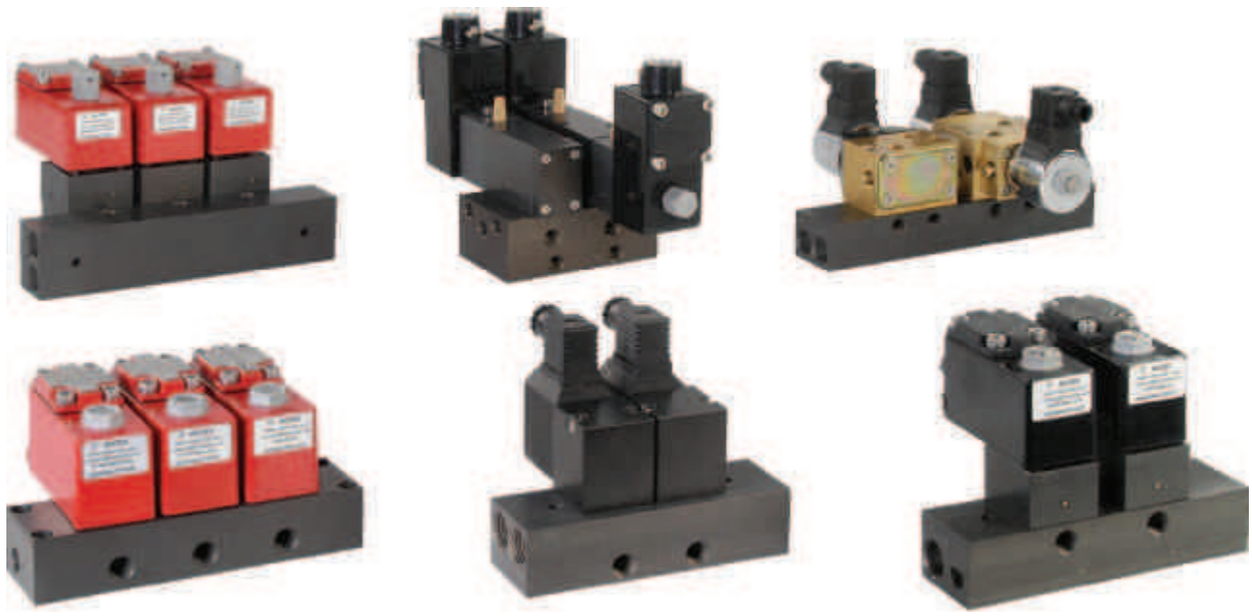

ROTEX supplies three types of Manifold for 2,3,4 and 5 port Solenoid Valves.

Manifold single sided : All the inlet ports of the Solenoid Valves are connected to this Manifold. Exhaust ports may be on the individual Solenoid Valve body or may be connected through a common hole.

Manifold Double Sided : This type of Manifold is same as Manifold single sided. However the Valves can be mounted on both sides of the manifold, there by reducing the length of the manifold.

Manifold with Isolation Cock : The inlet of the Solenoid Valve is connected to a common hole through an isolation Cock. For maintenance / Replacement of a Solenoid Valve, the isolation Cock is turned. This stops the supply of air to the Valve, without effecting the functioning of other Solenoid Valves mounted on the Manifold.

TYPE : MF001, MF002

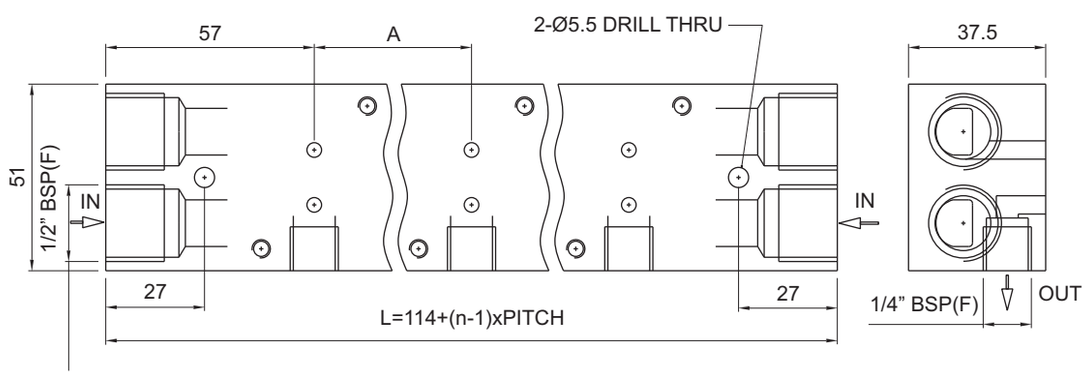

MANIFOLD TYPE	A	VALVE TYPE	MAX. Nos. OF VALVE/ MANIFOLD
MF 001	45	20108, 30111, 20208, 30211	12
MF 002	55	20109, 20209, 30112, 30212	10

n = Numbers of Valves to be mounted on a manifold

MANIFOLD

TYPE : MF003, MF004

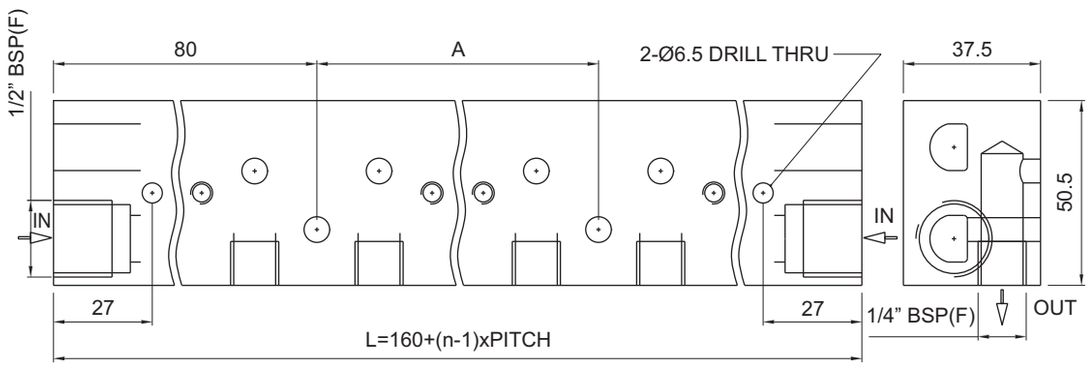

MANIFOLD TYPE	A	VALVE TYPE	MAX. NOs. OF VALVE/ MANIFOLD
MF 003	80	51400, 57408	6
		53400	
MF 004	85	57400, 57401	5

TYPE : MF005, MF006, MF007

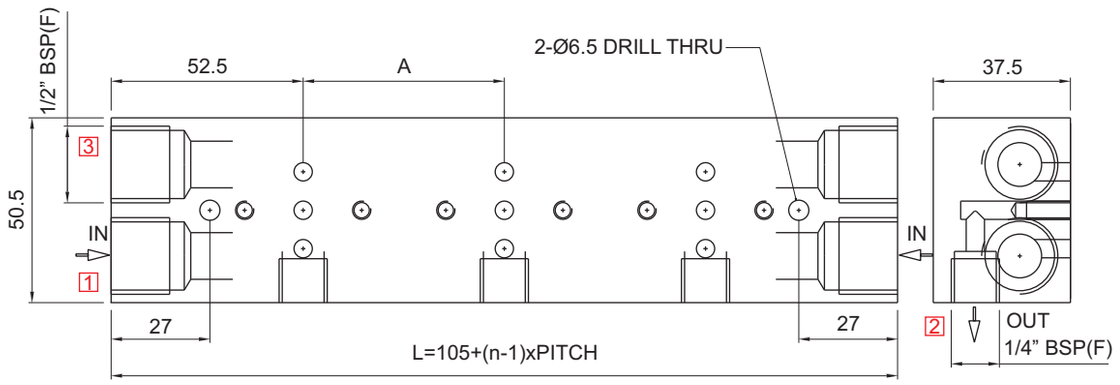

MANIFOLD TYPE	A	VALVE TYPE	MAX. NOs. OF VALVE/ MANIFOLD
MF 005	42	30316	12
MF 006	55	30317-7	9
MF 007	65	30317-10	8

TYPE : MF 008

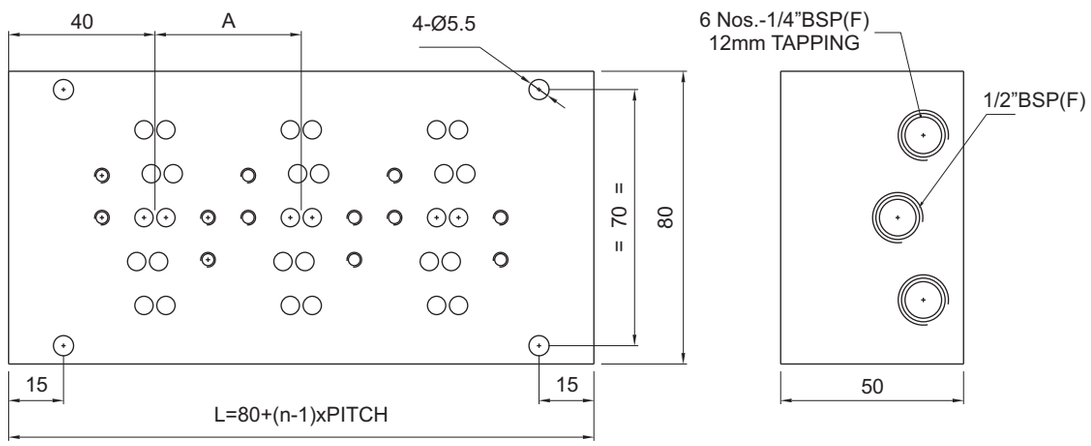

MANIFOLD TYPE	A	VALVE TYPE	MAX. NOs. OF VALVE/ MANIFOLD
MF 008	40	51445, 57445, 53445, 58445	14

TYPE : MF 009

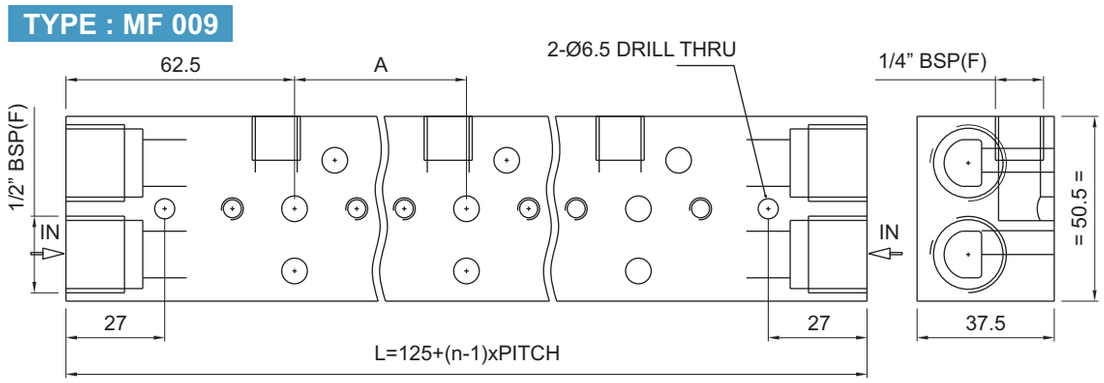

MANIFOLD TYPE	A	VALVE TYPE	MAX. NOs. OF VALVE/ MANIFOLD
MF 009	55	31123	8
		33123	
MF009A	55	3068	8
		31205	

Specifications are subject to change without notice

MANIFOLD

DOUBLE SIDED MANIFOLD

TYPE : MF 011, MF 012

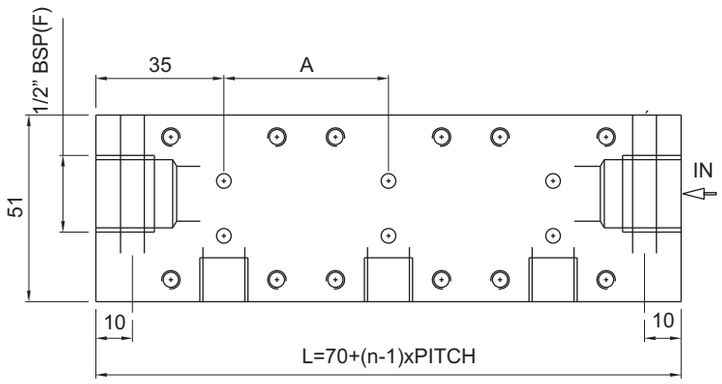

MANIFOLD TYPE	A	VALVE TYPE	MAX. NOs. OF VALVE/ MANIFOLD
MF 011	45	20108, 30111, 20208, 30211	12
MF 012	55	20109, 20209, 30112, 30212	10

TYPE : MF 013

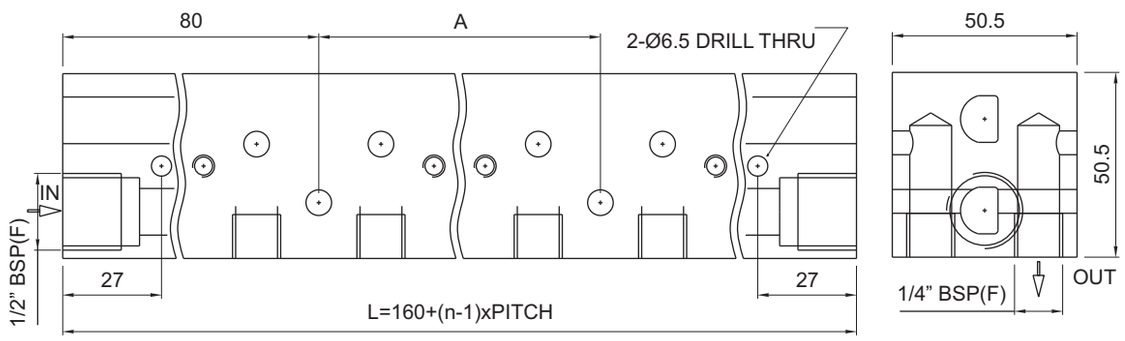

MANIFOLD TYPE	A	VALVE TYPE	MAX. NOs. OF VALVE/ MANIFOLD
MF 013	91	51400, 57400 57408, 53400	5

MANIFOLD WITH ISOLATION COCK

TYPE : MF 014

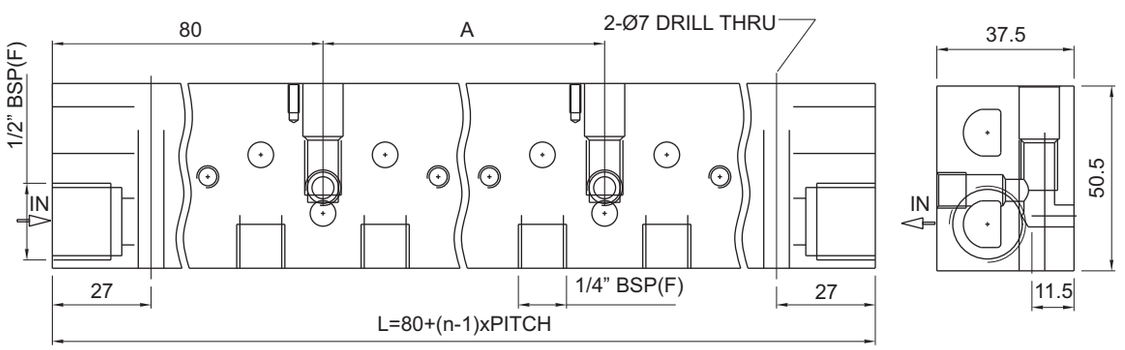

MANIFOLD TYPE	A	VALVE TYPE	MAX. NOs. OF VALVE/ MANIFOLD
MF 014	91	51400, 57400 57408, 53400	5

TYPE : MF 015

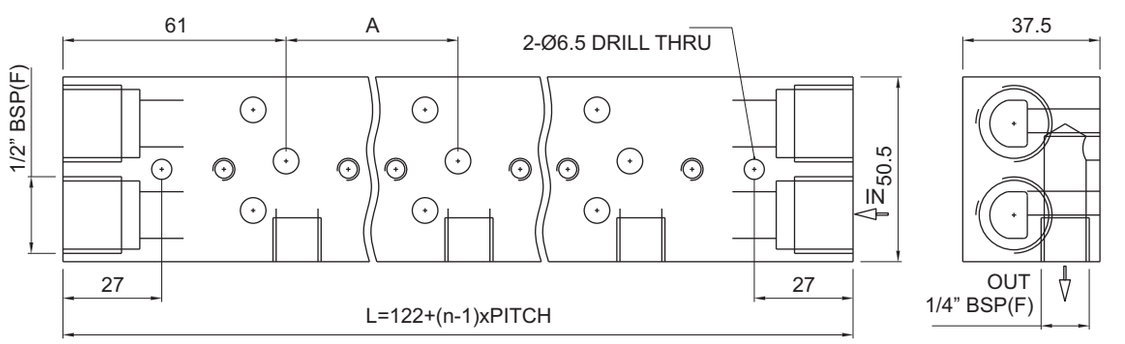

MANIFOLD TYPE	A	VALVE TYPE	MAX. NOs. OF VALVE/ MANIFOLD
MF 015	42	30316	12

MANIFOLD

TYPE : MF 016

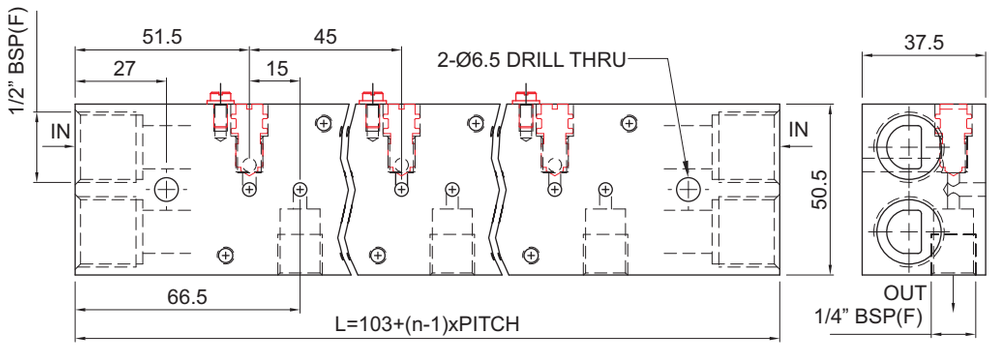

MANIFOLD TYPE	A	VALVE TYPE	MAX. NOs. OF VALVE/ MANIFOLD
MF 016		30111, 30211	12
		30112, 30212	
		20108, 20208	
		20109, 20209	

TYPE : MF 017

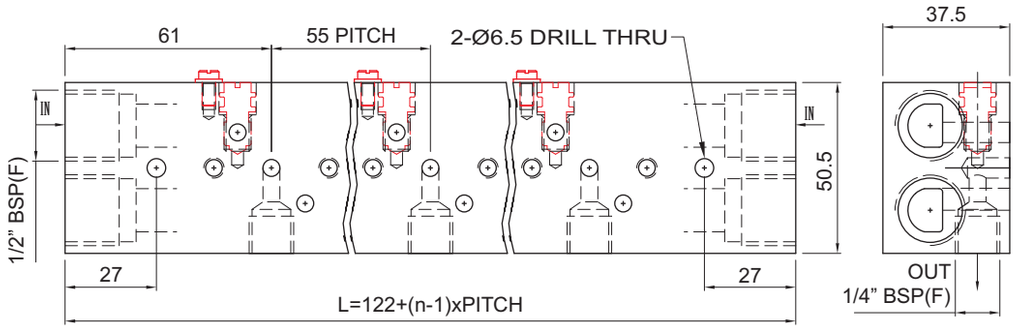

MANIFOLD TYPE	A	VALVE TYPE	MAX. NOs. OF VALVE/ MANIFOLD
MF 017	41	30316	12
MF 018	55	30317V01	10
MF 044	55	30333V01	10

ORDERING CODE Manifold

MANIFOLD TYPE	SPACE	PORT	CONNECTION	MANIFOLD MATERIAL	ACCESSORIES	VALVE CODE	NUMBER OF VALVE
Specify Manifold Type	No. of Valves + Blanking Plate	※	BSP	※	Refer to Valve Accessories page	Specify Valve Code String	Specify Number of Valves
		R	NPT	ALUMINIUM			

SOLENOID CODE	ACCESSORIES SOLENOID
Specify Solenoid Code	Refer to Solenoid Accessories page

Specifications are subject to change without notice

ENGINEERED VALVES

Engineered Valves are essentially a group of Solenoid valves which have been designed in terms of performance, power consumption or protection to suit the most demanding application in the process Industries.

These valves offer high technical solution to various application calling for a control element beyond a conventional Solenoid Valve by combining advanced designs, new production techniques and testing.

ROTEX offers a wide range of solutions under this program classified under five categories:

1 Intrinsically Safe Solenoid Valve
2 Manual Reset Solenoid Valve
3 Low Power Solenoid Valve
4 Impulse Operated Valve with Latch type Solenoid
5 Redundant Solenoid Valve

All these valves feature changes in either internal components or External shape and thus are classified under a completely new series.

Many of these solutions were identified differently prior to the release of this catalogue. ROTEX can provide the equivalent Model identification from earlier series to new series for the convenience of the customer. Please contact ROTEX for more details.

Some of the solutions from above range are also available in the NAMUR and Pulse Jet Valve Program. Please refer the relevant Catalogue of these valve for more details.

TYPE	ACTION	ORIFICE mm	PRESSURE bar	PAGE NO.
INTERINSICALLY SAFE SOLENOID VALVE				
2, 3, 5 Port Solenoid Valves with	NC, NO, UNI			
Intrinsically Safe Solenoid having booster circuit	MONO, BISTABLE	1.2 To 50	0 - 30	214
2, 3, 5 Port Solenoid Valve with low	NC, NO, UNI			
Power Intrinsically safe Solenoid	MONO, BISTABLE	1 To 25	0 - 10	216
MANUAL RESET SOLENOID VALVE				
2, 3, 5 Port Solenoid Valves with	NC, NO, UNI			
Manual Reset (On)	Single	1.2 To 50	0 - 25	230
2, 3, 5 Port Solenoid Valves with	NC, NO, UNI			
Manual Reset (On) with Intrinsically Safe Solenoid	MONO	1.2 To 50	0 - 25	236
3 Port tamper proof Manual Reset Solenoid Valve	NC, NO, UNI	5 To 25	0 - 20	233
2, 3, 5 Port Manual Reset OFF Solenoid Valve	NC, NO, UNI, MONO	1.2 To 50	0 - 25	239
LOW POWER SOLENOID VALVE				
2, 3, 5 Port Solenoid Valves with low	NC, NO, UNI			
Power (5 W, 2 W, 0.5 W) Solenoid	MONO, BISTABLE	1 To 25	0 - 10	243
LATCHED SOLENOID VALVE				
2, 3, 5 Port Solenoid Valve with	NC, NO, UNI			
Latched Solenoid	MONO	1.2-50	0 - 25	248
REDUNDENT SOLENOID VALVE				
2, 3, 5, Port Valve with	NC, NO, UNI			
Redundent Solenoid	MONO	1.2 To 50	0 - 25	252

INTRINSICALLY SAFE SOLENOID VALVE WITH BOOSTER CIRCUIT

By lowering the power Consumption below the ignition energy level the Solenoid valve is inhibited from being the cause of an explosion. Thus the term Intrinsically Safe Solenoid Valve.

Intrinsically Safe Solenoid valve offers the highest protection available for product installed in Hazardous/ Explosive environment.

With protection class Ex ia, IIC, T6 this Solenoid valve can be installed in application/ equipment falling under zone 0, zone1 and zone 2. (Ex ia certified equipment is only permitted to be used in zone 0 area).

It is worth remembering that Intrinsic Safety is for a complete circuit, of which solenoid valve is one component along with a certified Barrier (check compatibility list, page 435.) In absence of the Barrier, the valve is merely a low power consuming device, which then depending upon the type of enclosure used may not be suitable for installing in Hazardous area.

All of ROTEX Intrinsically safe Solenoid solutions are certified Ex ia IIC, T6.

ROTEX offers two types of solutions; Booster circuit based Intrinsic safety and Low Power Intrinsic safety.

Booster circuit design (Type 62, 63, 64) :

Intrinsically safe Solenoid uses a capacitor based storage circuit, which stores the limited power coming from the Barrier before firing it across the Winding. The circuit then continues to hold the plunger with the Barrier power. With this technique, the IS Solenoid can replace an existing solenoid valve having general purpose weather proof or Explosion proof Solenoid.

This option is practically available to most solenoid valve with solenoid size 14. For details, refer the Quick reference Charts from Page 219 to 227 , where ‘I” is marked in the column titled “IS with Circuit”.

The ON time delay of 1.5 second needs to be accounted for while calculating system response time, which may not be suitable for certain applications. This solenoid can certainly be used for shut down/ trip circuit applications.

In view of this, ROTEX also offers another solution with faster response, typically called for in process Industry, especially in fast switching equipment.

ROTEX intrinsic safe coil with circuit can operate most of the solenoid valve having solenoid size 14 without affecting any of its parameter.

Specifications are subject to change without notice

WORKING PRINCIPLE OF INTRINSICALLY SAFE SOLENOID VALVE Ex ia IIC, T6



FEATURES

- Aluminium/ Stainless Steel cast enclosure
- Interchangeable to weather proof and explosion proof solenoid size 14
- Response on time <1.5 sec.
- Compatible to most available barrier
- Dual protection Ex ia and Ex d
- Suitable to operate any of the valve having Solenoid size 14 (except 30308, 30316, 30318, 30333, 30334)

AMBIENT TEMPERATURE

-60 ºC to 70 ºC

APPROVAL

ATEX, INMETRO, INDIAN: CCOE, DGMS, BIS, GOST, IEC Ex

MINIMUM OPERATING PARAMETER

Minimum operating voltage 14 V DC
Minimum operating current 14 mA
Minimum operating power 0.2 W

ENTITY PARAMETER

Voltage V DC	Ui < 32 V
Current mA	Ii<230mA
Power	Pi = 2.3 W
Inductance	Li = 0
Capacitance	Ci = 0



ENCLOSURE MATERIAL

Aluminium cast
Stainless Steel cast

MEDIA

Air, Inert Gases, Water, Oil

CABLE ENTRY

Code	Cable Entry
62NS, 62MS	1/2" NPT
66NS, 66MS	M20 X 1.5
62, 66	M25 X 1.5

SPECIFICATION

Ex ia, (d) IIC, T6

- OIL Media Temperature Restricted from 0 °C to 100 °C

Specifications are subject to change without notice

ROTEX
Engineering For The Future

LOW POWER INTRINSICALLY SAFE SOLENOID VALVE

Low power Intrinsic Safety Solenoid System works with a High Efficiency pilot operator to ensure maximum flux linkage between core and plunger, thus improving pulling force.

The maximum allowable orifice for the pilot valve is smaller than the Non IS Solenoid valve and IS solenoid valves using Booster Circuit. However the flow Orifice and the pressure rating are higher than most other makes in a similar class thus offering a more reliable operation and a longer life.

The ROTEX Lower Power Intrinsically safe Solenoid Valve is suitable for 210 um filtered air having a -20°C Dew point. The valve is most suitable to harsh operating conditions and results in a trouble free operation.

Power consumption of 0.14 Watt at 12V DC is also the lowest, in a similar class, demonstrating the advanced technology being used by ROTEX in these valves.

The valves are directly compatible to remote I/O terminals of various manufacturers like Simens, ABB, Turk, MTL and Stahl etc. for use in field BUS applications involving PROFIBUS DP-IS and PROFIBUS PA networks.

Since there is a change in the valve construction, this group of Valves have been classified under a new range with a wide variety of solutions in 2 port, 3 port, and 5 port configuration in both Direct acting and pilot operated versions.
Three different Solenoid constructions are available depending on the cabling needs :

DIN Plug (Type 65CR), suitable for flexible cable with a PG9 cable entry.

With Integral Terminal Box (Type 67) in epoxy coated Aluminium or (Type 67-CO) SS 316 construction suitable for armoured cable with gland (mainly for applications in Hydro carbon, Oil and Gas and Petrochemical industries, requiring high safety from Explosion Risk).

Rotex intrinsically safe Solenoid is certified as per IS/ EN/ IEC 60079-0 and 60079-18 for Ex ia IIC T6 standards
ROTEX have ATEX, INDIAN : CCOE, DGMS, INMETRO, Cu-TR Approval.

ROTEX also offers a complete range of NAMUR solenoid valve with intrinsic Safety. For more details Refer page 305 to 340.

10

BARRIER SELECTION

LEGAL CRITERIA

To meet requirement of installing Valves with Intrinsically safe Solenoid zone 1, or zone 2, Power to the Intrinsically Safe Solenoid has to be sup Zener Diode, Solenoid Driver, Remote I/O (Power Source).

For meeting safety, it is essential to select and match entity parameter Field Device (Solenoid Valve) being installed in the hazardous environm Parameters of the Power Source

Ui, Ii, Pi, Ci, Li are the Entity Parameters of the Field Device Ui (Voltag solenoid (Field Device) should be more than Uo (Voltage), Io (Current),

i.e. (≥Uo, ≥Ii Io, ≥Pi Po)

Ci (Capacitance), Li (Inductance) of the field device and Cc (Capacitanc should be less than Co (Capacitance), Lo (Inductance) of the Power Sou

i.e.(Ci + Cc "d Co Li + Lc "d Lo)

FUNCTIONAL CRITERIA

Barrier Data

Output Volt @ Zero Current (V_{B0}) : _____ Volt
Output Volt @ Maximum Current (V_{BM}) : _____ Volt
Maximum Output Current (I_B) : _____ mA

Solenoid Data

Minimum Operating Volt (V_C) : _____ Volt
Minimum Operating Current (I_C) : _____ mA

Permissible Cable Length (CL)

Resistance Based

Maximum Allowable Cable Resistance (R_C) Ohm
$Rc = [V_{B0} – ((V_{B0}-V_{BM}) * I_C / I_B)] * 1000/ I_C$
Allowable Maximum Cable Length (CL_R)should have Resistance ≤ R_C

WORKING PRINCIPLE OF LOW POWER INTRINSICALL

Capacitance Based

Allowable Capacitance of the Barrier (C_o)
Cable Capacitance (C_c)
Coil Capacitance (C_i) : C_i = 0 (for ROTEX IS Solenoid)
$C_o \geq C_c + C_i$
Allowable Maximum Cable Length (CL_c) should have Capacitance ≤ C_o

Inductance Based

Allowable Inductance of the Barrier (L_B)
Cable Inductance (L_c)
Solenoid Inductance (L_s) : L_s = 0 (for ROTEX IS Solenoid)
$L_o \geq L_c + L_i$
Allowable Maximum Cable Length (CL_L) should have Inductance ≤ L_o

CL should be minimum of CL_R, CL_c, CL_L

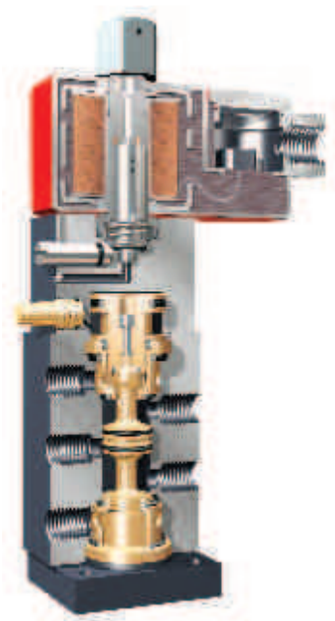

FEATURES

- Highly efficient magnetic linkage for achieving better operating Parameters
- Can be supplied with DIN plug, Terminal box and Ex d enclosure made of Aluminium/ Stainless steel cast

APPROVAL

ATEX, INMETRO CMRI : CCOE, DGMS, BIS, GOST, IEC Ex

MINIMUM OPERATING PARAMETERE

Minimum operating voltage 14 V DC
Minimum operating current 14 mA
Minimum operating power 0.14 W
Inductance : 0
Capacitance : 0

AMBIENT TEMPERATURE

-60 ºC to 75 ºC

ENTITY PARAMETERE

Voltage V DC	Ui < 32 V
Current ma	Ii < 230mA
Power	Pi = 0.75 W
Inductance	Li = 0
Capacitance	Ci = 0

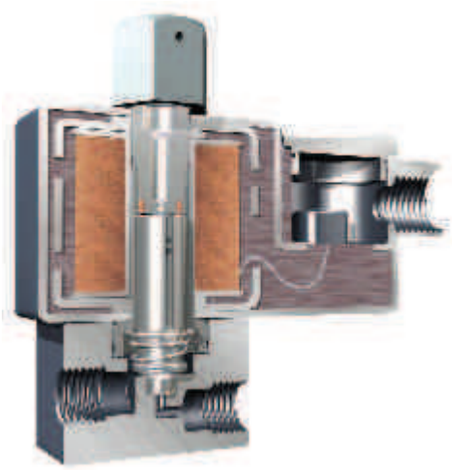

CABLE ENTRY

Code	Cable Entry	
	M20 X 1.5	1/2" NPT
TB	68	67
Ex d	73	72
PLUGIN	65CR	

MEDIA

Air, Inert Gases, Water, Oil

SPECIFICATION

Ex ia IIC, T6

- OIL Media Temperature Restricted from 0 °C to 100 °C

Specifications are subject to change without notice

LOW POWER INTRINSICALLY SAFE SOLENOID VALVE



3/2 Direct Acting Solenoid Valve
Type: I3001

3/2 Internal Pilot Operated Valve
Type: I3003 NC

Refer Small Cataloge Book

Universal Valve
Type: I3004 Ext

Refer Small Cataloge Book



5/2 Single/ Double
Solenoid Valve
Type: I5001 Single Solenoid,
I5002 Double Solenoid

5/2 Single/Double inline Poppet
Solenoid Valve
Type: I5005 Single Solenoid,
I5006 Double Solenoid

Refer Small Cataloge Book

Contact Rotex for
- Any other ambient, fluid temperature, media and application
- UL listed, c(UL)us Listed general purpose Valve

Electrical failure Stayput, Air failure to reset. Applicable for I5002.
OIL Media Temperature Restricted from 0 °C to 100 °C

Specifications are subject to change without notice

2/2 NORMALLY CLOSED, INTRINSICALLY SAFE SOLENOID VALVE

SPECIFICATION

PORT CONNECTION			PRESSURE bar		ORIFICE (mm)	FLOW FACTOR kv (LPM OF WATER @ 1 bar ΔP)	VALVE TYPE	PILOT PRESSURE	BODY MATERIAL AND INTERNALS				SEALS				MANUAL OVERRIDE			SOLENOID ENCLOSURE EXPLOSION PROOF Ex ia IIC,T6,IP67					SUFFIX		POWER VA			CONSTRUCTION REFERENCE NUMBER
SIZE	BSP(F)	NPT(F)	MINIMUM	MAXIMUM					ALUMINIUM	ALUMINIUM + SS	BRASS (STD. PORT NPT)	SS 316/ CF8 (STD. PORT NPT)	NBR	Viton	EPDM	HYTREL	NIL	STAYPUT CUM MOMENTARY	MOMENTARY	LOW POWER IS PLUG IN	LOW POWER IS TERMINAL BOX	Low Power IS FPJB Ex d	IS Coil With Circuit Ex ia (d)IIC, T6, IP67	SOLENOID SIZE	OXYGEN	AMONIA	AC INRUSH	AC HOLDING	DC	
2/2 NORMALLY CLOSED																														
1/8"	1G	1R																												
			0	20	1.8	1.8	20101		※		B2	B5	※	S2	S1		※	M6	M8				I	14	✓	✓			0.5	A
			0	2.5	5	9	20101		※		B2	B5	※	S2	S1		※	M6	M8				I	14	✓	✓			0.5	A
			0	4	4	7	20101		※		B2	B5	※	S2	S1		※	M6	M8				I	14	✓	✓			0.5	A
			0	6	3.5	5	20101		※		B2	B5	※	S2	S1		※	M6	M8				I	14	✓	✓			0.5	A
			0	8	3	4	20101		※		B2	B5	※	S2	S1		※	M6	M8				I	14	✓	✓			0.5	A
1/4"	2G	2R																												
			0	12	2.5	3.5	20101		※		B2	B5	※	S2	S1		※	M6	M8				I	14	✓	✓			0.5	A
			0	15	2.2	2.5	20101		※		B2	B5	※	S2	S1		※	M6	M8				I	14					0.5	A
			0	20	1.8	1.8	20101		※		B2	B5	※	S2	S1		※	M6	M8				I	14	✓	✓			0.5	A
			0	25	1.6	1.4	20101		※		B2	B5	※	S2	S1		※	M6	M8				I	14	✓	✓			0.5	A
			0	2.5	5	9	20101		※		B2	B5	※	S2	S1		※	M6	M8				I	14	✓	✓			0.5	B
3/8"	3G	3R	0	4	4	7	20101		※		B2	B5	※	S2	S1		※	M6	M8				I	14	✓	✓			0.5	B
			0	8	3	4	20101		※		B2	B5	※	S2	S1		※	M6	M8				I	14	✓	✓			0.5	B
			0	2.5	5	9	20101		※		B2	B5	※	S2	S1		※	M6	M8				I	14	✓	✓			0.5	B
			0	4	4	7	20101		※		B2	B5	※	S2	S1		※	M6	M8				I	14	✓	✓			0.5	B
			0	6	3.5	5	20101		※		B2	B5	※	S2	S1		※	M6	M8				I	14	✓	✓			0.5	B
			0	8	3	4	20101		※		B2	B5	※	S2	S1		※	M6	M8				I	14	✓	✓			0.5	B
			0.5	10	12	60	24101		※			B12		S2	S1	※	※	M6	M8				I	14	✓	✓			0.5	857
			0.7	10	12	60	21101		※		B2	B12	※	S2	S1		M0	※	M8				I	14		✓			0.5	983
1/2"	4G	4R	0	12	2.5	3.5	20101		※		B2	B5	※	S2	S1		※	M6	M8				I	14	✓	✓			0.5	B
			0	12	12	60	23104	2-10	※				※	S2	S1		M0	※	M8				I	14	✓	✓			0.5	857
			0	15	2.2	2.5	20101		※		B2	B5	※	S2	S1		※	M6	M8				I	14	✓	✓			0.5	B
			0	20	1.8	1.8	20101		※		B2	B5	※	S2	S1		※	M6	M8				I	14	✓	✓			0.5	B
			1	20	12	60	24102		※			B12		S2	S1	※	※	M6	M8				I	14	✓	✓			0.5	857
			1	20	12	60	21102		※		B2	B12	※	S2	S1		M0	※	M8				I	14		✓			0.5	983
			0	20	12	60	22101	2-20	※		B2	B12	※	S2	S1		M0	※	M8				I	14	✓	✓			0.5	873
			0	20	12	60	23103	2-20	※				※	S2	S1		M0	※	M8				I	14	✓	✓			0.5	881
			0.5	10	20	110	24101		※			B12		S2	S1	※	※	M6	M8				I	14	✓	✓			0.5	858
			0.7	10	20	110	21101		※		B2	B12	※	S2	S1		M0	※	M8				I	14		✓			0.5	984
			0.5	10	20	110	24100					B12		S2	S1	※	M0	※	M8				I	14	✓	✓			0.5	893
3/4"	6G	6R	0	12	20	110	23104	2-10	※				※	S2	S1		M0	※	M8				I	14	✓	✓			0.5	888
			1	20	20	110	24102		※			B12		S2	S1	※	※	M6	M8				I	14	✓	✓			0.5	858
			1	20	20	110	21102		※		B2	B12	※	S2	S1		M0	※	M8				I	14		✓			0.5	984
			0	20	20	110	22101	2-20	※		B2	B12	※	S2	S1		M0	※	M8				I	14	✓	✓			0.5	874
			0	20	20	110	23103	2-20	※				※	S2	S1		M0	※	M8				I	14	✓	✓			0.5	882

Cable Entry	Ex ia	
M20 x 1.5	66MS	67MS
M25 x 1.5	66	67
1/2" NPT	66NS	67NS

※ = Do not specify when opted for. Refer Page # 22 for Value of ※
✓= Options available
* Valve type printed in red colour is external pilot air/ air operated valve
* Valve can be supplied with Floro Silicon Seats.

Code	Construction Reference
A	851, 853

ROTEX
Engineering For The Future

2/2 NORMALLY CLOSED, INTRINSICALLY SAFE SOLENOID VALVE

SPECIFICATION

PORT CONNECTION			PRESSURE bar		ORIFICE (mm)	FLOW FACTOR kv (LPM OF WATER @ 1 bar ΔP)	VALVE TYPE	PILOT PRESSURE	BODY MATERIAL AND INTERNALS				SEALS				MANUAL OVERRIDE			SOLENOID ENCLOSURE					SUFFIX		POWER VA			CONSTRUCTION REFERENCE NUMBER
																				EXPLOSION PROOF Ex ia IIC,T6,IP67										
SIZE	BSP(F)	NPT(F)	MINIMUM	MAXIMUM					ALUMINIUM	ALUMINIUM + SS	BRASS (STD. PORT NPT)	SS 316/ CF8 (STD. PORT NPT)	NBR	Viton	EPDM	HYTREL	NIL	STAYPUT CUM MOMENTARY	MOMENTARY	LOW POWER IS PLUG IN	LOW POWER IS TERMINAL BOX	Low Power IS FPJB Ex d	IS Coil With Circuit Ex ia (d)IIC, T6, IP67	SOLENOID SIZE	OXYGEN	AMONIA	AC INRUSH	AC HOLDING	DC	
2/2 NORMALLY CLOSED																														
1"	8G	8R	0.2	5	25	185	24115		※			B12	※	S2			※	M6	M8				I	14	✓	✓			0.5	894
			0.5	10	25	185	24109		※		B2	B12		S2	S1	※	※	M6	M8				I	14	✓	✓			0.5	862
			0.7	10	25	185	21101V01		※			B12	※	S2	S1		M0	※	M8				I	14		✓			0.5	985
			0.5	10	25	185	24100				B2	B12		S2	S1	※	※	M6	M8				I	14	✓	✓			0.5	894
			0	12	25	185	23104	2-10	※				※	S2	S1		M0	※	M8				I	14	✓	✓			0.5	889
			1	20	25	185	24102V01		※			B12		S2	S1	※	※	M6	M8				I	14	✓	✓			0.5	861
			1	20	25	185	21102V01		※		B2	B12	※	S2	S1		M0	※	M8				I	14		✓			0.5	985
			0	20	25	185	22101V01	2-20	※		B2	B12	※	S2	S1		M0	※	M8				I	14	✓	✓			0.5	875
			0	20	25	185	23103	2-20	※				※	S2	S1		M0	※	M8				I	14	✓	✓			0.5	883
11/4"	10G	10R	0.2	5	40	400	24115					B12	※	S2			※	M6	M8				I	14	✓	✓			0.5	895
			0.5	10	40	400	24101					B12		S2	S1	※	※	M6	M8				I	14	✓	✓			0.5	862
			0.7	10	40	400	21101		※		B2	B12	※	S2	S1		M0	※	M8				I	14		✓			0.5	933
			0.5	10	40	400	24100					B12		S2		※	※	M6	M8				I	14	✓	✓			0.5	895
			0.5	10	40	400	24100					B12		S2	S1	※	※	M6	M8				I	14	✓	✓			0.5	895
			0	12	40	400	23104	2-10	※				※	S2	S1		M0	※	M8				I	14	✓	✓			0.5	890
			1	20	40	400	24102					B12		S2	S1	※	※	M6	M8				I	14	✓	✓			0.5	897
			1	20	40	400	21102		※		B2	B12	※	S2	S1		M0	※	M8				I	14		✓			0.5	986
			0	20	40	440	22101	2-20	※		B2	B12	※	S2	S1		M0	※	M8				I	14	✓	✓			0.5	879
			0	20	40	440	23103	2-20	※				※	S2	S1		M0	※	M8				I	14	✓	✓			0.5	894
11/2"	12G	12R	0.2	5	40	440	24115					B12	※	S2			※	M6	M8				I	14	✓	✓			0.5	895
			0.5	10	40	440	24101					B12		S2	S1	※	M0	M6	M8				I	14	✓	✓			0.5	863
			0.7	10	40	440	21101		※		B2	B12	※	S2	S1		※	※	M8				I	14		✓			0.5	987
			0.5	10	40	440	24100					B12		S2		※	※	M6	M8				I	14	✓	✓			0.5	895
			0.5	10	40	440	24100					B12		S2	S1	※	※	M6	M8				I	14	✓	✓			0.5	895
			0	12	40	440	23104	2-10	※				※	S2	S1		※	※	M8				I	14	✓	✓			0.5	891
			1	20	40	440	24102					B12		S2	S1	※	M0	※	M8				I	14	✓	✓			0.5	863
			1	20	40	440	21102		※		B2	B12	※	S2	S1		M0	※	M8				I	14		✓			0.5	987
			0	20	40	650	22101	2-20	※		B2	B12	※	S2	S1		M0	※	M8				I	14	✓	✓			0.5	879
			0	20	40	650	23103	2-20	※				※	S2	S1		※	※	M8				I	14	✓	✓			0.5	885
2"	16G	16R	0.2	5	50	650	24115					B12	※	S2			※	M6	M8				I	14	✓	✓			0.5	896
			0.5	10	50	650	24101V01					B12		S2		※	※	M6	M8				I	14	✓	✓			0.5	864
			0.7	10	50	650	21101V01		※		B2	B12	※	S2			M0	※	M8				I	14		✓			0.5	988
			0.5	10	50	650	24100					B12		S2		※	※	M6	M8				I	14	✓	✓			0.5	896
			0.5	10	50	650	24100					B12		S2	S1	※	※	M6	M8				I	14	✓	✓			0.5	896
			0	12	50	650	23104	2-10	※				※	S2	S1		※	※	M8				I	14	✓	✓			0.5	892
			1	20	50	650	24102V01					B12		S2	S1	※	※	M6	M8				I	14	✓	✓			0.5	864
			1	20	50	650	21102V01	2-20	※		B2	B12	※	S2	S1		M0	※	M8				I	14		✓			0.5	988
			0	20	50	650	22101V01	2-20	※		B2	B12	※	S2	S1		M0	※	M8				I	14	✓	✓			0.5	880
			0	20	50	650	23103		※				※	S2	S1		M0	※	M8				I	14	✓	✓			0.5	886
21/2"	20G	20R	0.5	10	65	800	24101					B12		S2		※	※	M6	M8				I	14		✓			0.5	886
			1	20	65	800	24102					B12		S2		※	※	M6	M8				I	14	✓	✓			0.5	886
3"	24G	24R	0.5	10	80	1000	24101					B12		S2		※	※	M6	M8				I	14		✓			0.5	886
			1	20	80	1000	24102					B12		S2		※	※	M6	M8				I	14	✓	✓			0.5	886

Cable Entry	Ex ia
M20 x 1.5	66MS 67MS
M25 x 1.5	66 67
1/2" NPT	66NS 67NS

※ = Do not specify when opted for. Refer Page # 22 for Value of ※
✓= Options available
* Valve type printed in red colour is external pilot air/ air operated valve

Code	Construction Reference
A	851, 853
B	852, 980

Specifications are subject to change without notice

2/2 NORMALLY OPEN, INTRINSICALLY SAFE SOLENOID VALVE

SPECIFICATION

PORT CONNECTION			PRE-SSURE bar						PILOT PRESSURE	BODY MATERIAL AND INTERNALS				SEALS				MANUAL OVERRIDE			SOLENOID ENCLOSURE EXPLOSION PROOF Ex ia IIC,T6,IP67					SUFFIX		POWER VA			CONSTRUCTION REFERENCE NUMBER
SIZE	BSP(F)	NPT(F)	MINIMUM	MAXIMUM	ORIFICE (mm)	FLOW FACTOR kv (LPM OF WATER @ 1 bar ΔP)	VALVE TYPE			ALUMINIUM	ALUMINIUM + SS	BRASS (STD. PORT NPT) SS 316/ CF8 (STD. PORT NPT)		NBR	Viton	EPDM	HYTREL	NIL	STAYPUT CUM MOMENTARY	MOMENTARY	LOW POWER IS PLUG IN	LOW POWER IS TERMINAL BOX	Low Power IS FPJB Ex d	IS Coil With Circuit Ex ia (d)IIC, T6, IP67	SOLENOID SIZE	OXYGEN	AMONIA	AC INRUSH	AC HOLDING	DC	
2/2 NORMALLY OPEN																															
1/8"	1G	1R	0	10	1.8	1.8	20201			※		B2	B5	※	S2	S1		※	M6	M8				I	14	✓	✓			0.5	A
1/4"	2G	2R	0	4	3	4	20201			※		B2	B5	※	S2	S1		※	M6	M8				I	14	✓	✓			0.5	A
			0	6	2.5	3.5	20201			※		B2	B5	※	S2	S1		※	M6	M8				I	14	✓	✓			0.5	A
			0	8	2.2	2.5	20201			※		B2	B5	※	S2	S1		※	M6	M8				I	14	✓	✓			0.5	A
			0	10	1.8	1.8	20201			※		B2	B5	※	S2	S1		※	M6	M8				I	14	✓	✓			0.5	A
			0	15	1.6	1.4	20201			※		B2	B5	※	S2	S1		※	M6	M8				I	14	✓	✓			0.5	A
			0	20	1.2	0.7	20201			※		B2	B5	※	S2	S1		※		M8				I	14	✓	✓			0.5	A
3/8"	3G	3R	0	4	3	4	20201			※		B2	B5	※	S2	S1		※	M6	M8				I	14	✓	✓			0.5	B
1/2"	4G	4R	0	4	3	4	20201			※		B2	B5	※	S2	S1		※	M6	M8				I	14	✓	✓			0.5	B
			0	6	2.5	3.5	20201			※		B2	B5	※	S2	S1		※	M6	M8				I	14	✓	✓			0.5	B
			0	8	2.2	2.5	20201			※		B2	B5	※	S2	S1		※	M6	M8				I	14	✓	✓			0.5	B
			0	10	1.8	1.8	20201			※		B2	B5	※	S2	S1		※	M6	M8				I	14	✓	✓			0.5	B
			0.5	10	12	60	24201			※			B12		S2	S1	※	※	M6	M8				I	14	✓	✓			0.5	865
			0.7	10	12	60	21201			※		B2	B12	※	S2	S1		M0	※	M8				I	14		✓			0.5	989
			0	12	12	60	23204		2-10	※				※	S2	S1		M0	※	M8				I	14	✓	✓			0.5	857
			0	20	1.2	0.7	20201			※		B2	B5	※	S2	S1		※						I	14	✓	✓			0.5	B
			1	20	12	60	24202			※			B12		S2	S1	※	※	M6	M8				I	14	✓	✓			0.5	865
			1	20	12	60	21202			※		B2	B12	※	S2	S1		M0	※	M8				I	14		✓			0.5	989
			0	20	12	60	23203		2-20	※				※	S2	S1		M0	※	M8				I	14	✓	✓			0.5	881
3/4"	6G	6R																													
			0.5	10	20	110	24201			※			B12		S2	S1	※	※	M6	M8				I	14	✓	✓			0.5	866
			0.7	10	20	110	21201			※		B2	B12	※	S2	S1		M0	※	M8				I	14		✓			0.5	990
			0	12	20	110	23204		2-10	※				※	S2	S1		M0	※	M8				I	14	✓	✓			0.5	888
			1	20	20	110	24202			※			B12		S2	S1	※	※	M6	M8				I	14	✓	✓			0.5	886
			1	20	20	110	21202			※		B2	B12	※	S2	S1		M0	※	M8				I	14		✓			0.5	990
			0	20	20	110	23203		2-20	※				※	S2	S1		M0	※	M8				I	14	✓	✓			0.5	882
1"	8G	8R																													
			0.5	10	25	185	24201V01			※			B12		S2	S1	※	※	M6	M8				I	14	✓	✓			0.5	869
			0.7	10	25	185	21201V01			※		B2	B12	※	S2	S1		M0	※	M8				I	14		✓			0.5	991
			0	12	25	185	23204		2-10	※				※	S2	S1		M0	※	M8				I	14	✓	✓			0.5	889
			1	20	25	185	24202V01			※			B12		S2	S1	※	※	M6	M8				I	14	✓	✓			0.5	869
			1	20	25	185	21202V01			※		B2	B12	※	S2	S1		M0		M8				I	14		✓			0.5	991
			0	20	25	185	23203		2-20	※				※	S2	S1		M0		M8				I	14	✓	✓			0.5	883
11/4"	10G	10R																													
			0.5	10	40	400	24201						B12		S2	S1	※	※	M6	M8				I	14	✓	✓			0.5	870
			0.7	10	40	400	21201			※		B2	B12	※	S2	S1		M0	※	M8				I	14		✓			0.5	992
			0	12	40	400	23204		2-10	※				※	S2	S1		M0	※	M8				I	14	✓	✓			0.5	890
			1	20	40	400	24202						B12		S2	S1	※	※	M6	M8				I	14	✓	✓			0.5	870
			1	20	40	400	21202			※		B2	B12	※	S2	S1		M0	※	M8				I	14		✓			0.5	992
			0	20	40	400	23203		2-20	※				※	S2	S1		M0	※	M8				I	14	✓	✓			0.5	885
11/2"	12G	12R																													
			0.5	10	40	440	24201						B12		S2	S1	※	※	M6	M8				I	14	✓	✓			0.5	871
			0.7	10	40	440	21201			※		B2	B12	※	S2	S1		M0	※	M8				I	14		✓			0.5	993
			0	12	40	440	23204		2-10	※				※	S2	S1		M0	※	M8				I	14	✓	✓			0.5	891
			1	20	40	440	24202						B12		S2	S1	※	※	M6	M8				I	14	✓	✓			0.5	871
			1	20	40	440	21202			※		B2	B12	※	S2	S1		M0	※	M8				I	14		✓			0.5	993
			0	20	40	440	23203		2-20	※				※	S2	S1		M0	※	M8				I	14	✓	✓			0.5	885

Cable Entry	Ex ia	
M20 x 1.5	66MS	67MS
M25 x 1.5	66	67
1/2" NPT	66NS	67NS

※ = Do not specify when opted for. Refer Page # 22 for Value of ※
✓= Options available
* Valve type printed in red colour is external pilot air/ air operated valve

Code	Construction Reference
A	981, 855
B	854, 856

Specifications are subject to change without notice

ROTEX
Engineering For The Future

2/2 NORMALLY OPEN, INTRINSICALLY SAFE SOLENOID VALVE

SPECIFICATION

PORT CONNECTION			PRE-SSURE bar		ORIFICE (mm)	FLOW FACTOR kv (LPM OF WATER @ 1 bar ΔP)	VALVE TYPE	PILOT PRESSURE	BODY MATERIAL AND INTERNALS				SEALS				MANUAL OVERRIDE			SOLENOID ENCLOSURE					SUFFIX		POWER VA			CONSTRUCTION REFERENCE NUMBER
																				EXPLOSION PROOF Ex ia IIC,T6,IP67										
SIZE	BSP(F)	NPT(F)	MINIMUM	MAXIMUM					ALUMINIUM	ALUMINIUM + SS	BRASS (STD. PORT NPT)	SS 316/ CF8 (STD. PORT NPT)	NBR	Viton	EPDM	HYTREL	NIL	STAYPUT CUM MOMENTARY	MOMENTARY	LOW POWER IS PLUG IN	LOW POWER IS TERMINAL BOX	Low Power IS FPJB Ex d	IS Coil With Circuit Ex ia (d)IIC, T6, IP67	SOLENOID SIZE	OXYGEN	AMONIA	AC INRUSH	AC HOLDING	DC	
2/2 NORMALLY OPEN																														
2"	16G	16R	0.5	10	50	650	24201V01					B12	※	S2	S1		※	M6	M8				I	14	✓	✓			0.5	872
			0.7	10	50	650	21201V01		※		B2	B12		S2	S1		M0	※	M8				I	14		✓			0.5	994
			0	12	50	650	23204	2-10	※				※	S2	S1	※	M0	※	M8				I	14	✓	✓			0.5	892
			1	20	50	650	24202V01					B12	※	S2	S1		※	M6	M8				I	14	✓	✓			0.5	872
			1	20	50	650	21202V01		※		B2	B12		S2	S1		M0	※	M8				I	14		✓			0.5	994
			0	20	50	650	23203	2-20	※					S2	S1		M0	※	M8				I	14	✓	✓			0.5	886
21/2"	20G	20R	0.7	10	65	800	24201					B12		S2		※	※	M6	M8				I	14	✓	✓			0.5	886
			1	20	65	800	24202					B12		S2		※	※	M6	M8				I	14	✓	✓			0.5	886
3"	24G	24R	0.7	10	80	1000	24201					B12		S2		※	※	M6	M8				I	14	✓	✓			0.5	886
			1	20	80	1000	24202					B12		S2		※	※	M6	M8				I	14	✓	✓			0.5	886

Cable Entry	Ex ia
M20 x 1.5	66MS 67MS
M25 x 1.5	66 67
1/2" NPT	66NS 67NS

※ = Do not specify when opted for. Refer Page # 22 for Value of ※
✓= Options available
* Valve type printed in red colour is external pilot air/ air operated valve

Specifications are subject to change without notice

3/2 NORMALLY CLOSED, INTRINSICALLY SAFE SOLENOID VALVE

SPECIFICATION

PORT CONNECTION			PRE-SSURE bar						BODY MATERIAL AND INTERNALS				SEALS				MANUAL OVERRIDE			SOLENOID ENCLOSURE EXPLOSION PROOF Ex ia IIC,T6,IP67					SUFFIX		POWER VA			CONSTRUCTION REFERENCE NUMBER
SIZE	BSP(F)	NPT(F)	MINIMUM	MAXIMUM	ORIFICE (mm)	FLOW FACTOR kv (LPM OF WATER @ 1 bar ΔP)	VALVE TYPE	PILOT PRESSURE	ALUMINIUM	ALUMINIUM + SS	BRASS (STD. PORT NPT) SS 316 (STD. PORT NPT)		NBR	Viton	EPDM	F. Silicon	NIL	STAYPUT CUM MOMENTARY	MOMENTARY	LOW POWER IS PLUG IN	LOW POWER IS TERMINAL BOX	Low Power IS FPJB Ex d	IS Coil With Circuit Ex ia (d)IIC, T6, IP67	SOLENOID SIZE	OXYGEN	AMONIA	AC INRUSH	AC HOLDING	DC	
3/2 NORMALLY CLOSED																														
1/8”	1G	1R	0	3	1.2	0.7	I3001		※		B2	B5	※	S2			M0	※	M8	65CR	T	E		13	✓	✓			0.4	902
			0	4	3	4	30125		※		B2	B5	※	S2	S1		※	M6	M8				I	14	✓	✓			0.5	A
			0	8	0.8	0.5	I3001		※		B2	B5	※	S2			M0	※	M8	65CR	T	E		13	✓	✓			0.4	902
			0	10	1.8	1.8	30125		※		B2	B5	※	S2	S1		※	M6	M8				I	14	✓	✓			0.5	A
1/4”	2G	2R	0	3	1.2	0.7	I3001		※		B2	B5	※	S2			M0	※	M8	65CR	T	E		13	✓	✓			0.4	902
			0	4	3	4	30125		※		B2	B5	※	S2	S1		※	M6	M8				I	14	✓	✓			0.5	A
			0	6	2.5	3.5	30125		※		B2	B5	※	S2	S1		※	M6	M8				I	14	✓	✓			0.5	A
			0	8	2.2	2.5	30125		※		B2	B5	※	S2	S1		※	M6	M8				I	14	✓	✓			0.5	A
			0	8	0.8	0.5	I3001		※		B2	B5	※	S2			M0	※	M8	65CR	T	E		13	✓	✓			0.4	902
			0	15	1.6	1.4	30125		※		B2	B5	※	S2	S1		※	M6	M8				I	14	✓	✓			0.5	A
			0	20	1.2	0.7	30125		※		B2	B5	※	S2	S1		※	M6	M8				I	14	✓	✓			0.5	A
			2	20	7	18	31120		※	B1	B2	B5	※	S2	S1		M0	※	M8				I	14		✓			0.5	925
3/8”	3G	3R	0	4	3	4	30125		※		B2	B5	※	S2	S1		※	M6	M8				I	14	✓	✓			0.5	B
			0	10	1.8	1.8	30125		※		B2	B5	※	S2	S1		※	M6	M8				I	14	✓	✓			0.5	B
1/2”	4G	4R	0	4	3	4	30125		※		B2	B5	※	S2	S1		※	M6	M8				I	14	✓	✓			0.5	B
			0	6	2.5	3.5	30125		※		B2	B5	※	S2	S1		※	M6	M8				I	14	✓	✓			0.5	B
			0	8	2.2	2.5	30125		※		B2	B5	※	S2	S1		※	M6	M8				I	14	✓	✓			0.5	B
			0	15	1.6	1.4	30125		※		B2	B5	※	S2	S1		※	M6	M8				I	14	✓	✓			0.5	B
			0	20	1.2	0.7	30125		※		B2	B5	※	S2	S1		※	M6	M8				I	14	✓	✓			0.5	B

Cable Entry	Ex ia
M20 x 1.5	66MS 67MS
M25 x 1.5	66 67
1/2” NPT	66NS 67NS

※ = Do not specify when opted for. Refer Page # 22 for Value of ※
✓= Options available

Code	Construction Reference
A	904, 906
B	905, 907

ROTEX
Engineering For The Future

3/2 NORMALLY OPEN, INTRINSICALLY SAFE SOLENOID VALVE

SPECIFICATION

PORT CONNECTION			PRE-SSURE bar		ORIFICE (mm)	FLOW FACTOR kv (LPM OF WATER @ 1 bar ΔP)	VALVE TYPE	PILOT PRESSURE	BODY MATERIAL AND INTERNALS				SEALS				MANUAL OVERRIDE			SOLENOID ENCLOSURE EXPLOSION PROOF Ex ia IIC,T6,IP67					SUFFIX		POWER VA			CONSTRUCTION REFERENCE NUMBER
SIZE	BSP(F)	NPT(F)	MINIMUM	MAXIMUM					ALUMINIUM	ALUMINIUM + SS	BRASS (STD. PORT NPT) SS 316 (STD. PORT NPT)		NBR	Viton	EPDM	F. Silicon	NIL	STAYPUT CUM MOMENTARY	MOMENTARY	LOW POWER IS PLUG IN	LOW POWER IS TERMINAL BOX	Low Power IS FPJB Ex d	IS Coil With Circuit Ex ia (d)IIC, T6, IP67	SOLENOID SIZE	OXYGEN	AMONIA	AC INRUSH	AC HOLDING	DC	
3/2 NORMALLY OPEN																														
1/8”	1G	1R	0	4	3	4	30201		※		B2	B5	※	S2	S1		※	M6	M8				I	14	✓	✓			0.5	A
			0	10	1.8	1.8	30201		※		B2	B5	※	S2	S1		※	M6	M8				I	14	✓	✓			0.5	A
1/4”	2G	2R	0	4	3	4	30201		※		B2	B5	※	S2	S1		※	M6	M8				I	14	✓	✓			0.5	A
			0	6	2.5	3.5	30201		※		B2	B5	※	S2	S1		※	M6	M8				I	14	✓	✓			0.5	A
			0	8	2.2	2.5	30201		※		B2	B5	※	S2	S1		※	M6	M8				I	14	✓	✓			0.5	A
			0	15	1.6	1.4	30201		※		B2	B5	※	S2	S1		※	M6	M8				I	14	✓	✓			0.5	A
			0	20	1.2	0.7	30201		※		B2	B5	※	S2	S1		※	M6	M8				I	14	✓	✓			0.5	A
3/8”	3G	3R	0	4	3	4	30201		※		B2	B5	※	S2	S1		※	M6	M8				I	14	✓	✓			0.5	B
			0	10	1.8	1.8	30201		※		B2	B5	※	S2	S1		※	M6	M8				I	14	✓	✓			0.5	B
1/2”	4G	4R	0	4	3	4	30201		※		B2	B5	※	S2	S1		※	M6	M8				I	14	✓	✓			0.5	B
			0	6	2.5	3.5	30201		※		B2	B5	※	S2	S1		※	M6	M8				I	14	✓	✓			0.5	B
			0	8	2.2	2.5	30201		※		B2	B5	※	S2	S1		※	M6	M8				I	14	✓	✓			0.5	B
			0	15	1.6	1.4	30201		※		B2	B5	※	S2	S1		※	M6	M8				I	14	✓	✓			0.5	B
			0	20	1.2	0.7	30201		※		B2	B5	※	S2	S1		※	M6	M8				I	14	✓	✓			0.5	B

Cable Entry	Ex ia
M20 x 1.5	66MS 67MS
M25 x 1.5	66 67
1/2” NPT	66NS 67NS

※ = Do not specify when opted for. Refer Page # 22 for Value of ※
✓= Options available

Code	Construction Reference
A	908, 910
B	909, 911

Specifications are subject to change without notice

3/2 UNIVERSAL, INTRINSICALLY SAFE SOLENOID VALVE

SPECIFICATION

PORT CONNECTION			PRE-SSURE bar		ORIFICE (mm)	FLOW FACTOR kv (LPM OF WATER @ 1 bar ΔP)	VALVE TYPE	PILOT PRESSURE	BODY MATERIAL AND INTERNALS				SEALS				MANUAL OVERRIDE			SOLENOID ENCLOSURE EXPLOSION PROOF Ex ia IIC,T6,IP67					SUFFIX		POWER VA			CONSTRUCTION REFERENCE NUMBER
SIZE	BSP(F)	NPT(F)	MINIMUM	MAXIMUM					ALUMINIUM	ALUMINIUM + SS	BRASS (STD. PORT NPT) SS 316 (STD. PORT NPT)		NBR	Viton	EPDM	F. Silicon	NIL	STAYPUT CUM MOMENTARY	MOMENTARY	LOW POWER IS PLUG IN	LOW POWER IS TERMINAL BOX	Low Power IS FPJB Ex d	IS Coil With Circuit Ex ia (d)IIC, T6, IP67	SOLENOID SIZE	OXYGEN	AMONIA	AC INRUSH	AC HOLDING	DC	
3/2 UNIVERSAL																														
1/8"	1G	1R	0	1.5	3	4	30301		※		B2	B5	※	S2	S1		※	M6	M8				I	14	✓	✓			0.5	A
1/8"	1G	1R	0	8	1.8	1.8	30301		※		B2	B5	※	S2	S1		※	M6	M8				I	14	✓	✓			0.5	A
1/4"	2G	2R	0	1.5	3	4	30301		※		B2	B5	※	S2	S1		※	M6	M8				I	14	✓	✓			0.5	A
			0	4	2.5	3.5	30301		※		B2	B5	※	S2	S1		※	M6	M8				I	14	✓	✓			0.5	A
			0	5	2.2	2.5	30301		※		B2	B5	※	S2	S1		※	M6	M8				I	14	✓	✓			0.5	A
			0	10	1.6	1.8	30301		※		B2	B5	※	S2	S1		※	M6	M8				I	14	✓	✓			0.5	A
			0	14	1.2	0.7	30301		※		B2	B5	※	S2	S1		※	M6	M8				I	14	✓	✓			0.5	A
3/8"	3G	3R	0	1.5	3	4	30301		※		B2	B5	※	S2	S1		※	M6	M8				I	14	✓	✓			0.5	A
			0	8	1.8	1.8	30301		※		B2	B5	※	S2	S1		※	M6	M8				I	14	✓	✓			0.5	A
1/2"	4G	4R	0	1.5	3	4	30301		※		B2	B5	※	S2	S1		※	M6	M8				I	14	✓	✓			0.5	B
			0	4	2.5	3.5	30301		※		B2	B5	※	S2	S1		※	M6	M8				I	14	✓	✓			0.5	B
			0	5	2.2	2.5	30301		※		B2	B5	※	S2	S1		※	M6	M8				I	14	✓	✓			0.5	B
			0	10	1.6	1.8	30301		※		B2	B5	※	S2	S1		※	M6	M8				I	14	✓	✓			0.5	B
			0	14	1.2	0.7	30301		※		B2	B5	※	S2	S1		※	M6	M8				I	14	✓	✓			0.5	B
3/2 EXTERNAL UNIVERSAL																														
1/4"	2G	2R	0.7	10.5	7	18	32347IS	2-10.5	※			B5	※	S2	S1		M0	※	M8	65CR	T	E		13		✓			0.4	

Cable Entry	Ex ia	
M20 x 1.5	66MS	67MS
M25 x 1.5	66	67
1/2" NPT	66NS	67NS

※ = Do not specify when opted for. Refer Page # 22 for Value of ※
✓= Options available
* Valve type printed in red colour is external pilot air/ air operated valve

Code	Construction Reference
A	908, 910
B	909, 910

ROTEX
Engineering For The Future

5/2 INTRINSICALLY SAFE, SINGLE SOLENOID VALVE

SPECIFICATION

PORT CONNECTION			PRE-SSURE bar		ORIFICE (mm)	FLOW FACTOR kv (LPM OF WATER @ 1 bar ΔP)	VALVE TYPE	PILOT PRESSURE	BODY MATERIAL AND INTERNALS				SEALS				MANUAL OVERRIDE			SOLENOID ENCLOSURE EXPLOSION PROOF Ex ia IIC,T6,IP67					SUFFIX		POWER VA			CONSTRUCTION REFERENCE NUMBER
SIZE	BSP(F)	NPT(F)	MINIMUM	MAXIMUM					ALUMINIUM	ALUMINIUM + SS	BRASS (STD. PORT NPT) SS 316 (STD. PORT NPT)		NBR	Viton	Viton GLT	F. Silicon	NIL	STAYPUT CUM MOMENTARY	MOMENTARY	LOW POWER IS PLUG IN	LOW POWER IS TERMINAL BOX	Low Power IS FPJB Ex d	IS Coil With Circuit Ex ia (d)IIC, T6, IP67	SOLENOID SIZE	OXYGEN	AMONIA	AC INRUSH	AC HOLDING	DC	
5/2 MONO																														
1/4”	2G	2R	2	11	6	12	I5001		※	B1	B2	B5	※	S2			M0	※	M8	65CR	T	E		13	✓	✓			0.4	945
			2	20	6	12	51401		※	B1	B2	B5	※	S2			M0	※	M8					14		✓			0.5	960
3/8”	3G	3R	2	10	6	12	51400		※	B1	B2	B5	※	S2			M0	※	M8				I	14	✓	✓			0.5	946
			2	10	10	38	51432		※	B1	B2	B5	※	S2		S19	M0	※	M8				I	14		✓			0.5	956
			2	20	6	12	51401		※	B1	B2	B5	※	S2			M0	※	M8				I	14		✓			0.5	937
			2	20	10	38	51433		※	B1	B2	B5	※	S2		S19	M0	※	M8				I	14		✓			0.5	956
1/2”	4G	4R	2	11	6	12	I5001		※	B1	B2	B5	※	S2			M0	※	M8	65CR	T	E		13		✓			0.4	946
			2	10	6	12	51400		※	B1	B2	B5	※	S2			M0	※	M8				I	14	✓	✓			0.5	937
			3	10	16	75	51432		※	B1	B2	B5	※	S2		S19	M0	※	M8				I	14		✓			0.5	957
			2	20	6	12	51401		※	B1	B2	B5	※	S2			M0	※	M8				I	14		✓			0.5	937
			3	20	16	75	51433		※	B1	B2	B5	※	S2		S19	M0	※	M8				I	14		✓			0.5	957
3/4”	6G	6R	3	10	20	110	51432		※	B1		B5	※	S2		S19	M0	※	M8				I	14		✓			0.5	958
			4	20	20	110	51433		※	B1		B5	※	S2		S19	M0	※	M8				I	14		✓			0.5	958
1”	8G	8R	3	10	25	185	51432		※	B1		B5	※	S2		S19	M0	※	M8				I	14		✓			0.5	959
			4	20	25	185	51433		※	B1		B5	※	S2		S19	M0	※	M8				I	14		✓			0.5	959

Cable Entry	Ex ia	
M20 x 1.5	66MS	67MS
M25 x 1.5	66	67
1/2” NPT	66NS	67NS

※ = Do not specify when opted for. Refer Page # 22 for Value of ※
✓= Options available

10

Specifications are subject to change without notice

5

5/2 INTRINSICALLY SAFE, DUAL SOLENOID VALVE

SPECIFICATION

PORT CONNECTION			PRE-SSURE bar		ORIFICE (mm)	FLOW FACTOR kv (LPM OF WATER @ 1 bar ΔP)	VALVE TYPE	PILOT PRESSURE	BODY MATERIAL AND INTERNALS				SEALS				MANUAL OVERRIDE			SOLENOID ENCLOSURE EXPLOSION PROOF Ex ia IIC,T6,IP67					SUFFIX		POWER VA			CONSTRUCTION REFERENCE NUMBER
SIZE	BSP(F)	NPT(F)	MINIMUM	MAXIMUM					ALUMINIUM	ALUMINIUM + SS	BRASS (STD. PORT NPT) SS 316 (STD. PORT NPT)		NBR	Viton	Viton GLT	F SILICON	NIL	STAYPUT CUM MOMENTARY	MOMENTARY	LOW POWER IS PLUG IN	LOW POWER IS TERMINAL BOX	Low Power IS FPJB Ex d	IS Coil With Circuit Ex ia (d)IIC, T6, IP67	SOLENOID SIZE	OXYGEN	AMONIA	AC INRUSH	AC HOLDING	DC	
5/2 BI-DIRECTIONAL																														
1/4”	2G	2R	2	8	6	12	I5002		※	B1	B2	B5	※	S2			M0		※	65CR	T	E		13		✓			0.4	978
3/8”	3G	3R	2	10	10	38	57404		※	B1	B2	B5	※	S2		S19	M0		※				I	14		✓			0.5	971
			2	20	10	38	57405		※	B1	B2	B5	※	S2		S19	M0		※				I	14		✓			0.5	971
1/2”	4G	4R	2	8	6	12	I5002		※	B1	B2	B5	※	S2			M0		※	65CR	T	E		13		✓			0.4	967
			3	10	16	75	57404		※	B1	B2	B5	※	S2		S19	M0		※				I	14		✓			0.5	979
			3	20	16	75	57405		※	B1	B2	B5	※	S2		S19	M0		※				I	14		✓			0.5	933
3/4”	6G	6R	3	10	20	110	57404		※	B1		B5	※	S2		S19	M0		※				I	14		✓			0.5	934
			4	20	20	110	57405		※	B1		B5	※	S2		S19	M0		※				I	14		✓			0.5	934
1”	8G	8R	3	10	25	185	57404		※	B1		B5	※	S2		S19	M0		※				I	14		✓			0.5	31
			4	20	25	185	57405		※	B1		B5	※	S2		S19	M0		※				I	14		✓			0.5	932

Cable Entry	Ex ia	
M20 x 1.5	66MS	67MS
M25 x 1.5	66	67
1/2” NPT	66NS	67NS

※ = Do not specify when opted for. Refer Page # 22 for Value of ※
✓= Options available

MANUAL RESET SOLENOID VALVE

Manual Reset Solenoid Valves are used in applications and processes demanding utmost safety checks before starting / stopping the process.

In all such application, human intervention is the final check before the process is taken into/ taken off the auto mode.

Based on the nature of the process, the solenoid valves are required to stop the process from starting automatically in case of an emergency or vice versa. These valves are called Manual Reset valves with Latching on Energization. They are also referred to as No voltage Release or Free handle type Manual reset.

ROTEX offers this series of valves in three constructions:

Manual Reset, Latching ON Energization (MR) (NO VOLTAGE RELEASE)
Manual Reset, where in the Manual Reset button is used to compliment the power supply provided to the solenoid. On pressing the Manual Reset button, the plunger is lifted and latched electrically. The Valve trips when the power to the solenoid valve is removed.
With this feature, ROTEX offers a comprehensive range of Manual Reset solenoid valves in 2 Port, 3 Port and 5 Port constructions.
For more details on individual valve specifications, Refer to pages 229 to 238

Manual Reset Tamper Proof (TPMR)
Where in the valve cannot be operated till either by pressing manual reset button or by providing electrical supply. The valve changes position only when the electrical supply is provided and Manual Reset button pressed momentarily. On de energizing the solenoid, the valve trips.
This feature is currently available in 3 port valve only.
For more details on individual valve specifications, Refer to pages 233 to 235

ROTEX also offers a complete range of NAMUR Solenoid valves with Manual Reset, Contact ROTEX for more details.

Manual Reset, Latching on De-energization (ML)
In certain application, the valves are energized on automatically, however they are required to remain energized till manually turned off. These valves are called Manual Reset with Latching on De-energization of the Solenoid. They are also referred to as **Trip shut off** type Manual Reset Valves. Solenoid Valves used in Fire Fighting systems are typical example of application of this type.

Manual Operated Electrically Reset (ME) (Electrically Tripped)
Soelnoid Valve while de energised, valve can be actuated by pushing button. The Valve shall remain actuated.
To reset valve coil is energised.

For more details on individual valve specifications, Refer to pages 239 to 242

Specifications are subject to change without notice

MANUAL RESET SOLENOID VALVE

WORKING PRINCIPLE



FEATURES

- Wide range of 2,3 and 5 ports valves Available
- Without power to the solenoid, pressing of Manual Override actuates the valve releasing Manual Override reset the valve
- Providing power supply to the solenoids the valve does not actuate till set by pressing Manual Override. The valve reset when power to the solenoid is cutoff
- Refer to page 233 to 235 for tamper proof valve

AMBIENT AND FLUID TEMPERATURE

-20 °C to 80 °C

MEDIA

Air, Inert Gases

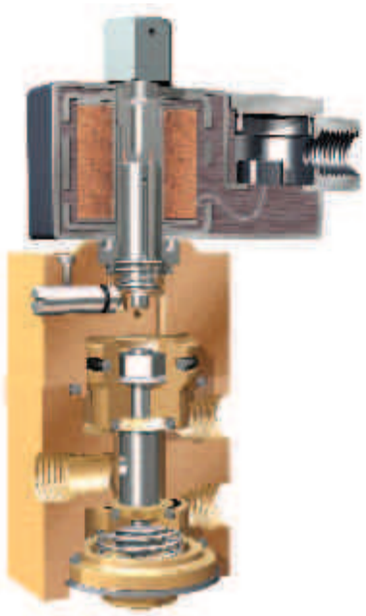

APPLICATION

Manual Reset ON (Latching on energization) valve is to be used for application which demands utmost safety check before starting of the process.
Valve cannot be operated electrically. The valve switches ON when electrical supply to the solenoid is available followed by manual operation.
In absence of power to the solenoid, the valve can be operated manually.
Valve is switched OFF when power to the solenoid is removed.
Some of the examples where Manual reset ON valve should be used, are starting of Fuel gas flow, switching on solenoid valve for starting main process, etc.

MANUAL RESET ON SOLENOID VALVE

SERIES : 32D



3/2 Direct Acting High Orifice Valve
Type: M3006: 5 mm.
M3007: 7, 10 mm.

SERIES : 32P



3/2 NC/NO Pilot Operated Valve
Type: M3008 NC

SERIES : 32P



3/2 Universal Pilot Operated Valve
Type: M3009 : External air

ERIES : 52S



5/2 Single Solenoid Valve
Type: M5004

Contact Rotex for
- Any other ambient, fluid temperature, media and application
- UL listed, c(UL) Listed general purpose Valve

- Select solenoid with special version MR
- Add Suffix SL for Ordering SIL capable Certified valve.

Specifications are subject to change without notice

MANUAL RESET ON SOLENOID VALVE

SPECIFICATION

PORT CONNECTION			PRE-SSURE bar		ORIFICE (mm)	FLOW FACTOR kv (LPM OF WATER @ 1 bar ΔP)	VALVE TYPE	PILOT PRESSURE	BODY MATERIAL AND INTERNALS				SEALS					MANUAL OVERRIDE			SOLENOID ENCLOSURE						SUFFIX		POWER VA			CONSTRUCTION REFERENCE NUMBER
																					WEATHER PROOF				EXPLOSION PROOF									
SIZE	BSP(F)	NPT(F)	MINIMUM	MAXIMUM					ALUMINIUM	ALUMINIUM + SS	BRASS (STD. PORT NPT)	SS 316 (STD. PORT NPT)	NBR	Viton	EPDM	HYTREL	F. Silicon	NIL	STAYPUT CUM MOMENTARY	MOMENTARY	FLYING LEAD	PLUG IN, IP67	SQ. PLUG IN, IP67	TERMINAL BOX IP67	EXPLOSION PROOF IIC, IP67	IS WITH CIRCUIT Exia IIC T6, IP67	SOLENOID SIZE	OXYGEN	AMMONIA	AC INRUSH	AC HOLDING	DC	

3/2 NORMALLY CLOSED

1/4"	2G	2R	2	10	7	18	M3008		※	B1	B2	B5	※	S2			S19			※				T	E		14		✓	2	2	2	343
3/8"	3G	3R	2	10	10	38	M3008		※	B1	B2	B5	※	S2			S19			※				T	E		14		✓	2	2	2	915
1/2"	4G	4R	2	10	10	38	M3008		※	B1	B2	B5	※	S2			S19			※				T	E		14		✓	2	2	2	917
			2	10	16	75	M3008		※	B1	B2	B5	※	S2			S19			※				T	E		14		✓	2	2	2	916

Cable Entry	T	E																		
		Ex d				Ex a			Ex emb											
M20 x 1.5	19	39	87	M	S	66	M	S	58	M	S	58	L	T	M	S				
M25 x 1.5			87			66			58			58	L	T						
1/2" NPT	16	37	87	N	S	66	N	S	58	N	S	58	L	T	N	S				

※ = Do not specify when opted for. Refer Page # 22 for Value of ※
✓= Options available

Specifications are subject to change without notice

ROTEX
Engineering For The Future

MANUAL RESET ON SOLENOID VALVE

SPECIFICATION

PORT CONNECTION			PRE-SSURE bar						BODY MATERIAL AND INTERNALS				SEALS					MANUAL OVERRIDE			SOLENOID ENCLOSURE							SUFFIX		POWER VA			
																					WEATHER PROOF				EXPLOSION PROOF								
SIZE	BSP(F)	NPT(F)	MINIMUM	MAXIMUM	ORIFICE (mm)	FLOW FACTOR kv (LPM OF WATER @ 1 bar ΔP)	VALVE TYPE	PILOT PRESSURE	ALUMINIUM	ALUMINIUM + SS	BRASS (STD. PORT NPT)	SS 316 (STD. PORT NPT)	NBR	Viton	EPDM	Viton GLT	F. Silicon	NIL	STAYPUT CUM MOMENTARY	MOMENTARY	FLYING LEAD	PLUG IN, IP67	SQ. PLUG IN, IP67	TERMINAL BOX IP67	EXPLOSION PROOF IIC, IP67	IS WITH CIRCUIT Exia IIC T6, IP67	SOLENOID SIZE	OXYGEN	AMMONIA	AC INRUSH	AC HOLDING	DC	CONSTRUCTION REFERENCE NUMBER
3/2 NORMALLY OPEN																																	
3/2 UNIVERSAL																																	
1/4"	2G	2R																															
			0	10	7	18	M3009	2-10	※	B1	B2	B5	※	S2						※				T	E		14	✓	✓	2	2	2	902
3/8"	3G	3R																															
			0	10	10	30	M3007		※		B2	B5	※	S2G			S19			※				T	E		18		✓	5	5	5	930
			0	10	10	38	M3009	2-10	※	B1		B5	※	S2			S19			※				T	E		14	✓	✓	2	2	2	915
			0	10	10	38	M3009V	2-10	※		B17		※	S2			S19			※				T	E		14	✓		2	2	2	915
1/2"	4G	4R																															
			0	10	10	30	M3007		※		B2	B5	※	S2G			S19			※				T	E		18		✓	5	5	5	930
			0	10	10	38	M3009	2-10	※	B1		B5	※	S2			S19			※				T	E		14	✓	✓	2	2	2	916
			0	10	16	75	M3009	2-10	※	B1	B2	B5	※	S2			S19			※				T	E		14	✓	✓	2	2	2	930
5/2 MONO																																	
1/4"	2G	2R	2	10	6	12	M5004		※		B2	B5	※	S2			S19			※				T	E				✓	2	2	2	972
1/2"	4G	4R	2	10	12	50	M5004		※		B2	B5	※	S2			S19			※				T	E				✓	2	2	2	973
1"	8G	8R	2	10	25	110	M5004		※		B2	B5	※	S2			S19			※				T	E				✓	2	2	2	974

Cable Entry	T	E																															
		Ex d						Ex ia																									
M20 x 1.5	19	39	87	MS	66	MS	58	MS	58	LT	MS																						
M25 x 1.5			87		66		58		58	LT																							
1/2" NPT	16	37	87	NS	66	NS	58	NS	58	LT	NS																						

※ = Do not specify when opted for. Refer Page # 22 for Value of ※
✓ = Options available

Specifications are subject to change without notice

SERIES : 32D

3/2 UNIVERSAL, TAMPER PROOF, MANUAL RESET SOLENOID VALVE

TYPE	PRESSURE

TYPE	PRESSURE

TYPE	PRESSURE
M3015	0 - 10 bar

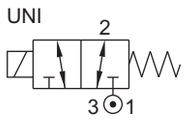

FEATURES

- Bubble tight shut off
- Mounts in any position
- Suitable for Vacuum up to 10^{-6} torr
- Vibration resistance up to 9g
- Suitable for high speed cycling
- Life >10 million cycles



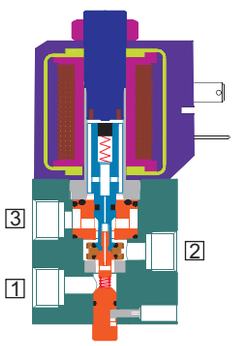

WETTED PARTS

Code			B2	B5
Body			Brass	SS 316
Internals			Brass and SS 316	SS 316
Guide Assembly	SS 304			
Shadow-Ring	None			
Plunger, Insert	SS 430			
Spring	SS 302			
Seat, Seals	NBR, Viton GLT, F. Silicon			
Fasteners	SS 304			

AMBIENT AND FLUID TEMPERATURE

-30 °C to 75 °C

SPECIAL VERSION AND SUFFIX

Suffix (valve) AM
Special version : (Solenoid) CO, FR, SS

MEDIA

Air, Inert Gases, Water, Vacuum, Free Flowing Liquids, Oil, Diesel, Kerosene, LPG

PORT CONNECTION

FUNCTION	INLET	OUTLET	EXHAUST
NC	1	2	3

SPARES

(Refer page 25 for ordering code)

SPARE KIT	CODE
Seal Kit : Oring Set and Plunger Assembly	98
Repair Kit : Oring Set, Plunger Assembly, Fastener, Springs, Manual Reset Lever, Guide Assembly, Piston Kit	99
Solenoid Kit : Solenoid, Gasket	34

APPROVAL

(* applied for)

Approval	TYPE 4X, 6P	IP67	Ex d IIC T4 or T5 or T6 IP66	Ex ia IIC T6 IP67	DGMS	CCOE
ISI		✓	✓		✓	✓
CE		✓	✓			
UL	✓		*			
CCPEL			✓			
EAC			✓			
IECEx			✓			

APPLICATION

Valve cannot be operated electrically or manually, Valve can only be operated when electrical supply to the solenoid is available and then operated manually.
Valve can be switched OFF when power to the solenoid is removed.

Contact Rotex for

- Any other ambient, fluid temperature, media and application
- UL listed, c(UL) Listed general purpose Valve

For Valve type M3015 operated with AC voltage, select Solenoid with inbuilt full rectifier 'FR' option
Add Suffix SL for Ordering SIL capable Certified valve.
OIL Media Temperature Restricted from 0 °C to 100 °C

Specifications are subject to change without notice

3/2 NC, TAMPER PROOF, MANUAL RESET SOLENOID VALVE

TYPE	PRESSURE
M3016	0 - 8 bar

UNI

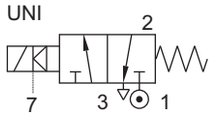

TYPE	PRESSURE
M3014	2 - 10 bar

NC

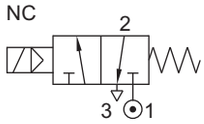

FEATURES

- Bubble tight shut off
- Mounts in any position
- Vibration resistance up to 9g
- Life >10 million cycles



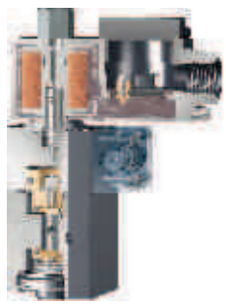

WETTED PARTS

Code			B2	B5
Body			Brass	SS 316
Internals			Brass and SS 316	SS 316
Guide Assembly	SS 304			
Shadow-Ring	Copper/ Silver/ None			
Plunger, Insert	SS 430			
Spring	SS 302			
Seat, Seals	NBR, Viton, F. Silicon			
Fasteners	SS 304			

SPARES

(Refer page 25 for ordering code)

SPARE KIT	CODE
Seal Kit : Oring Set and Plunger Assembly	98
Repair Kit : Oring Set, Plunger Assembly, Fastener, Springs, Manual Reset Lever, Guide Assembly, Piston Kit	99
Solenoid Kit : Solenoid, Gasket	34

AMBIENT AND FLUID TEMPERATURE

-30 °C to 75 °C

SPECIAL VERSION AND SUFFIX

Suffix (valve) AM
Special version : (Solenoid) CO, FR, SS

APPROVAL

(* applied for)

Approval	TYPE 4X, 6P	IP67	Ex d IIC T4 or T5 or T6 IP66	Ex ia IIC T6 IP67	DGMS	CCOE
ISI		✓	✓	✓	✓	✓
CE		✓	✓	✓		
UL	✓		*			
CCPEL			✓	✓		
EAC			✓	✓		
PESO			✓	✓		

MEDIA

Air, Inert Gases, Water

PORT CONNECTION

FUNCTION	INLET	OUTLET	EXHAUST	PILOT EXHAUST	PILOT INLET
NC	1	2	3	6	-
UNI	1 OR 3	2	3 OR 1	6	7

APPLICATION

Valve cannot be operated electrically or manually, Valve can only be operated when electrical supply to the solenoid is available and then operated manually.
Valve can be switched OFF when power to the solenoid is removed.

Contact Rotex for
- Any other ambient, fluid temperature, media and application

3/2 TAMPER PROOF, MANUAL RESET SOLENOID VALVE

SPECIFICATION

PORT CONNECTION			PRE-SSURE bar		ORIFICE (mm)	FLOW FACTOR kv (LPM OF WATER @ 1 bar ΔP)	VALVE TYPE	PILOT PRESSURE	BODY MATERIAL AND INTERNALS			SEALS					MANUAL OVERRIDE			SOLENOID ENCLOSURE						SUFFIX		POWER VA		
																				WEATHER PROOF			EXPLOSION PROOF							
SIZE	BSP(F)	NPT(F)	MINIMUM	MAXIMUM					ALUMINIUM	ALUMINIUM + SS	BRASS (STD. PORT NPT) SS 316 (STD. PORT NPT)	NBR	Viton	EPDM	Viton GLT	F.Silicon	NIL	STAYPUT CUM MOMENTARY	MOMENTARY	FLYING LEAD	PLUG IN, IP67	SQ. PLUG IN, IP67	TERMINAL BOX IP67	EXPLOSION PROOF IIC, IP67	LARGE ENCLOSURE	SOLENOID SIZE	OXYGEN	AMONIA	AC INRUSH	AC HOLDING	DC
3/2 NORMALLY CLOSED																														
1/4"	2G	2R	2	10	6	12	M3014				B2	B5		S2			S19						T	E		14			18	12	8
3/8"	3G	3R	2	10	10	38	M3014				B2	B5		S2			S19						T	E		14			18	12	8
1/2"	4G	4R	2	10	10	38	M3014				B2	B5		S2			S19						T	E		14			18	12	8
			2	10	16	75	M3014				B2	B5		S2			S19						T	E		14			18	12	8
3/2 UNIVERSAL																														
1/4"	2G	2R	0	10	5	8	M3015				B2	B5				S2G	S19						T	E		14			2	2	2
			0	8	7	18	M3016	2-8			B2	B5		S2			S19						T	E		14			18	12	8
1/2"	4G	4R	0	10	5	8	M3015				B2	B5				S2G	S19						T	E		14			2	2	2
			0	8	16	80	M3016	2-8			B2	B5		S2			S19						T	E		14			18	12	8

Cable Entry	T	E																
		Ex d				Ex a			Ex emb									
M20 x 1.5	19	39	87	M	S	66	M	S	58	M	S	58	LT	M	S			
M25 x 1.5			87			66			58			58	LT					
1/2" NPT	16	37	87	N	S	66	N	S	58	N	S	58	LT	N	S			

※ = Do not specify when opted for. Refer Page # 22 for Value of ※
✓= Options available

DIMENSIONS

All Dimensions are in mm

For Valve Type M3014 and M3016

Port 7 only for Valve Type M3016

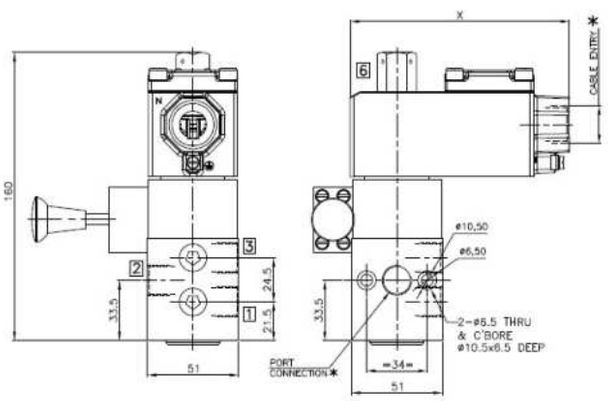

For Valve Type M3015

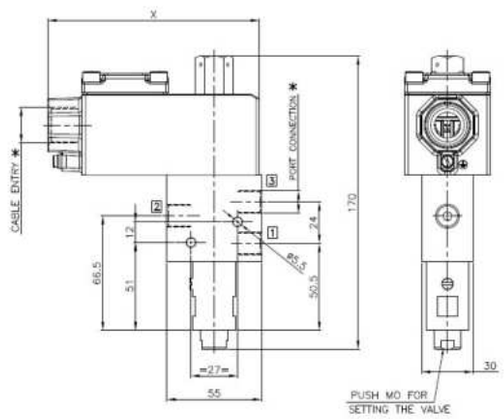

TERMINAL BOX/ Ex d LARGE ENCLOSURE, TYPE 16, 19, 37, 39, 58, 58LT, LC

K (PORT SIZE)	A	B	C	DP	DT	E	F	G	H	J	LP	LT	M	M	O	CONST. REF.
VALVE TYPE : M3014, M3016																
1/4"	51	51	160		97	26	34	34	34	M6		50	12	12	73	-
3/8"	61	61	172		97	31	34	36	36	M6		50	14	14	83	-
1/2"	81	81	194		97	41	50	48	48	M6		50	18	18	103	-

TERMINAL BOX/ Ex d LARGE ENCLOSURE, TYPE 16, 19, 37, 39, 58, 58LT, LC

K (PORT SIZE)	A	B	C	DP	DT	E	F	G	H	ØJ	K	LP	LT	M	N	CONST. REF.
VALVE TYPE : M3015																
1/4"	55	30	162		97	27	27	51	67	6	12		50	51	24	-

Specifications are subject to change without notice

MANUAL RESET ON VALVE WITH INTRINSICALLY SAFE SOLENOID



2/2 Direct Acting Manual Reset Valve
Type: M2001



3/2 Direct Acting Manual Reset Valve
Type: M3003

SERIES : 32P



3/2 Direct Acting Universal Manual
Reset Valve Type: M3004

SERIES : 32P



3/2 NC/NO Manual Reset Valve
Type: M3001 NC

SERIES : 32P



3/2 Universal Manual Reset Valve
Type: M3002V01 : External Pilot Uni

SERIES : 52S



5/2 Inline Poppet Manual Reset Valve
Type: M5003

Contact Rotex for
• Any other ambient, fluid temperature, media and application
• UL listed, c UL Listed general purpose Valve

Specifications are subject to change without notice

MANUAL RESET ON VALVE WITH INTRINSICALLY SAFE SOLENOID

SPECIFICATION

PORT CONNECTION			PRE-SSURE bar		ORIFICE (mm)	FLOW FACTOR kv (LPM OF WATER @ 1 bar ΔP)	VALVE TYPE	PILOT PRESSURE	BODY MATERIAL AND INTERNALS				SEALS				MANUAL OVERRIDE			SOLENOID ENCLOSURE EXPLOSION PROOF Ex ia IIC,T6,IP67					SUFFIX		POWER VA			CONSTRUCTION REFERENCE NUMBER
SIZE	BSP(F)	NPT(F)	MINIMUM	MAXIMUM					ALUMINIUM	ALUMINIUM + SS	BRASS (STD. PORT NPT) SS 316 (STD. PORT NPT)		NBR	Viton	Viton GLT	F. Silicon	NIL	STAYPUT CUM MOMENTARY	MOMENTARY	LOW POWER IS PLUG IN, IP67	LOW POWER IS TERMINAL BOX, IP67	Low Power IS FPJB Ex d	IS Coil With Circuit Ex ia (d)IIC, T6, IP67	SOLENOID SIZE	OXYGEN	AMONIA	AC INRUSH	AC HOLDING	DC	
2/2 NORMALLY CLOSED																														
1/8"	1G	1R	0	8	2.5	3.5	M2001		※		B2	B5	※	S2		S19			※	65CR	T	E		13	✓	✓			0.4	850
			0	8	1.8	1.8	M2001		※		B2	B5	※	S2		S19			※	65CR	T	E		13	✓	✓			0.4	850
1/4"	2G	2R	0	8	2.5	3.5	M2001		※		B2	B5	※	S2		S19			※	65CR	T	E		13	✓	✓			0.4	850
			0	8	1.8	1.8	M2001		※		B2	B5	※	S2		S19			※	65CR	T	E		13	✓	✓			0.4	850
3/2 NORMALLY CLOSED																														
1/4"	2G	2R	2	8	6	12	M3001		※	B1	B2	B2	※	S2		S19			※	65CR	T	E		13		✓			0.4	914
3/8"	3G	3R	2	8	10	38	M3001V01		※	B1	B2	B5	※	S2		S19			※	65CR	T	E		13		✓			0.4	915
1/2"	4G	4R	2	8	10	38	M3001V01		※	B1	B2	B5	※	S2		S19			※	65CR	T	E		13		✓			0.4	917
			2	8	16	75	M3001V01		※	B1	B2	B5	※	S2		S19			※	65CR	T	E		13		✓			0.4	916
3/2 NORMALLY OPEN																														
3/2 UNIVERSAL																														
1/4"	2G	2R	0	8	7	18	M3002V01	2-8	※	B1	B2	B5	※		S2G	S19			※	65CR	T	E		13		✓			0.4	914
3/8"	3G	3R	0	8	10	38	M3002V01	2-8	※	B1	B2	B5	※		S2G	S19			※	65CR	T	E		13		✓			0.4	915
1/2"	4G	4R	0	8	10	38	M3002V01	2-8	※	B1	B2	B5	※		S2G	S19			※	65CR	T	E		13		✓			0.4	917
			0	8	16	75	M3002V01	2-8	※	B1	B2	B5	※		S2G	S19			※	65CR	T	E		13		✓			0.4	916

Cable Entry	Ex ia
M20 x 1.5	67MS
1/2" NPT	67NS

※ = Do not specify when opted for. Refer Page # 22 for Value of ※
✓= Options available
* Valve type printed in red colour is external pilot air/ air operated valve

10

ROTEX
Engineering For The Future

MANUAL RESET ON VALVE WITH INTRINSICALLY SAFE SOLENOID

SPECIFICATION

PORT CONNECTION			PRE-SSURE bar		ORIFICE (mm)	FLOW FACTOR kv (LPM OF WATER @ 1 bar ΔP)	VALVE TYPE	PILOT PRESSURE	BODY MATERIAL AND INTERNALS				SEALS				MANUAL OVERRIDE			SOLENOID ENCLOSURE EXPLOSION PROOF Ex ia IIC,T6,IP67					SUFFIX		POWER VA			CONSTRUCTION REFERENCE NUMBER
SIZE	BSP(F)	NPT(F)	MINIMUM	MAXIMUM					ALUMINIUM	ALUMINIUM + SS	BRASS (STD. PORT NPT)	SS 316 (STD. PORT NPT)	NBR	Viton	EPDM	F. Silicon	NIL	STAYPUT CUM MOMENTARY	MOMENTARY	LOW POWER IS PLUG IN	LOW POWER IS TERMINAL BOX	Low Power IS FPJB Ex d	IS Coil With Circuit Ex ia (d)IIC, T6, IP67	SOLENOID SIZE	OXYGEN	AMONIA	AC INRUSH	AC HOLDING	DC	
							5/2 MONO																							
1/4"	2G	2R	2	8	6	12	M5003		※		B2	B5	※	S2		S19			※	65CR	T	E		13		✓			0.4	972
1/2"	4G	4R	2	8	12	50	M5003		※		B2	B5	※	S2		S19			※	65CR	T	E		13		✓			0.4	973
1"	8G	8R	2	8	25	185	M5003		※			B5	※	S2		S19			※	65CR	T	E		13		✓			0.4	974
			2	8	25	185	M5003				B17		※	S2		S19			※	65CR	T	E		13		✓			0.4	974

Cable Entry	Ex ia
M20 x 1.5	67MS
1/2" NPT	67NS

※ = Do not specify when opted for. Refer Page # 22 for Value of ※
✓= Options available

10

Specifications are subject to change without notice

MANUAL RESET OFF SOLENOID VALVE

WORKING PRINCIPLE



FEATURES

- Valve operated when solenoid is energized
- Valve retains the position when power to the solenoid is removed
- Most of the valves are reset by turning knob clockwise when power to the solenoid is switched off
- Wide varieties of 2 - 3 ports valve can be supplied
- Continuous duty rated solenoid
- Can be supplied with most voltage, current
- Can be supplied with weather proof/ Explosion proof solenoid enclosure

AMBIENT AND FLUID TEMPERATURE

-20 °C to 80 °C

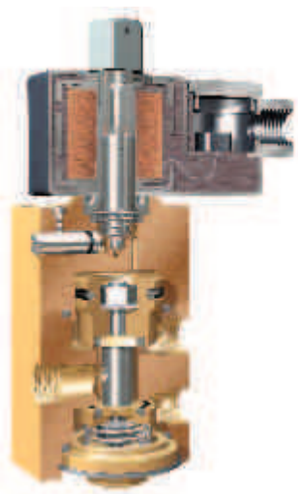

MEDIA

Air, Inert Gases, Water, Oil

APPLICATION

Manual Reset OFF valve (Latching on deenergization) switches ON when energized, Valve does not switch OFF when deenrgized till switched OFF manually. This type of valve is used where the valve is required to remain ON even though supply to the solenoid is switched OFF. E.g. Firefighting, Clamping, Blow Down application etc;

Select solenoid with special version ML
OIL Media Temperature Restricted from 0 °C to 100 °C

MANUAL RESET OFF SOLENOID VALVE



2/2 Internal Pilot Operated Valve
Type: L2002



3/2 Direct Acting NO
Type: L3001: Solenoid size 14



3/2 Universal Valve
Type: L3002

Contact Rotex for
• Any other ambient, fluid temperature, media and application
• UL listed, cUL Listed general purpose Valve

Select solenoid with special version ML
OIL Media Temperature Restricted from 0 °C to 100 °C

Specifications are subject to change without notice

MANUAL RESET OFF SOLENOID VALVE

SPECIFICATION

PORT CONNECTION			PRE-SSURE bar						BODY MATERIAL AND INTERNALS				SEALS					MANUAL OVERRIDE			SOLENOID ENCLOSURE							SUFFIX		POWER VA			
																					WEATHER PROOF				EXPLOSION PROOF								
SIZE	BSP(F)	NPT(F)	MINIMUM	MAXIMUM	ORIFICE (mm)	FLOW FACTOR kv (LPM OF WATER @ 1 bar ΔP)	VALVE TYPE	PILOT PRESSURE	ALUMINIUM	ALUMINIUM + SS	BRASS (STD. PORT NPT)	SS 316 (STD. PORT NPT)	NBR	Viton	EPDM	HYTREL	F. Silicon	NIL	STAYPUT CUM MOMENTARY	MOMENTARY	FLYING LEAD	PLUG IN, IP67	SQ. PLUG IN, IP67	TERMINAL BOX IP67	EXPLOSION PROOF IIC, IP67	IS WITH CIRCUIT Exia IIC T6, IP67	SOLENOID SIZE	OXYGEN	AMMONIA	AC INRUSH	AC HOLDING	DC	CONSTRUCTION REFERENCE NUMBER
2/2 NORMALLY CLOSED																																	
1/2"	4G	4R	0.5	10	12	60	L2002		※			B12	※	S2	S1									T	E		14	✓	✓	13	13	13	1008
3/2 NORMALLY CLOSED																																	
3/2 NORMALLY OPEN																																	
1/8"	1G	1R	0	6	2.5	2.5	L3001		※		B2	B5	※	S2										T	E		14	✓	✓	13	13	13	912
			0	10	1.8	1.8	L3001		※		B2	B5	※	S2										T	E		14	✓	✓	13	13	13	912
			0	6	2.5	2.5	L3001		※		B2	B5	※	S2										T	E		14	✓	✓	13	13	13	912
1/4"	2G	2R	0	10	1.8	1.8	L3001		※		B2	B5	※	S2										T	E		14	✓	✓	13	13	13	912

Cable Entry	T	E																															
		E	x	d		E	x	a		E	x	e	m	b																			
M20 x 1.5	1 9	3 9		8 7	M S	6 6	M S	5 8	M S	5 8	L	T	M	S																			
M25 x 1.5				8 7		6 6		5 8		5 8	L	T																					
1/2" NPT	1 6	3 7		8 7	N S	6 6	N S	5 8	N S	5 8	L	T	N	S																			

※ = Do not specify when opted for. Refer Page # 22 for Value of ※
✓= Options available

⚠ Select solenoid with special version ML

ROTEX
Engineering For The Future

MANUAL RESET OFF SOLENOID VALVE

SPECIFICATION

PORT CONNECTION			PRE-SSURE bar		ORIFICE (mm)	FLOW FACTOR kv (LPM OF WATER @ 1 bar ΔP)	VALVE TYPE	PILOT PRESSURE	BODY MATERIAL AND INTERNALS				SEALS					MANUAL OVERRIDE			SOLENOID ENCLOSURE						SUFFIX		POWER VA			CONSTRUCTION REFERENCE NUMBER
																					WEATHER PROOF				EXPLOSION PROOF									
SIZE	BSP(F)	NPT(F)	MINIMUM	MAXIMUM					ALUMINIUM	ALUMINIUM + SS	BRASS (STD. PORT NPT)	SS 316 (STD. PORT NPT)	NBR	Viton	EPDM	Viton GLT	F. Silicon	NIL	STAYPUT CUM MOMENTARY	MOMENTARY	FLYING LEAD	PLUG IN, IP67	SQ. PLUG IN, IP67	TERMINAL BOX IP67	EXPLOSION PROOF IIC, IP67	IS WITH CIRCUIT Exia IIC T6, IP67	SOLENOID SIZE	OXYGEN	AMMONIA	AC INRUSH	AC HOLDING	DC	
3/2 UNIVERSAL																																
1/4"	2G	2R	0	12	1.2	0.7	L3002		※		B2	B5	※	S2										T	E		14	✓	✓	13	13	13	1026
			0	10	1.6	1.4	L3002		※		B2	B5	※	S2										T	E		14	✓	✓	13	13	13	1026

Cable Entry	T	E				
		Ex d		Ex ia	Ex emb	
M20 x 1.5	19	39	87MS	66MS	58MS	58LTMS
M25 x 1.5			87	66	58	58LT
1/2" NPT	16	37	87NS	66NS	58NS	58LTNS

※ = Do not specify when opted for. Refer Page # 22 for Value of ※
✓= Options available
* Valve type printed in red colour is external pilot air/ air operated valve

Select solenoid with special version ML

LOW POWER SOLENOID VALVE

Low power Solenoid Valve is usually with power consumption below 5 Watt. This valve uses improvised Solenoid operator and a Solenoid enclosure with suitably modified electro magnetic parameters. The power consumption is lowered without much effect on the pulling force.

This ensures that even with Low power consumption, valve continues to operate without a significant effect on the operating characteristics.

Low power valve has significant lower temperature rise (less than 30 °C degree, on continuous energization) This offers a much longer life for the Solenoid.
The Lower power consumption results in Lower inrush level (in case of AC supply) and lower back surge level. This makes the Solenoid Valve more reliable than the conventional versions.

Lower Power consumption also means smaller power supply.

For field BUS powered applications (e.g. ASL), this valve is important to maximize the number of devices in one network. ROTEX recommends using Low power Solenoid valve for such applications.

There is a major change in the construction of the valve, These Valves are classified in a separate chapter.

The valves are available for both AC and DC operating Voltages and in a variety of enclosures like DIN plug, Integral Junction box and Explosion proof.

ROTEX also offers a complete range of NAMUR Solenoid valves with Low power consumption. Refer pages 327 to 332 for more details on the same.

Contact ROTEX for more details.

ROTEX
Engineering For The Future

LOW POWER SOLENOID VALVE

WORKING PRINCIPLE

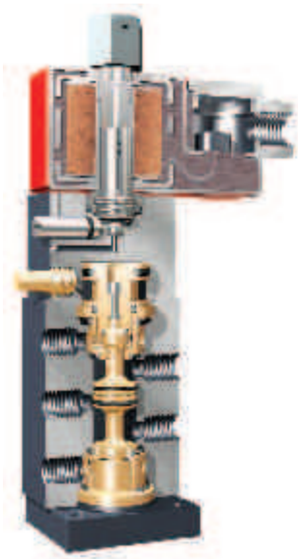

- Highly efficient operator capable of operating with 1.0 Watt coil and pressure rating of 8 bar
- Direct acting Valve can be supplied with 5 Watt coil
- Internal/ External pilot operated Valve can be supplied with 2 Watt coil
- Wide range of 2, 3, 5 port Direct/ Pilot operated Valves can be supplied
- Ideally suited for any BUS
- Low temperature rise
- Wide variation of weather proof, Explosion proof, Solenoid enclosure are available
- Solenoid valves with 1.0 Watt or lower power can also be supplied
- Continuous duty rated solenoid

Contact Rotex in case if valve required by you is not found in this chapter



AMBIENT AND FLUID TEMPERATURE

-20 °C to 80 °C

MEDIA

Air, Inert Gases

APPLICATION

Valve is required to be operated using low solenoid power, e.g. field BUS, battery operated, solar panel operated, directly operated with PLC/ DCS output card

10

Specifications are subject to change without notice

2

LOW POWER SOLENOID VALVE



3/2 NC/NO Direct Acting Valve
Power 2W
Type: P3004

SERIES : 32P



5/2 Single Solenoid Valve
Power 2W
Type: P5001

TYPE	SOLENOID	POWER
P5001	SINGLE	2W

TYPE	ACTION	PILOT	POWER
P3004	NC	-	2W

Contact Rotex for
• Any other ambient, fluid temperature, media and application
• UL listed, c(UL)us Listed general purpose Valve

Add Suffix SL for Ordering SIL capable Certified valve.

ROTEX
Engineering For The Future

LOW POWER SOLENOID VALVE

SPECIFICATION

PORT CONNECTION			PRE-SSURE bar		ORIFICE (mm)	FLOW FACTOR kv (LPM OF WATER @ 1 bar ΔP)	VALVE TYPE	PILOT PRESSURE	BODY MATERIAL AND INTERNALS				SEALS					MANUAL OVERRIDE			SOLENOID ENCLOSURE						SUFFIX		POWER VA			CONSTRUCTION REFERENCE NUMBER
																					WEATHER PROOF				EXPLOSION PROOF								
SIZE	BSP(F)	NPT(F)	MINIMUM	MAXIMUM					ALUMINIUM	ALUMINIUM + SS	BRASS (STD. PORT NPT)	SS 316 (STD. PORT NPT)	NBR	Viton	EPDM	Viton GLT	F. Silicon	NIL	STAYPUT CUM MOMENTARY	MOMENTARY	FLYING LEAD	PLUG IN, IP67	SQ. PLUG IN, IP67	TERMINAL BOX IP67	EXPLOSION PROOF IIC, IP67	IS WITH CIRCUIT Exia IIC T6, IP 67	SOLENOID SIZE	OXYGEN	AMMONIA	AC INRUSH	AC HOLDING	DC	
3/2 NORMALLY CLOSED																																
1/4"	2G	2R	0	15	1.2	0.7	P3004		※		B2	B5	※	S2				※	M6	M8		22	25	T	E		14	✓	✓	2	2	2	902
			0	8	1.6	1.4	P3004		※		B2	B5	※	S2				※	M6	M8		22	25	T	E		14	✓	✓	2	2	2	902
			0	6	1.8	1.8	P3004		※		B2	B5	※	S2				※	M6	M8		22	25	T	E		14	✓	✓	2	2	2	902
																				M8												
1/4"	2G	2R	0	10	5	5	P3017V01		※	B1	B2	B5	※	S2			S19	※	M6	M8			25	T	E		13	✓	✓			1.8	245

REFER SMALL CATALOGE BOOK

| SOLENOID 14 | | | | | | | | | | | | | | | | | | |

LOW POWER SOLENOID VALVE

SPECIFICATION

PORT CONNECTION			PRE-SSURE bar		ORIFICE (mm)	FLOW FACTOR kv (LPM OF WATER @ 1 bar ΔP)	VALVE TYPE	PILOT PRESSURE	BODY MATERIAL AND INTERNALS				SEALS					MANUAL OVERRIDE			SOLENOID ENCLOSURE							SUFFIX		POWER VA			CONSTRUCTION REFERENCE NUMBER
																					WEATHER PROOF				EXPLOSION PROOF										
SIZE	BSP(F)	NPT(F)	MINIMUM	MAXIMUM					ALUMINIUM	ALUMINIUM + SS	BRASS (STD. PORT NPT)	SS 316 (STD. PORT NPT)	NBR	Viton	EPDM	HYTREL	F. Silicon	NIL	STAYPUT CUM MOMENTARY	MOMENTARY	FLYING LEAD	PLUG IN, IP67	SQ. PLUG IN, IP67	TERMINAL BOX IP67	EXPLOSION PROOF IIC, IP67	IS WITH CIRCUIT Exia IIC T6, IP 67	SOLENOID SIZE	OXYGEN	AMMONIA	AC INRUSH	AC HOLDING	DC	
5/2 MONO																																
1/4"	2G	2R	2	10	6	12	P5001		※	B1	B2	B5	※	S2						M0	※	M8			25	T	E		14		✓	2	2	2	500
3/8"	3G	3R	2	10	6	12	P5001		※	B1	B2	B5	※	S2						M0	※	M8			25	T	E		14		✓	2	2	2	501
1/2"	4G	4R	2	10	6	12	P5001		※	B1	B2	B5	※	S2						M0	※	M8			25	T	E		14		✓	2	2	2	501

Cable Entry	T	E												
		Ex d			Ex ia			Ex emb						
M20 x 1.5	19	39	87	MS	66	MS	58	MS	58	LT	MS			
M25 x 1.5			87		66		58		58	LT				
1/2" NPT	16	37	87	NS	66	NS	58	NS	58	LT	NS			

※ = Do not specify when opted for. Refer Page # 22 for Value of ※
✓= Options available
* Valve type printed in red colour is external pilot air/ air operated valve

LATCHED SOLENOID VALVE

LATCH TYPE SOLENOID VALVE

In Fluid Control applications where sudden/ momentary loss of power which can result in safety issues, create a major shut down, affecting up time and in applications where continuous power consumption affects the life of power supply, Latch coil solenoid valves offer the ideal solution.

Using a Magnetic Latching principle, the Latch type solenoid has two coils with opposing windings and a permanent magnet. The solenoid has three terminals, for latching (energizing) and De-latching (de- energizing).

On energizing the Latch coil (either by a pulse of power or continuous power), plunger is pulled and latched magnetically.

The Latch solenoid is designed for continuous energization in case the applications demands. Loss of power or switching off the Latch coil will not change the valve position. Momentary pulse to the De-latch coil will de-energize the solenoid valve.

Optionally a manual override can also manually Latch/ manually De-latch the Solenoid valve.

The Latch type Solenoid system has been designed in a manner to facilitate conversion of single solenoid valve to a stay put device ie. On power failure to retain last position. However, Manual override feature on single Solenoid Valve (if installed) cannot be used to de-energize the Solenoid valve manually. These valve have to be de-enegized electrically.

For AC power supply, a full bridge rectifier is used to convert AC into DC internally.

The latch solenoid can be use to convert any of the rotex single solenoid valve to work as impulse operated for such valve. The manual override will only latch the valve has to be delatched electrically.

3 WIRE

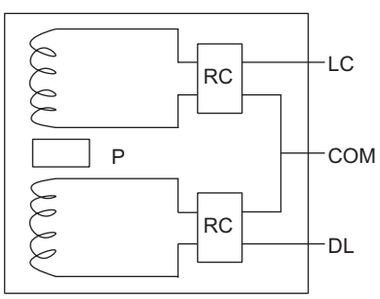

Solenoid LC

Solenoid has inbuilt two windings and a permanent magnet. Both the Windings have inbuilt rectifier. Its one end is common and providing supply to latch coil to pull plunger upward. The magnet keeps plunger pulled and even if supplies to latch coil is removed. The plunger resets when DL coil is momentarily energized.

RC	:	Rectifier bridge
P	:	Permanent magnet
LC	:	Terminal Latch
COM	:	Common
DL	:	Delatch terminal

Solenoid Code LC2

2 WIRE

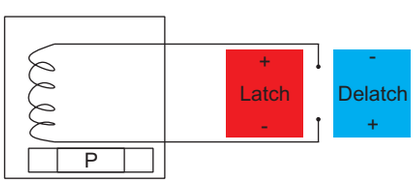

Reverse polarity to actuate/ deactuate solenoid valve

The solenoid consists of single winding and a permanent magnet. The magnet is not strong enough to pull the plunger of its own however it is strong enough to retain the plunger in position once actuated.
The current passed the coil generates magnetic force which assists the magnetic force of the magnet. Due to this plunger gets actuated. Now due to magnet, plunger remains actuated even when power supply to the solenoid is removed.
The plunger can be deactivated by passing current in the coil in reversed direction.
Usually DC powered solenoid can only be offered with this arrangement.

Specifications are subject to change without notice

LATCHED SOLENOID VALVE

WORKING PRINCIPLE

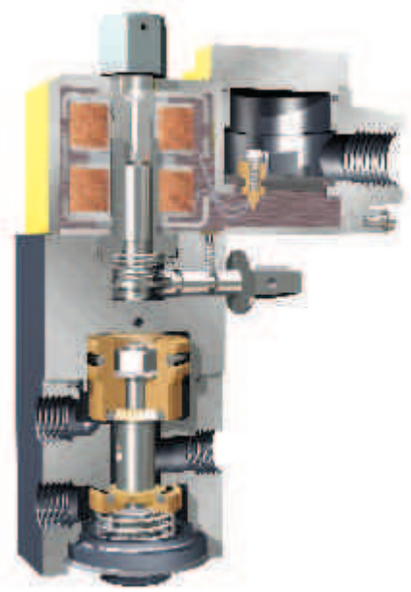

FEATURES

- Continuous duty
- Suitable to operate in high temperature zone (near boiler)
- Ex d version available
- Valves provided with Manual override for latch as detail manually
- In most valve, the valve can be latched manually by turning knob anticlockwise and delatch the valve by turning knob clockwise.
- In normal condition Manual Override knob has to be maintained in horizontal position
- Wide range of 2, 3, 5 port Direct/ Pilot operated Valves can be supplied
- Two wire latch coil can also be supplied (Require reversal of power supply for changing valve Position)

Contact Rotex in case it valve required by you is not found in this chapter

AMBIENT AND FLUID TEMPERATURE

-20 °C to 80 °C

MEDIA

Air, Inert Gases

APPLICATION

2, 3 or 5 port single solenoid valve required to retain position in case of power failure

LATCHED SOLENOID VALVE



2/2 Internal Pilot Operated Valve
Type : 24102LC, L2005



3/2 Directing Acting Normally Closed
Type : L3009

SERIES : 32D



3/2 IPO Normally Closed/
Normally Open
Type : L3012

SERIES : 32D



3/2 Universal Internal/ External Valve
Type : L3024

SERIES : 32D



3/2 Universal Internal/ External Valve
Type : L3018

SERIES : 52S



5/2 Single Solenoid Valve
Type : L5006

Contact Rotex for
- Any other ambient, fluid temperature, media and application
- UL listed, c UL Listed general purpose Valve

Select solenoid with special version LC
OIL Media Temperature Restricted from 0 °C to 100 °C

Specifications are subject to change without notice

LATCHED SOLENOID VALVE

SPECIFICATION

PORT CONNECTION			PRE-SSURE bar		ORIFICE (mm)	FLOW FACTOR kv (LPM OF WATER @ 1 bar ΔP)	VALVE TYPE	PILOT PRESSURE	BODY MATERIAL AND INTERNALS				SEALS					MANUAL OVERRIDE			SOLENOID ENCLOSURE						SUFFIX		POWER VA			CONSTRUCTION REFERENCE NUMBER
																					WEATHER PROOF				EXPLOSION PROOF									
SIZE	BSP(F)	NPT(F)	MINIMUM	MAXIMUM					ALUMINIUM	ALUMINIUM + SS	CF8M & SS316	CF8 & SS316	NBR	Viton	EPDM	HYTREL	F. Silicon	NIL	STAYPUT CUM MOMENTARY	MOMENTARY	FLYING LEAD	PLUG IN, IP67	SQ. PLUG IN, IP67	TERMINAL BOX IP67	EXPLOSION PROOF IIC, IP67	IS WITH CIRCUIT Exia IIC T6, IP 67	SOLENOID SIZE	OXYGEN	AMMONIA	AC INRUSH	AC HOLDING	DC	
2/2 NORMALLY CLOSED																																
1/2"	4G	4R	0.5	10	12	60	L2005				B12	B13	※	S2	S1			※						T	E		14	✓	✓	13	13	13	1009
3/4"	6G	6R	0.5	10	20	110	L2005				B12	B13	※	S2	S1			※						T	E		14	✓	✓	13	13	13	1009
1"	8G	8R	0.5	10	25	185	L2005				B12	B13	※	S2				※						T	E		14			13	13	13	1015
1/2"	4G	4R	1	20	12	60	24102LC				B12	B13	※	S2	S1			※						T	E		14	✓	✓	13	13	13	1009

Cable Entry	T	E											
		Ex d						Ex emb					
M20 x 1.5	19	39	87	MS				58	MS	58	LT	MS	
M25 x 1.5			87					58		58	LT		
1/2" NPT	16	37	87	NS				58	NS	58	LT	NS	

※ = Do not specify when opted for. Refer Page # 22 for Value of ※
✓= Options available

LATCHED SOLENOID VALVE

SPECIFICATION

PORT CONNECTION			PRE-SSURE bar		ORIFICE (mm)	FLOW FACTOR kv (LPM OF WATER @ 1 bar ΔP)	VALVE TYPE	PILOT PRESSURE	BODY MATERIAL AND INTERNALS				SEALS					MANUAL OVERRIDE			SOLENOID ENCLOSURE						SUFFIX		POWER VA			CONSTRUCTION REFERENCE NUMBER
																					WEATHER PROOF				EXPLOSION PROOF									
SIZE	BSP(F)	NPT(F)	MINIMUM	MAXIMUM					ALUMINIUM	ALUMINIUM + SS	BRASS	SS 316	NBR	Viton	EPDM	PTFE+Viton	F. Silicon	NIL	KNOB TYPE MA	MOMENTARY	FLYING LEAD	PLUG IN, IP67	SQ. PLUG IN, IP67	TERMINAL BOX IP67	EXPLOSION PROOF IIC, IP67	IS WITH CIRCUIT Exia IIC T6, IP 67	SOLENOID SIZE	OXYGEN	AMMONIA	AC INRUSH	AC HOLDING	DC	
3/2 NORMALLY CLOSED																																
1/4"	2G	2R	0	20	1.2	0.7	L3009		※		B2	B5	※	S2	S1	S8	S19	※	M7					T	E		14	✓	✓	13	13	13	1022
			0	15	1.6	1.4	L3009		※		B2	B5	※	S2	S1	S8	S19	※	M7					T	E		14	✓	✓	13	13	13	1022
			0	10	1.8	1.8	L3009		※		B2	B5	※	S2	S1	S8	S19	※	M7					T	E		14	✓	✓	13	13	13	1022
			0	6	2.5	3.5	L3009		※		B2	B5	※	S2	S1	S8	S19	※	M7					T	E		14	✓	✓	13	13	13	1022
			0	8	2.2	2.5	L3009		※		B2	B5	※	S2	S1	S8	S19	※	M7					T	E		14	✓	✓	13	13	13	1022
1/4"	2G	2R	2	10	7	18	L3012				B2	B5	※	S2			S19	※	M7					T	E		14		✓	13	13	13	918
3/8"	3G	3R	2	10	10	38	L3012			※		B5	※	S2			S19	※	M7					T	E		14		✓	13	13	13	919
			2	10	10	38	L3012V01				B17		※	S2			S19	※						T	E		14		✓	13	13	13	
3/2 NORMALLY OPEN																																

Cable Entry	T	E									
		Ex d					Ex emb				
M20 x 1.5	19	39	87	MS			58	MS	58	LT	MS
M25 x 1.5			87				58		58	LT	
1/2" NPT	16	37	87	NS			58	NS	58	LT	NS

※ = Do not specify when opted for. Refer Page # 22 for Value of ※
✓= Options available

ROTEX
Engineering For The Future

LATCHED SOLENOID VALVE

SPECIFICATION

PORT CONNECTION			PRE-SSURE bar					PILOT PRESSURE	BODY MATERIAL AND INTERNALS				SEALS					MANUAL OVERRIDE			SOLENOID ENCLOSURE							SUFFIX		POWER VA			CONSTRUCTION REFERENCE NUMBER
																					WEATHER PROOF			EXPLOSION PROOF									
SIZE	BSP(F)	NPT(F)	MINIMUM	MAXIMUM	ORIFICE (mm)	FLOW FACTOR kv (LPM OF WATER @ 1 bar ΔP)	VALVE TYPE		ALUMINIUM	ALUMINIUM + SS	BRASS	SS 316	NBR	Viton	EPDM	Viton GLT	F. Silicon	NIL	STAYPUT CUM MOMENTARY	MOMENTARY	FLYING LEAD	PLUG IN, IP67	SQ. PLUG IN, IP67	TERMINAL BOX IP67	EXPLOSION PROOF IIC, IP67	IS WITH CIRCUIT Exia IIC T6, IP 67	SOLENOID SIZE	OXYGEN	AMMONIA	AC INRUSH	AC HOLDING	DC	
3/2 UNIVERSAL																																	
1/4"	2G	2R	0	10	5	8	L3024				B2	B5	※			S2G	S19	※						T	E		14	✓		13	13	13	1017
3/8"	3G	3R	0	10	10	30	L3018				B2	B5	※	S2G		S2G	S19	※						T	E					20	20	20	
1/2"	4G	4R	0	10	10	30	L3018				B2	B5	※	S2G		S2G	S19	※						T	E					20	20	20	
5/2 LATCH																																	
1/4"	2G	2R	2	8	6	12	L5006				B2	B5	※	S2			S19	※						T	E		14		✓	13	13	13	953
1/2"	4G	4R	2	8	12	50	L5006				B2	B5	※	S2				※						T	E		14		✓	13	13	13	954
1"	8G	8R	2	8	25	185	L5006V01				B17	B5	※	S2				※						T	E		14		✓	13	13	13	955

Cable Entry	T	E											
		Ex d					Ex emb						
M20 x 1.5	19	39	87	M		S58	M	S58	LT	M	S		
M25 x 1.5			87			58		58	LT				
1/2" NPT	16	37	87	N		S58	N	S58	LT	N	S		

※ = Do not specify when opted for. Refer Page # 22 for Value of ※
✓= Options available

Specifications are subject to change without notice

REDUNDANT SOLENOID VALVE

Redundant function is most popular in ESD (Emergency shut Down) type application. Usually these products are part of the shut down loops and connected to an independent shut down control system which may be Double or Triple redundant.

Depending on the application demand, three types of redundant systems are in use:

1oo2 type voting system for high safety loops where in tripping of any of the switching circuit will trip the application. This is typically required for critical circuits where in failure to shut down safely can have catastrophic consequences.

2oo2 type voting System for high demand loops requiring high uptime avoiding spurious trips due to equipment mal functions. These types of systems are called for in mission critical application where in equipment failure can result in heavy losses for plant.

2oo3 type voting system combining high demand and safety in system using Triple Redundant control systems to ensure safety and high uptime. These types of system are installed on most critical operations in highly hazardous process Industries.

ROTEX is in a position to offer solutions for all of the above conditions using a Redundancy in Operator type principle which essentially combines independent Valve operating components arranged in redundant configurations. This concept is most superior to the Redundancy in Solenoid since it makes the complete valve component redundant to each other reducing the probability of failure of these valves. The system, essentially a single block solution, eliminates all interconnecting point leakage thereby increasing reliability and ensuring trouble free operation.

Especially for pilot operated solenoid valves, ROTEX offers a solution using Redundant operators in application requiring high availability of equipment to avoid spurious tripping. These are classified as Valves with Redundant Operators.

ROTEX can also offer the Redundant Solenoid valves with In build Non Contact type switches to test the system availability for shutdown.

Contact ROTEX for details



AMBIENT AND FLUID TEMPERATURE

-20 °C to 80 °C

MEDIA

Air, Inert Gases

APPLICATION

ESD application where spurious tripping due to power failure to the solenoid/ valve malfunction can cause great damage to the safety of the equipment/ material being processed

ROTEX
Engineering For The Future

REDUNDANT SOLENOID VALVE

SERIES : 32R



3/2 Direct Acting Redundant Valve
Type : 30127V01/30127V01LA

SERIES : 32R



3/2 Direct Acting Redundant Valve
Type : 30127V01LW



5/2 Single Solenoid
with Redundancy in Operator
Type: 51427

Contact Rotex for
- Any other ambient, fluid temperature, media and application
- UL listed, c UL Listed general purpose Valve

10

SPECIFICATION

PORT CONNECTION			PRE-SSURE bar		ORIFICE (mm)	FLOW FACTOR kv (LPM OF WATER @ 1 bar ΔP)	VALVE TYPE	PILOT PRESSURE	BODY MATERIAL AND INTERNALS				SEALS					MANUAL OVERRIDE			SOLENOID ENCLOSURE						SUFFIX		POWER VA			CONSTRUCTION REFERENCE NUMBER
																					WEATHER PROOF				EXPLOSION PROOF								
SIZE	BSP(F)	NPT(F)	MINIMUM	MAXIMUM					ALUMINIUM	ALUMINIUM + SS	BRASS (STD. PORT NPT)	SS 316 (STD. PORT NPT)	NBR	Viton	EPDM	Viton GLT	F. Silicon	NIL	STAYPUT CUM MOMENTARY	MOMENTARY	FLYING LEAD	PLUG IN, IP67	SQ. PLUG IN, IP67	TERMINAL BOX IP67	EXPLOSION PROOF IIC, IP67	IS WITH CIRCUIT Exia IIC T6, IP 67	SOLENOID SIZE	OXYGEN	AMMONIA	AC INRUSH	AC HOLDING	DC	
2/2 NORMALLY CLOSED																																
3/2 NORMALLY CLOSED																																
1/4"	2G	2R	0	10	5	5	30127V01	※	B1	B2	B5	※			S2G	S19	※	M6	M8				T	E		14		✓	18	12	8	913
			0	10	5	5	30127V01LA	※	B1	B2	B5	※			S2G	S19	※	M6	M8				T	E		14		✓	3.5	3.5	3.5	
			0	10	5	5	30127V01LW	※	B1	B2	B5	※			S2G	S19	※	M6	M8				T	E		14		✓	1.8	1.8	1.8	
1/2"	4G	4R	0	10	10	30	30127V01	※	B1	B2	B5	※			S2G	S19	※	M6	M8				T	E		18		✓	20	20	15	
5/2 MONO																																
1/4"	2G	2R	2	10	6	12	51427		※	B1	B2	B5	※	S2				※					T	E		14		✓	18	12	8	964
3/8"	3G	3R	2	10	10	38	51427		※	B1	B2	B5	※	S2			S19	※					T	E		14		✓	18	12	8	965
1/2"	4G	4R	2	10	16	75	51427		※	B1	B2	B5	※	S2			S19	※					T	E		14		✓	18	12	8	966

| VALVE TYPE 51427 | | | | | | | | | | | | | | | | | | |

PORT CONNECTIONS

TYPE	ACTION	INLET	OUTLET	OUTLET	EXHAUST	EXHAUST	PILOT EXHAUST	EXT PILOT INLET
			INTRINSICALLY SAFE SOLENOID VALVE					
20101	2/2 NC	2	1					
20108	2/2NC	2	1					
21101	2/2NC	1	2					
21102	2/2NC	1	2					
22101	2/2NC	1	2					
23103	2/2NC	1	2					7
23104	2/2NC	2 OR 1	1 OR 2					7
24101	2/2NC	1	2					
24102	2/2NC	1	2					
24103	2/2NC	1	2					
24101L	2/2NC	2	1					
24103L	2/2NC	2	1					
20201	2/2NO	3	2					
21201	2/2NO	1	2					
21202	2/2NO	1	2					
23203	2/2NO	2	1					7
23204	2/2NO	2 OR 1	1 OR 2					7
24201	2/2NO	1	2					
24202	2/2NO	1	2					
24203	2/2NO	1	2					
30111	3/2NC	1	2			3		
30125	3/2NC	1	2			3		
30170	3/2NC	1	2			3		
31119	3/2NC	1	2			3	6	
31120	3/2NC	1	2			3	6	
31123	3/2NC	1	2			3	6	
30201	3/2NO	3	2			1		
31205	3/2NO	3	2			1	6	7
31209	3/2NO	3	2			1	6	
31210	3/2NO	3	2			1	6	
30301	3/2UNI	1 OR 3	2			3 OR 1		
32301	3/2UNI	1 OR 3	2			3 OR 1	6	
57400	5/2BI	1	2	4	3	5	6	
57401	5/2BI	1	2	4	3	5	6	
57404	5/2BI	1	2	4	3	5	6	
57424	5/2BI	1	2	4	3	5	6	
57440	5/2BI	1	2	4	3	5	6	
57441	5/2BI	1	2	4	3	5	6	
57445	5/2BI	1	2	4	3	5	6	

PORT CONNECTIONS

TYPE	ACTION	INLET	OUTLET	OUTLET	EXHAUST	EXHAUST	PILOT EXHAUST	EXT PILOT INLET
				INTRINSICALLY SAFE SOLENOID VALVE				
51400	5/2MONO	1	2	4	3	5	6	
51401	5/2MONO	1	2	4	3	5	6	
51404	5/2MONO	1	2	4	3	5	6	
51432	5/2MONO	1	2	4	3	5	6	
51433	5/2MONO	1	2	4	3	5	6	
51440	5/2MONO	1	2	4	3	5	6	
51441	5/2MONO	1	2	4	3	5	6	
51445	5/2MONO	1	2	4	3	5	6	
				5/2 MONO				
I2001	2/2NC	2						
I3001	3/2NC	1	2	3				
I3003	3/2NC	1	2		3		6	
I3006	3/2NC	1	2		3			
I3005	3/2NO	3	2		1		6	
I3002	3/2UNI	1 OR 3	2		3 OR 1			
I3004	3/2UNI	1 OR 3	2		3 OR 1		6	7
I3007	3/2UNI	1 OR 3	2		3 OR 1		6	
I5002	5/2BI		2	4	3	5	6	
I5004	5/2BI		2	4	3	5	6	
I5006	5/2BI		2	4	3	5	6	
I5001	5/2MONO	1	2	4		5	6	
I5003	5/2MONO	1	2	4	3	5	6	
I5005	5/2MONO	1	2	4	3	5	6	
				MANUAL RESET ON VALVE WITH INTRINSICALLY SAFE SOLENOID VALVE				
M2001	IM2/2NC	2	1					
M2002	IM2002	2	1					
M3001	IM3/2NC	1	2		3		6	
M3003	IM3/2NC	1	2		3			
M3011	IM3/2NO	3	2		1		6	
M3002	IM3/2UNI	1 OR 3	2		3 OR 1		6	7
M3004	IM3/2UNI	1 OR 3	2		3 OR 1			
M3013	IM3/2UNI	1 OR 3	2		3 OR 1		6	
M5001	IM5/2MONO	1	2	4	3	5	6	
M5002	IM5/2MONO	1	2	4	3	5	6	
M5003	IM5/2MONO	1	2	4	3	5	6	

Specifications are subject to change without notice

PORT CONNECTIONS

TYPE	ACTION	INLET	OUTLET	OUTLET	EXHAUST	EXHAUST	PILOT EXHAUST	EXT PILOT INLET
MANUAL RESET ON SOLENOID VALVE								
M2003	2/2NC	2	1					
M2004	2/2NC	2	1					
M2005	22NC	2	1					
M2006	2/2NO	2	1					
M3005	3/2NC	1	2		3			
M3008	3/2NC	1	2		3		6	
M3010	3/2NO	3	2		1		6	
M3006	3/2UNI	1 OR 3	2		3 OR 1			
M3007	3/2UNI	1 OR 3	2		3 OR 1			
M3009	3/2UNI	1 OR 3	2		3 OR 1		6	7
M3012	3/2UNI	1 OR 3	2		3 OR 1		6	
M5004	5/2MONO	1	2	4	3	5	6	
M5005	5/2MONO	1	2	4	3	5	6	
M5006	5/2MONO	1	2	4	3	5	6	
TAMPER PROOF MANUAL RESET ON SOLENOID VALVE								
M3015	3/2UNI	1 OR 3	2		3 OR 1			
M3014	3/2 NC	1	2		3		6	
MANUAL RESET OFF SOLENOID VALVE								
L2001	2/2NC	2	1					
L2002	2/2NC	2	1					
L3003	3/2NC	1	2	3				
L3006	3/2NC	1	2	3			6	
L3001	3/2NO	3	2	1				
L3007	3/2NO	3	2	1			6	
L3015	3/2NO	3	2	1				
L3002	3/2UNI	1 OR 3	2		3 OR 1			
L3004	3/2UNI	1 OR 3	2		3 OR 1			
L3005	3/2UNI	1 OR 3	2		3 OR 1			
L3016	3/2UNI	1 OR 3	2		3 OR 1		6	7
L3020	3/2UNI	1 OR 3	2		3 OR 1		6	
REDUNDANT SOLENOID VALVE								
21107	2/2NC	2	1					
30127	3/2NC	1	2		3			
31115	3/2NC	1	2		3		6	
31124	3/2NC	1	2		3		6	
51427	5/2MONO	1	2	4	3	5	6	

PORT CONNECTIONS

TYPE	ACTION	INLET	OUTLET	OUTLET	EXHAUST	EXHAUST	PILOT EXHAUST	EXT PILOT INLET
				LOW POWER SOLENOID VALVE				
P3001	3/2NC	1	2		3		6	
P3004	3/2NC	1	2		3			
P3007	3/2NC	1	2		3		6	
P3003	3/2NO	3	2		1		6	
P3009	3/2NO	3	2		1		6	
P3002	3/2UNI	1 OR 3	2		3 OR 1			
P3005	3/2UNI	1 OR 3	2		3 OR 1			
P3006	3/2UNI	1 OR 3	2		3 OR 1		6	7
P3008	3/2UNI	1 OR 3	2		3 OR 1		6	7
P5004	5/2BI	1	2	4	3	5	6	
P5005	5/2BI	1	2	4	3	5	6	
P5006	5/2BI	1	2	4	3	5	6	
P5008	5/2BI	1	2	4	3	5	6	
P5010	5/2BI	1	2	4	3	5	6	
P5012	5/2BI	1	2	4	3	5	6	
P5001	5/2MONO	1	2	4	3	5	6	
P5002	5/2MONO	1	2	4	3	5	6	
P5003	5/2MONO	1	2	4	3	5	6	
P5007	5/2MONO	1	2	4	3	5	6	
P5009	5/2MONO	1	2	4	3	5	6	
P5011	5/2MONO	1	2	4	3	5	6	
				LATCHED SOLENOID VALVE				
L2003	2/2NC	2	1					
L2004	2/2NC	2	1					
L2005	2/2NC	2	1					
L3009	3/2NC	1	2		3			
L3011	3/2NC	1	2		3			
L3012	3/2NC	1	2		3		6	
L3013	3/2NO	3	2		1		6	
L3010	3/2UNI	1 OR 3	2	3 OR 1				
L3014	3/2UNI	1 OR 3	2	3 OR 1			6	7
L3017	3/2UNI	1 OR 3	2	3 OR 1				
L3018	3/2UNI	1 OR 3	2	3 OR 1				
L3019	3/2UNI	1 OR 3	2	3 OR 1			6	
L5004	5/2MONO	1	2	4	3	5	6	
L5005	5/2MONO	1	2	4	3	5	6	
L5006	5/2MONO	1	2	4	3	5	6	

Specifications are subject to change without notice

2 PORT SOLENOID VALVE

DIMENSIONS

All Dimensions are in mm

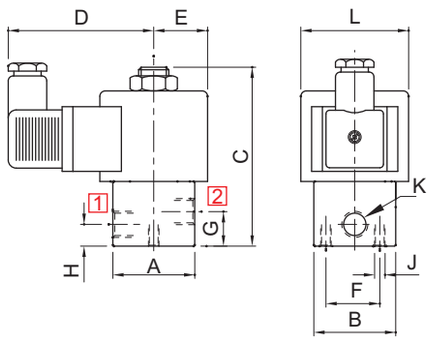

SQ. PLUG IN SOLENOID TYPE (25, 65CR)

K (Port Size)	A	B	C	D	E	F	G	H	J	L	BODY MATL.	CONST. REF.
VALVE TYPE : I2001, M2001, M2003, L2003												
1/8", 1/4"	38	38	87	68	25	25	16	10.5	M6	50	AL, BR	850
3/8", 1/2"	60	38	95	68	25	25	20.5	20.5	M6	50	AL, BR	6
1/8", 1/4"	44	Ø48	91	68	25	25	15	11	M6	50	SS	850
3/8", 1/2"	58	Ø62	111	68	25	25	15	11	M6	50	SS	8
VALVE TYPE : M2004												
1/8", 1/4"	50	50	104	68	25	25	17	10.5	M6	50	AL, BR	9
3/8", 1/2"	65	50	104	68	25	25	14	14	M6	50	AL, BR	10
1/4"	44	Ø48	91	68	25	25	14	14	M6	50	SS	13
1/2"	58	Ø62	111	68	29	25	14	14	M6	50	SS	14

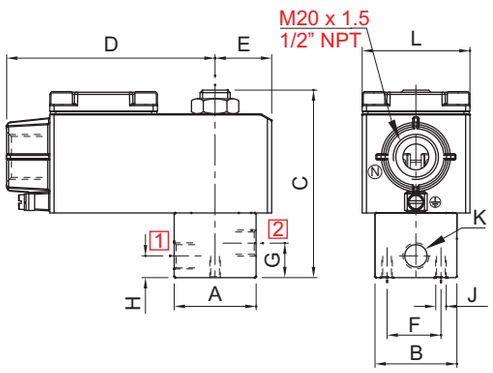

TERMINAL BOX/ Ex d ENCLOSURE (16, 19, 37, 39, 58, 58LT, 67)

K (Port Size)	A	B	C	D	E	F	G	H	J	L	BODY MATL.	CONST. REF.
VALVE TYPE : I2001, M2001, M2003, L2003												
1/8", 1/4"	38	38	87	97	26	25	16	10.5	M6	50	AL, BR	850
3/8", 1/2"	60	38	95	97	26	25	20.5	20.5	M6	50	AL, BR	6
1/8", 1/4"	44	Ø48	91	97	26	25	15	11	M6	50	SS	850
3/8", 1/2"	58	Ø62	111	103	26	25	15	11	M6	50	SS	8
VALVE TYPE : M2004, L2004												
1/8", 1/4"	50	50	102	103	28	25	17	10.5	M6	50	AL, BR	9
3/8", 1/2"	65	50	102	103	28	25	14	14	M6	50	AL, BR	10
1/4"	44	Ø48	91	103	28	25	14	14	M6	50	SS	13
1/2"	58	Ø62	111	103	29	25	14	14	M6	50	SS	14

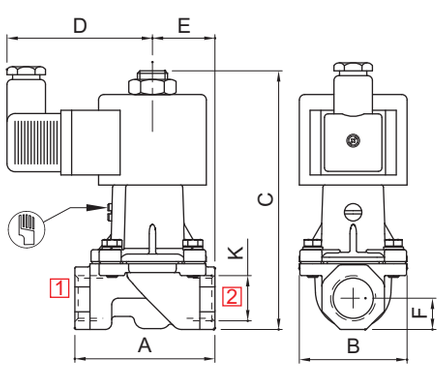

SQ. PLUG IN SOLENOID TYPE (25, 65CR)

NW	K (Port Size)	A	B	C	D	E	F	CONST. REF.
VALVE TYPE : M2005, M2002								
12	1/2", 3/8", 1/4"	65	50	124	66	29	15	29
20	3/4"	84	64	134	66	42	17	30
25	1"	110	93	148	66	51	25	31
50	2"	165	170	186	66	76	38	32

2 PORT SOLENOID VALVE

DIMENSIONS

All Dimensions are in mm

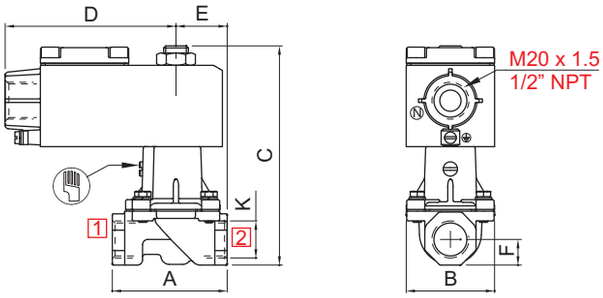

TERMINAL BOX/ Ex d ENCLOSURE (16, 19, 37, 39, 58, 58LT, 67)

NW	K (Port Size)	A	B	C	D	E	F	CONST. REF.
VALVE TYPE : M2002, M2005								
12	1/2", 3/8", 1/4"	65	50	124	97	29	15	29
20	3/4"	84	64	134	97	42	17	30
25	1"	110	93	148	97	51	25	31
50	2"	165	170	186	97	76	38	32

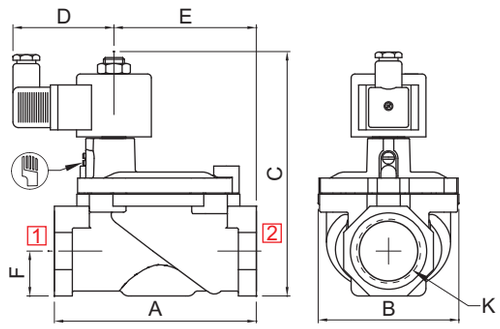

SQ. PLUG IN SOLENOID TYPE (25, 65CR)

NW	K (Port Size)	A	B	C	D	E	F	CONST. REF.
VALVE TYPE : M2002, M2005								
25	1"	110	82	146	68	76	22	33
40	11/4"	135	94	163	68	95	30	34
40	11/2"	135	94	163	68	95	30	35
50	2"	165	140	180	68	128	38	36

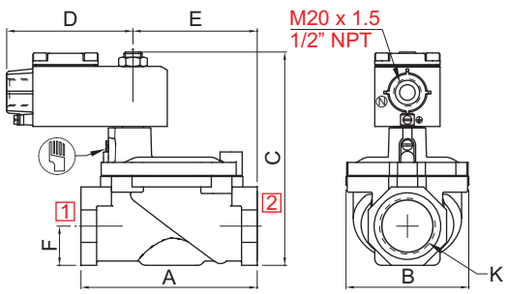

TERMINAL BOX/ Ex d ENCLOSURE (16, 19, 37, 39, 58, 58LT, 67)

NW	K (Port Size)	A	B	C	D	E	F	CONST. REF.
VALVE TYPE : M2002, M2005								
25	1"	110	82	146	97	76	22	33
40	11/4"	135	94	163	97	95	30	34
40	11/2"	135	94	163	97	95	30	35
50	2"	165	140	180	97	128	38	36

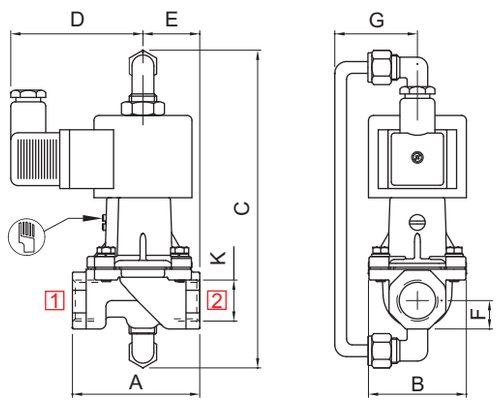

SQ. PLUG IN SOLENOID TYPE (25, 65CR)

NW	K (Port Size)	A	B	C	D	E	F	G	CONST. REF.
VALVE TYPE : M2006									
12	1/2", 3/8", 1/4"	65	50	163	68	29	15	42	37
20	3/4"	84	64	178	68	42	17	48	38
25	1"	110	93	187	68	51	25	61	39
50	2"	165	170	227	68	76	38	101	40

Specifications are subject to change without notice

2 PORT SOLENOID VALVE

DIMENSIONS

All Dimensions are in mm

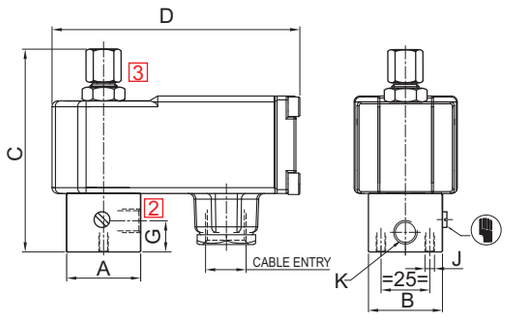

Ex ia SOLENOID WITH BOOSTER CIRCUIT (66)

K (Port Size)	A	B	C O	G	D	J	BODY MATL.	CONST. REF.
VALVE TYPE : 20201								
1/8", 1/4"	38	38	126	16	127	M6	AL, BR	981
3/8", 1/2"	60	38	138	20.5	127	M6	AL, BR	854
1/8", 1/4"	44	Ø48	134	15	127	M6	SS	855
3/8", 1/2"	58	Ø62	154	14	127	M6	SS	856

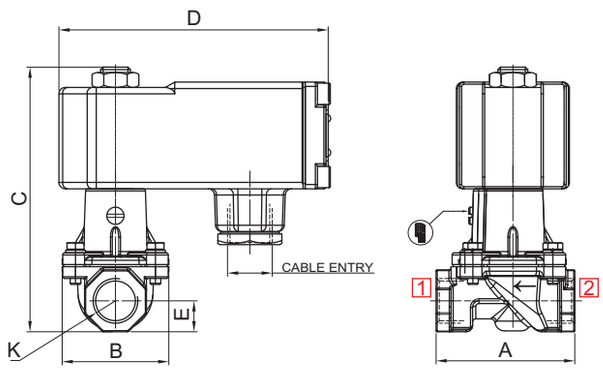

Ex ia SOLENOID WITH BOOSTER CIRCUIT (66)

NW	K (Port Size)	A	B	C	D	E	F	L	CONST. REF.
VALVE TYPE : 24101, 24102									
12	1/2"	65	50	162	127	29		--	857
20	3/4"	84	64	172	127	42	--	--	858
25	1"	110	93	186	127	51	--	--	859
50	2"	165	170	224	127	76	--	--	860

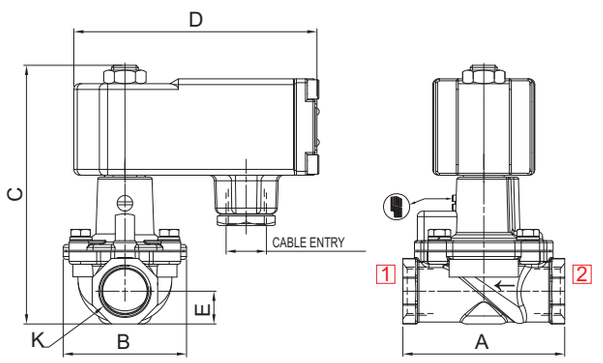

Ex ia SOLENOID WITH BOOSTER CIRCUIT (66)

NW	K (Port Size)	A	B	C	D	E	F	L	CONST. REF.
VALVE TYPE : 24101, 24102									
25	1"	110	82	184	127	76			861
40	11/4"	135	94	201	127	95			862
40	11/2"	135	94	201	127	95			863
50	2"	165	140	218	127	128			864

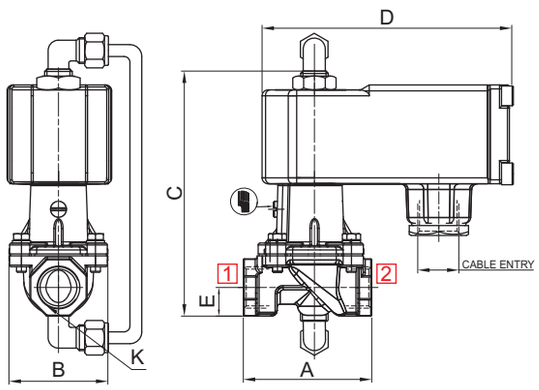

Ex ia SOLENOID WITH BOOSTER CIRCUIT (66)

NW	K (Port Size)	A	B	C	D	E	F	G	L	CONST. REF.
VALVE TYPE : 24201, 24202										
12	1/2"	65	50	184	127	29				865
20	3/4"	84	64	198	127	42				866
25	1"	110	93	208	127	51				867
50	2"	165	170	248	127	76				868

Specifications are subject to change without notice

2 PORT SOLENOID VALVE

DIMENSIONS

All Dimensions are in mm

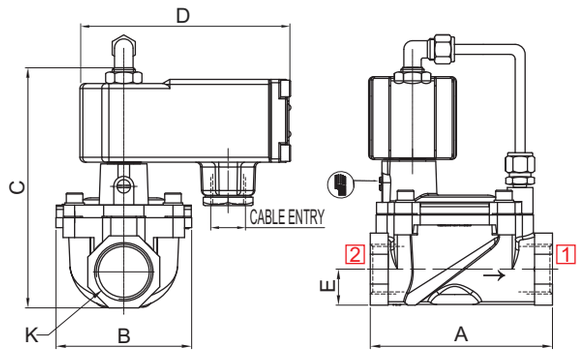

Ex ia SOLENOID WITH BOOSTER CIRCUIT (66)

NW	K (Port Size)	A	B	C	D	E	F	L	CONST. REF.
VALVE TYPE : 24201, 24202									
25	1”	110	82	184	127	76			869
40	11/4”	135	94	202	127	95			870
40	11/2”	135	94	202	127	95			871
50	2”	165	140	220	127	128			872

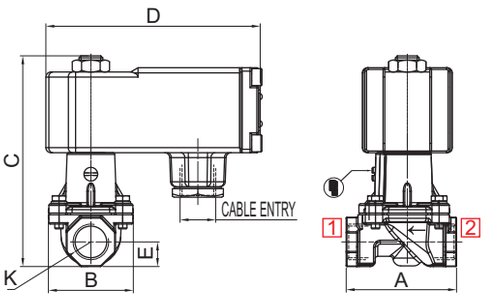

Ex ia SOLENOID WITH BOOSTER CIRCUIT (66)

NW	K (Port Size)	A	B	C	D	E	F	L	CONST. REF.
VALVE TYPE : 24101, 24102									
12	1/2”	65	50	174	87	29	15	58	983
20	3/4”	84	64	187	87	42	17	58	984
25	1”	110	95	205	87	51	25	58	985
40	11/4”	135	94	226	87	66	30	58	986
40	11/2”	135	94	226	87	66	30	58	987
50	2”	165	170	262	87	76	38	58	988

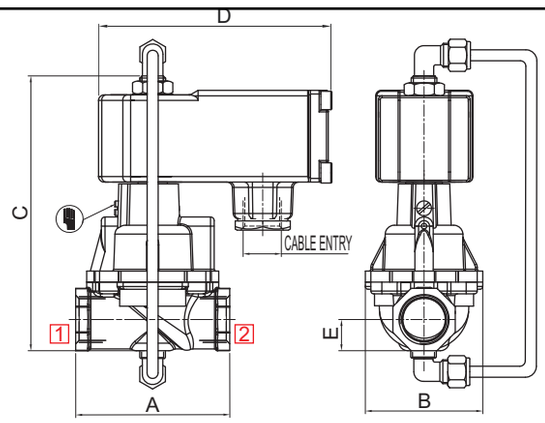

Ex ia SOLENOID WITH BOOSTER CIRCUIT (66)

NW	K (Port Size)	A	B	C	E	F	G	CONST. REF.
VALVE TYPE : 21201, 21202								
12	1/2”	65	50	197	29	15	42	989
20	3/4”	84	64	210	42	17	48	990
25	1”	110	95	228	51	25	61	991
40	11/4”	135	94	209	66	30	61	992
40	11/2”	135	94	209	66	30	61	993
50	2”	165	170	285	76	38	101	994

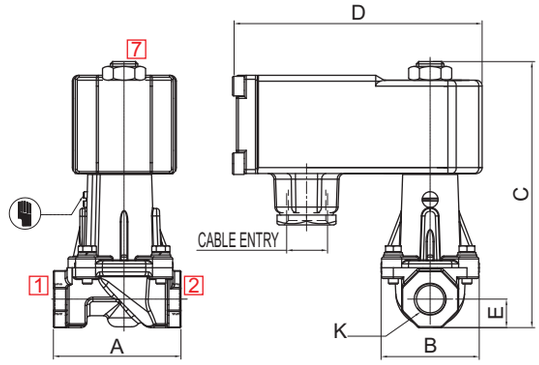

Ex ia SOLENOID WITH BOOSTER CIRCUIT (66)

NW	K (Port Size)	A	B	C	D	E	F	L	CONST. REF.
VALVE TYPE : 22101									
12	1/2”	65	50	174	87	29	15	58	873
20	3/4”	84	64	187	87	42	17	58	874
25	1”	110	95	205	87	51	25	58	875
40	11/4”	135	94	226	87	66	30	58	878
40	11/2”	135	94	226	87	66	30	58	879
50	2”	165	170	262	87	76	38	58	880

ROTEX
Engineering For The Future

2 PORT SOLENOID VALVE

DIMENSIONS

All Dimensions are in mm

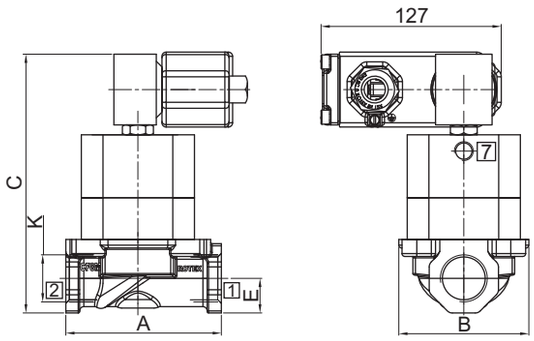

Ex ia SOLENOID WITH BOOSTER CIRCUIT (66)

NW	K (Port Size)	A	B	C	D	E	F	H	CONST. REF.
VALVE TYPE : 23103, 23203									
12	1/2”	65	50	150	57	152	29	15	881
20	3/4”	84	64	171	63	158	32	17	882
25	1”	110	95	193	80	174	40	25	883
40	11/4”	135	94	242	100	185	50	30	884
40	11/2”	135	94	242	100	185	50	30	885
50	2”	165	170	271	110	177	55	38	886

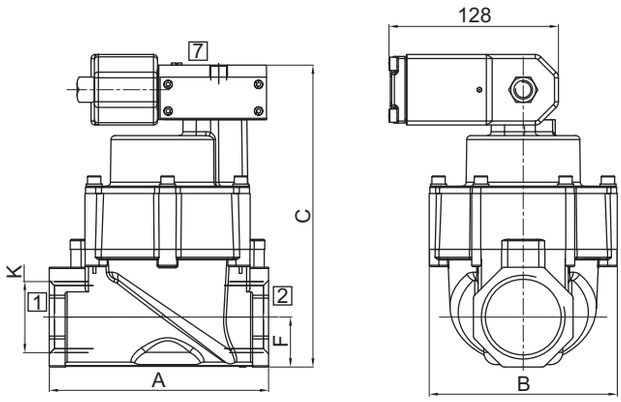

Ex ia SOLENOID WITH BOOSTER CIRCUIT (66)

NW	K (Port Size)	A	B	C	D	E	F	G	CONST. REF.
VALVE TYPE : 23104, 23204									
12	1/2”	65	50	140	57	15	29	117	887
20	3/4”	84	64	161	63	17	42	121	888
25	1”	110	95	183	80	25	52	137	889
40	11/4”	135	94	232	100	30	66	139	890
40	11/2”	135	94	232	100	30	66	139	891
50	2”	165	170	261	110	38	76	174	892

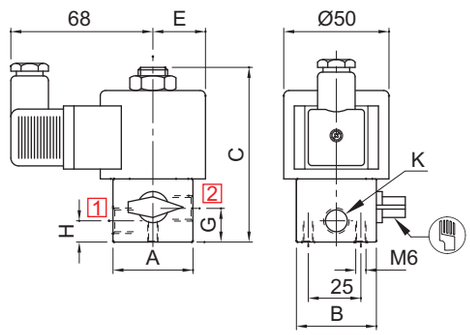

SQ. PLUG IN SOLENOID TYPE (25, 65CR)

K (Port Size)	A	B	C	E	G	H	BODY MATL.	CONST. REF.
VALVE TYPE : L2001,L2003								
1/8”, 1/4”	38	38	87	25	16	10.5	AL, BR	898
3/8”, 1/2”	60	38	95	25	20.5	20.5	AL, BR	1001
1/8”, 1/4”	44	Ø48	91	25	15	11	SS	898
3/8”, 1/2”	58	Ø62	111	22	15	11	SS	1002
VALVE TYPE : 20126, L2004								
1/8”, 1/4”	50	50	104	25	17	10.5	AL, BR	1003
3/8”, 1/2”	65	50	104	25	14	14	AL, BR	1004
1/4”	44	Ø48	91	25	14	14	SS	1005
1/2”	58	Ø62	111	29	14	14	SS	1006

Specifications are subject to change without notice

2 PORT SOLENOID VALVE

DIMENSIONS

All Dimensions are in mm

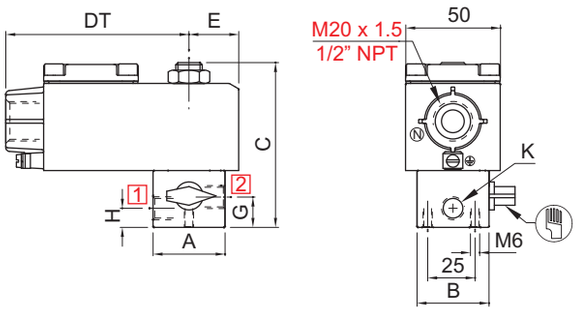

TERMINAL BOX/ Ex d ENCLOSURE (16, 19, 37, 39, 58, 58LT, 67)

K (Port Size)	A	B	C	D T	E	G	H	BODY MATL.	CONST. REF.
VALVE TYPE : L2001, L2003									
1/8", 1/4"	38	38	87	97	26	16	10.5	AL, BR	898
3/8", 1/2"	60	38	95	97	26	20.5	20.5	AL, BR	1001
1/8", 1/4"	44	Ø48	91	97	26	15	11	SS	898
3/8", 1/2"	58	Ø62	111	97	28	15	11	SS	1002
VALVE TYPE : L2004									
1/8", 1/4"	50	50	102	103	28	17	10.5	AL, BR	1003
3/8", 1/2"	65	50	102	103	28	14	14	AL, BR	1004
1/4"	44	Ø48	91	103	28	14	14	SS	1005
1/2"	58	Ø62	111	103	29	14	14	SS	1006

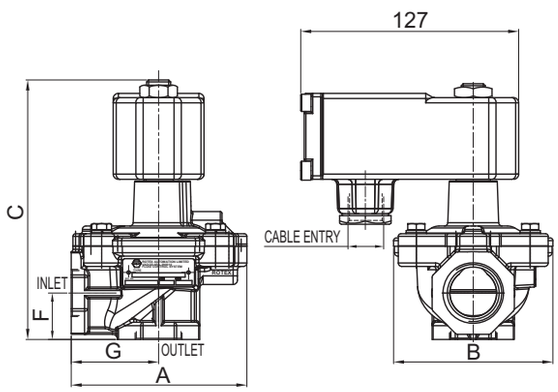

Ex ia SOLENOID WITH BOOSTER CIRCUIT (66)

NW	K (Port Size)	A	B	C	D	E	F	G	CONST. REF.
VALVE TYPE : 24100, 24115									
20	3/4"	103	93	177	87	52	27	51	893
25	1"	103	93	177	87	52	27	51	894
40	11/4"	160	170	213	87	76	38	84	895
40	11/2"	160	170	213	87	76	38	84	895
50	2"	160	170	213	87	76	38	84	896

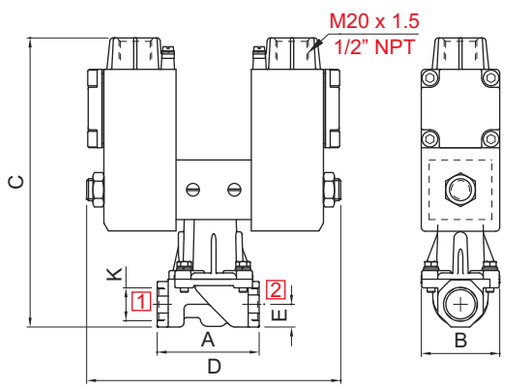

TERMINAL BOX/ Ex d ENCLOSURE (16, 19, 37, 39, 58, 58LT, 67)

NW	K (Port Size)	A	B	C	D	E	CONST. REF.
VALVE TYPE : 21107							
12	1/2"	65	50	185	162	15	899
20	3/4"	84	64	198	162	17	900
25	1"	110	95	216	162	25	901

3 PORT SOLENOID VALVE

DIMENSIONS

All Dimensions are in mm

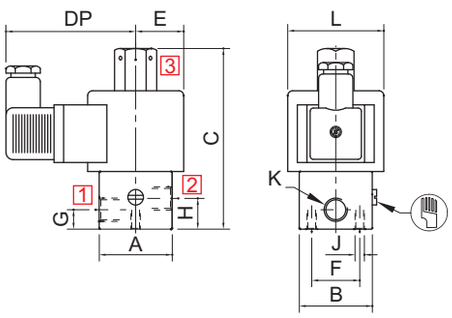

SQ. PLUG IN SOLENOID TYPE (25, 65CR)

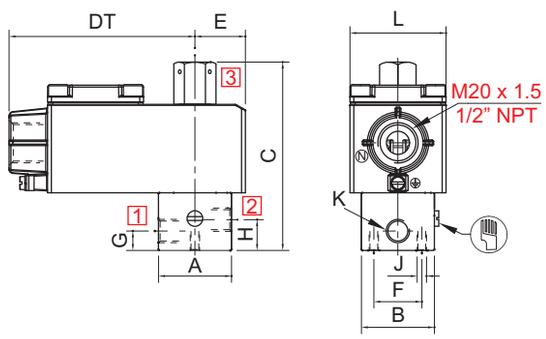

TERMINAL BOX/ Ex d ENCLOSURE (16, 19, 37, 39, 58, 58LT, 67)

K (Port Size)	A	B	C	D P	D T	E	E	F	G	H	J	L	BODY MATL.	CONST. REF.
VALVE TYPE : I3001, M3003, M3005, P3004														
1/8", 1/4"	38	38	98	68	97	25	26	25	10.5	16	M6	50	AL, BR	902
3/8", 1/2"	60	38	106	68	97	25	26	25	20.5	20.5	M6	50	AL, BR	302
1/8", 1/4"	44	Ø48	102	68	97	25	26	25	15	11	M6	50	SS	902
3/8", 1/2"	58	Ø62	111	68	97	25	26	25	15	11	M6	50	SS	304

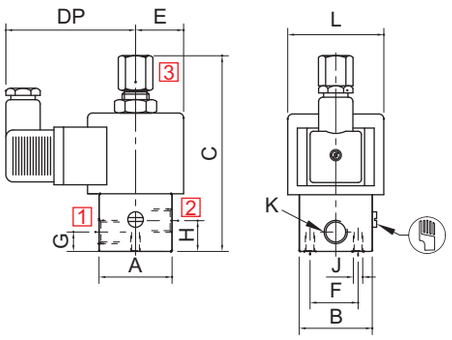

SQ. PLUG IN SOLENOID TYPE (25, 65CR)

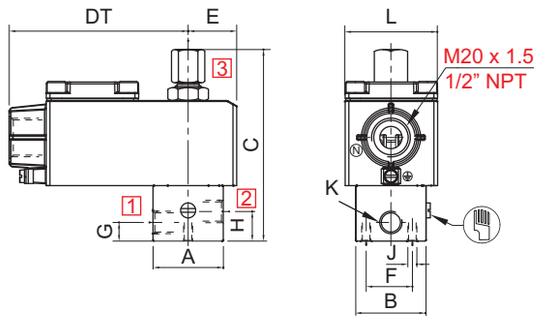

TERMINAL BOX/ Ex d ENCLOSURE (16, 19, 37, 39, 58, 58LT, 67)

K (Port Size)	A	B	C	D P	D T	E	E	F	G	H	J	L	BODY MATL.	CONST. REF.
VALVE TYPE : I3002, M3004, P3002														
1/8", 1/4"	38	38	98	66	97	25	26	25	10.5	16	M6	50	AL, BR	309
3/8", 1/2"	60	38	106	66	97	25	26	25	20.5	20.5	M6	50	AL, BR	310
1/8", 1/4"	44	Ø48	102	66	97	25	26	25	15	11	M6	50	SS	311
3/8", 1/2"	58	Ø62	111	66	97	25	26	25	15	11	M6	50	SS	312

ROTEX
Engineering For The Future

3 PORT SOLENOID VALVE

DIMENSIONS

All Dimensions are in mm

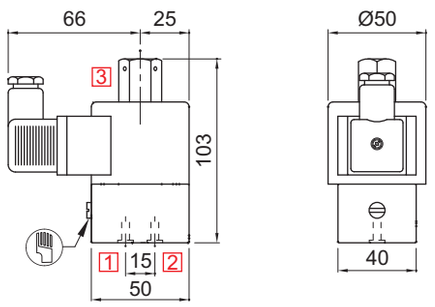

SQ. PLUG IN SOLENOID TYPE (25, 65CR)

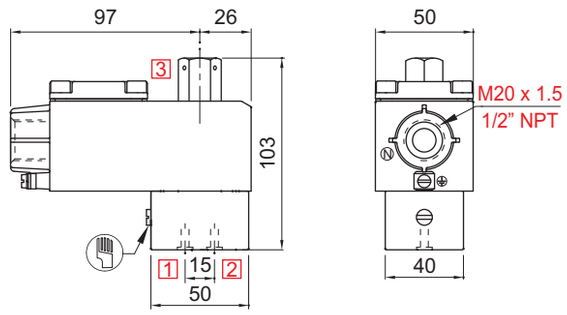

TERMINAL BOX/ Ex d ENCLOSURE (16, 19, 37, 39, 58, 58LT, 67)

VALVE TYPE : I3006

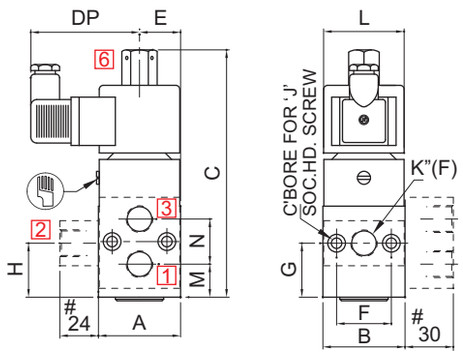

SQ. PLUG IN SOLENOID TYPE (25, 65CR)

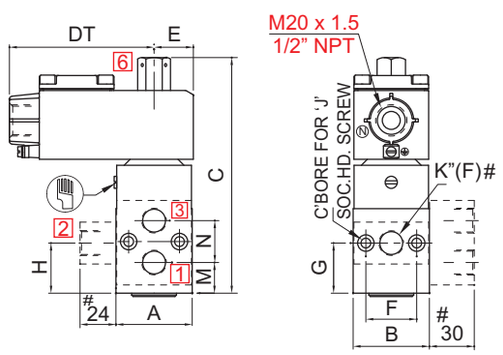

TERMINAL BOX/ Ex d ENCLOSURE (16, 19, 37, 39, 58, 58LT, 67)

NW	K (Port Size)	A	B	C	D T	D P	E	F	G	H	J	L	M	N	CONST. REF.
VALVE TYPE : I3003V01, I3004V01, I3005V01, M3001V01, M3002V01,M3008, M3009, M3010, M3011V01, M3012, M3013, P3001V01, P3003V01, P3006V01, P3007V01, P3008V01, P3009V01															
7	1/4"	51	51	154	97	68	26	34	34	34	M6	50	21	25	914
10	3/8"	61	61	168	97	68	30	34	36	36	M6	50	23	27	915
16	1/2"	81	81	191	97	68	40	50	48	48	M6	50	30	36	916
7	3/8", 1/2"	51	51	154	97	68	26	34	34	34	M6	50	21	25	917

CONSTRUCTION REFERENCE : 337

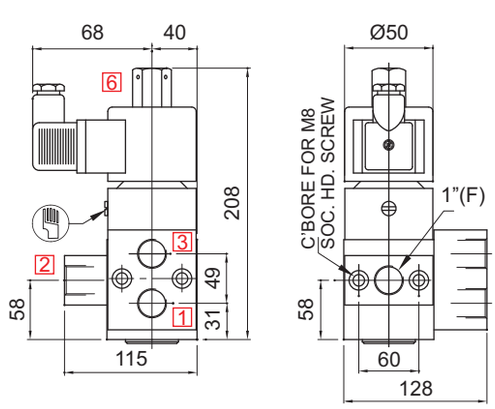

SQ. PLUG IN SOLENOID TYPE (25, 65CR)

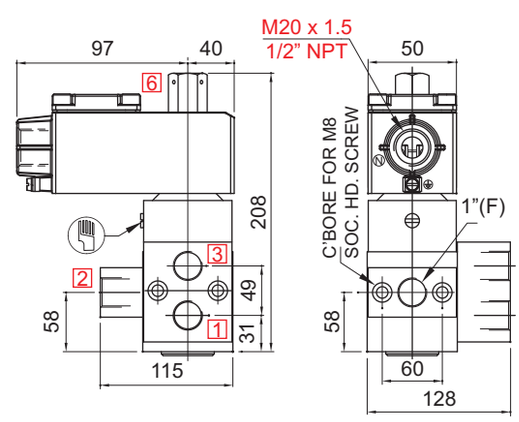

TERMINAL BOX/ Ex d ENCLOSURE (16, 19, 37, 39, 58, 58LT, 67)

VALVE TYPE : I3003V01, I3004V01, I3005V01, M3001V01, M3002V01, M3008, M3009, M3010, M3011V01, M3012, M3013, P3001V01, P3003V01, P3006V01, P3007V01, P3008V01, P3009V01

Specifications are subject to change without notice

3 PORT SOLENOID VALVE

DIMENSIONS

All Dimensions are in mm

CONSTRUCTION REFERENCE : 323

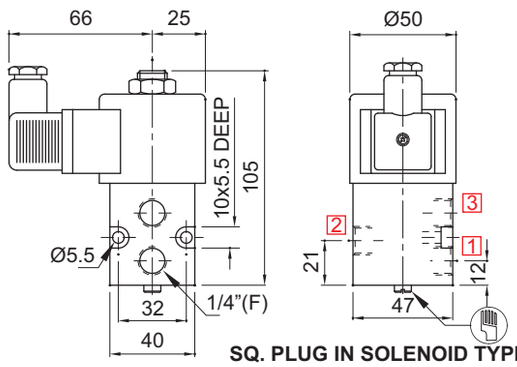

SQ. PLUG IN SOLENOID TYPE (25, 65CR)

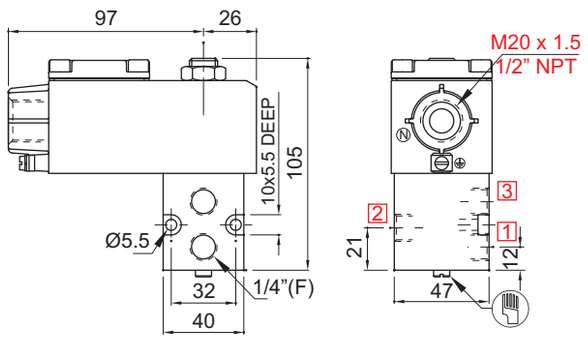

TERMINAL BOX/ Ex d ENCLOSURE (16, 19, 37, 39, 58, 58LT, 67)

VALVE TYPE : P3005

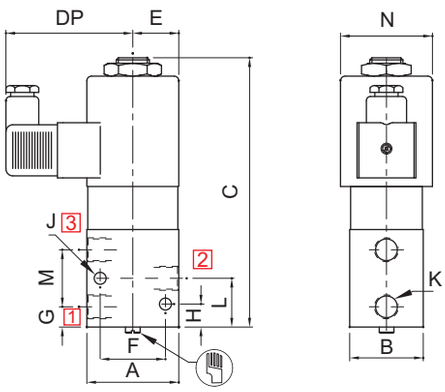

SQ. PLUG IN SOLENOID TYPE (25, 65CR)

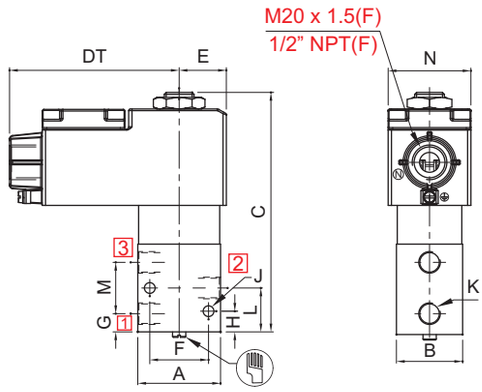

TERMINAL BOX/ Ex d ENCLOSURE (16, 19, 37, 39, 58, 58LT, 67)

NW	K (Port Size)	A	B	C	D T	D P	E	E	F	G	H	J	L	M	N	CONST. REF.
VALVE TYPE : M3007																
10	3/8", 1/2"	60	50	158	103	68	30	30	38	17	19	6.5	35	36	50	930

CONSTRUCTION REFERENCE : 336

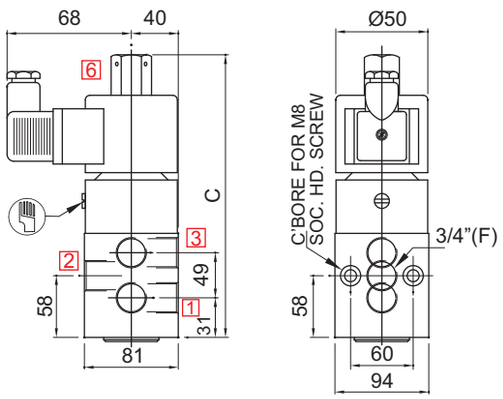

SQ. PLUG IN SOLENOID TYPE (25, 65CR)

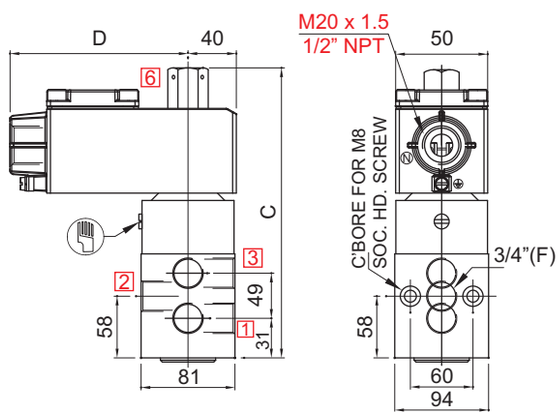

TERMINAL BOX/ Ex d ENCLOSURE (16, 19, 37, 39, 58, 58LT, 67)

VALVE TYPE : I3003, I3004, I3005, M3001, M3002,M3008, M3009, M3010, M3011, M3012, M3013, P3001, P3003, P3006, P3007, P3008, P3009

Specifications are subject to change without notice

ROTEX
Engineering For The Future

3 PORT SOLENOID VALVE

DIMENSIONS

All Dimensions are in mm

CONSTRUCTION REFERENCE : 1017

VALVE TYPE : L3004

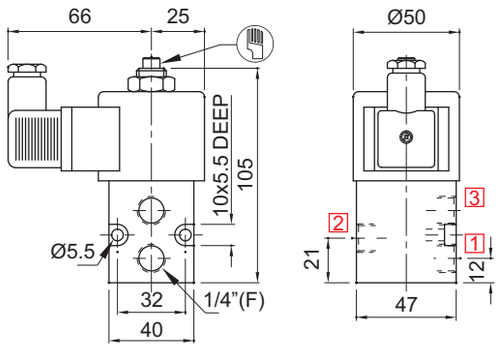

SQ. PLUG IN SOLENOID TYPE (25, 65CR)

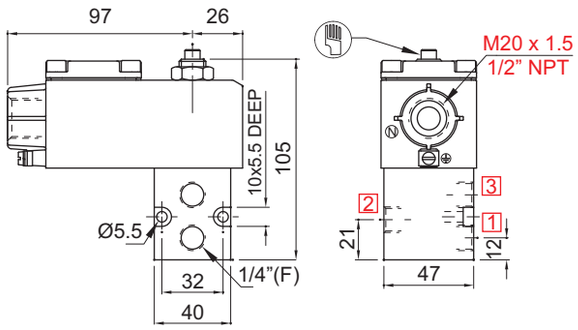

TERMINAL BOX/ Ex d ENCLOSURE (16, 19, 37, 39, 58, 58LT, 67)

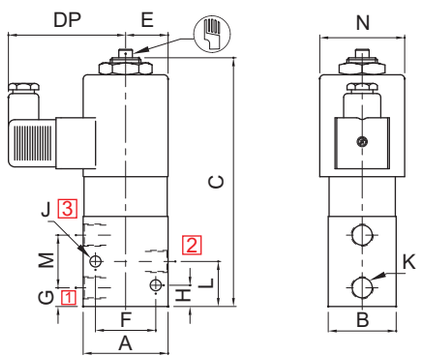

SQ. PLUG IN SOLENOID TYPE (25, 65CR)

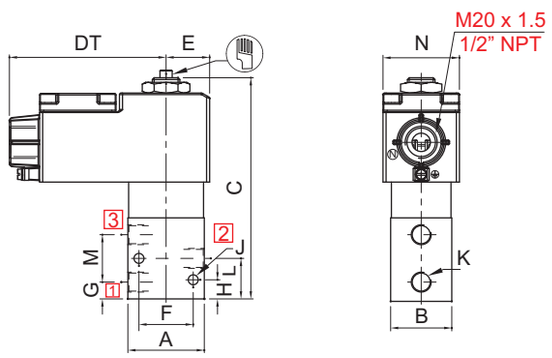

TERMINAL BOX/ Ex d ENCLOSURE (16, 19, 37, 39, 58, 58LT, 67)

NW	K (Port Size)	A	B	C	D T	D P	E	F	G	H	J	L	M	N	CONST. REF.
VALVE TYPE : L3005V01															
7	1/4", 3/8"	50	40	146	103	68	29	36	11	13	6.5	27	31	50	1018
10	3/8", 1/2"	60	50	158	103	68	30	38	17	19	6.5	35	36	50	1019

CONSTRUCTION REFERENCE : 1014

VALVE TYPE : L3017

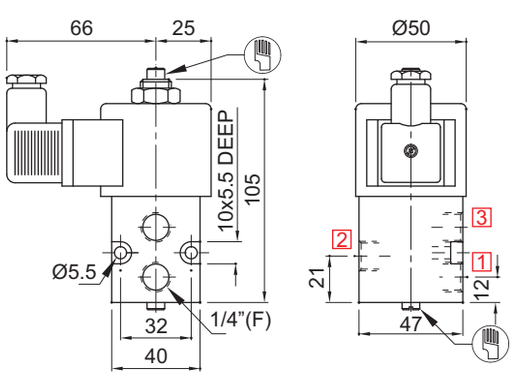

SQ. PLUG IN SOLENOID type (25, 65CR)

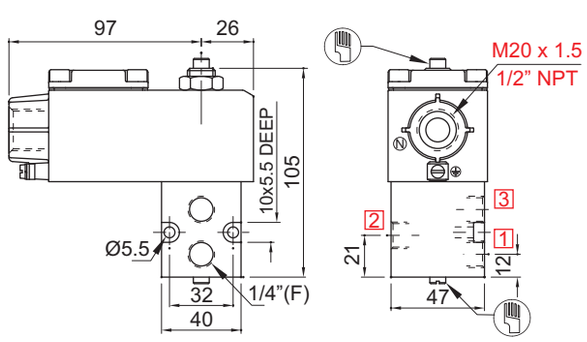

TERMINAL BOX/ Ex d ENCLOSURE (16, 19, 37, 39, 58, 58LT, 67)

Specifications are subject to change without notice

3 PORT SOLENOID VALVE

DIMENSIONS

All Dimensions are in mm

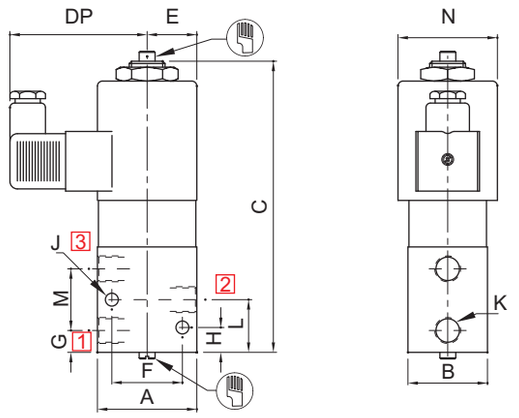

SQ. PLUG IN SOLENOID TYPE (25, 65CR)

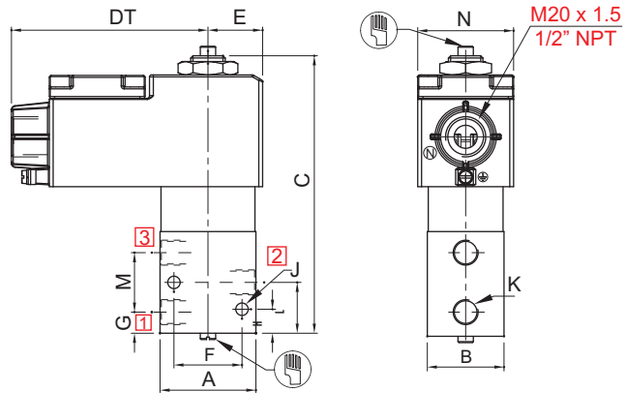

TERMINAL BOX/ Ex d ENCLOSURE (16, 19, 37, 39, 58, 58LT, 67)

NW	K (Port Size)	A	B	C	C	D P	D T	E	E	F	G	H	J	L	M	N	CONST. REF.
VALVE TYPE : L3018																	
7	1/4", 3/8"	50	40	146	146	68	103	25	29	36	11	13	6.5	27	31	50	1015
10	3/8", 1/2"	60	50	160	158	68	103	30	30	38	17	19	6.5	35	36	50	1016

CONSTRUCTION REFERENCE : 343

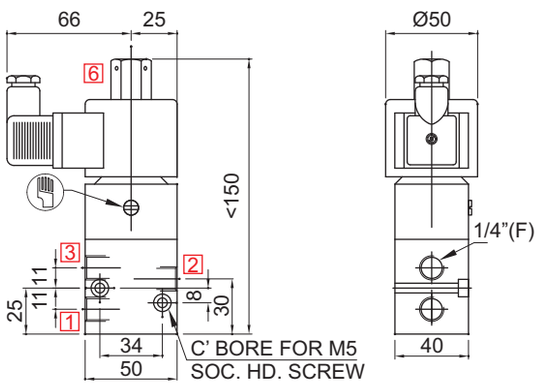

SQ. PLUG IN SOLENOID TYPE (25, 65CR)

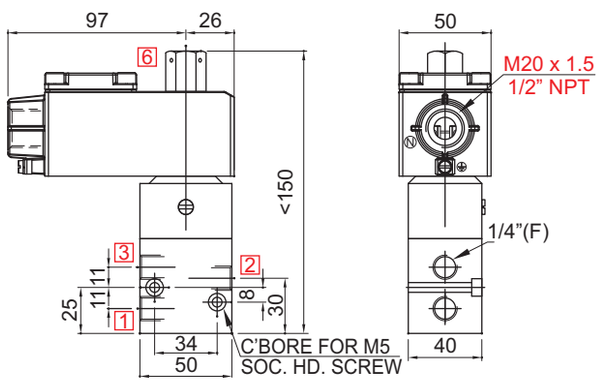

TERMINAL BOX/ Ex d ENCLOSURE (16, 19, 37, 39, 58, 58LT,67)

VALVE TYPE : I3003, I3004, I3005, M3001, M3002,M3008, M3009, M3010, M3011, M3012, M3013, P3001, P3003, P3006, P3007, P3008, P3009

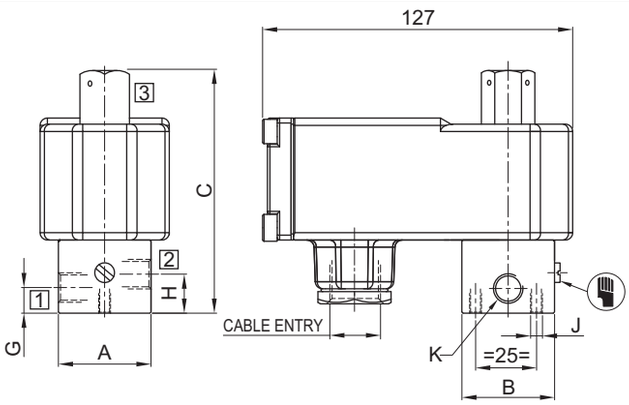

Ex ia SOLENOID WITH BOOSTER CIRCUIT (66)

K (Port Size)	A	B	C	G	H	J	L	BODY MATL.	CONST. REF.
VALVE TYPE : 30125									
1/8", 1/4"	38	38	129	10.5	16	M6	58	AL, BR	904
3/8", 1/2"	60	38	137	20.5	20.5	M6	58	AL, BR	905
1/8", 1/4"	44	Ø48	133	15	11	M6	58	SS	906
3/8", 1/2"	58	Ø62	142	15	11	M6	58	SS	907

Specifications are subject to change without notice

3 PORT SOLENOID VALVE

DIMENSIONS

All Dimensions are in mm

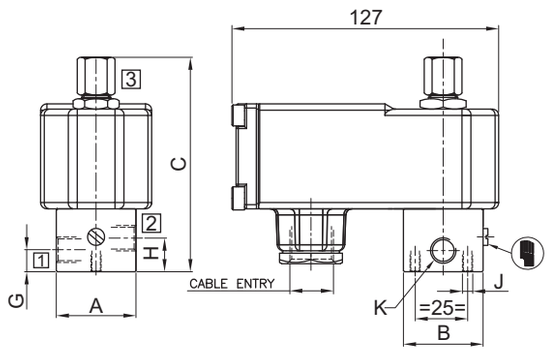

Ex ia SOLENOID WITH BOOSTER CIRCUIT (66)

K (Port Size)	A	B	C	G	H	J	BODY MATL.	CONST. REF.
VALVE TYPE : 30201								
1/8", 1/4"	38	38	122	10.5	16	M6	AL, BR	908
3/8", 1/2"	60	38	130	20.5	20.5	M6	AL, BR	909
3/8", 1/2"	44	Ø48	126	15	11	M6	SS	910
3/8", 1/2"	58	Ø62	135	15	11	M6	SS	911

10

CONSTRUCTION REFERENCE : 1020

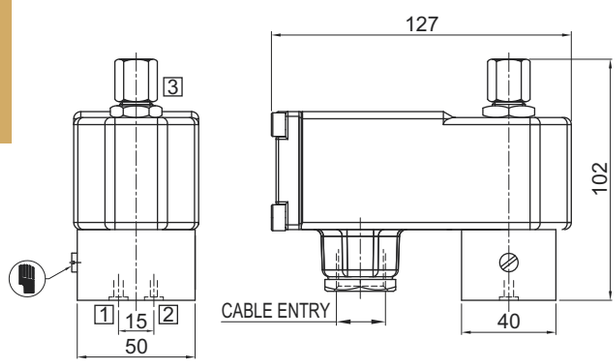

Ex ia SOLENOID WITH BOOSTER CIRCUIT (66)

CONSTRUCTION REFERENCE : 924

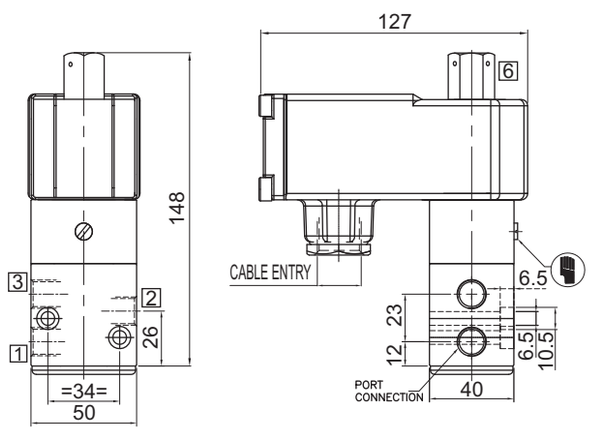

Ex ia SOLENOID WITH BOOSTER CIRCUIT (66)

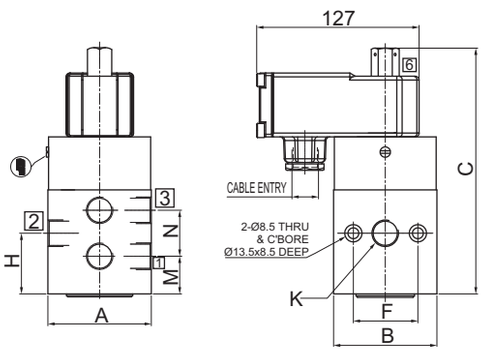

Ex ia SOLENOID WITH BOOSTER CIRCUIT (66)

NW	K (Port Size)	A	B	C	E	F	G	H	J	M	N	CONST. REF.
VALVE TYPE : 31119, 31120, 31209, 31210												
7	1/4"	51	51	182	28	34	34	34	M6	21	25	925
10	3/8"	61	61	196	30	34	36	36	M6	23	27	926
16	1/2"	81	81	219	40	50	48	48	M8	30	36	927

Specifications are subject to change without notice

3 PORT SOLENOID VALVE

DIMENSIONS

All Dimensions are in mm

CONSTRUCTION REFERENCE : 1021

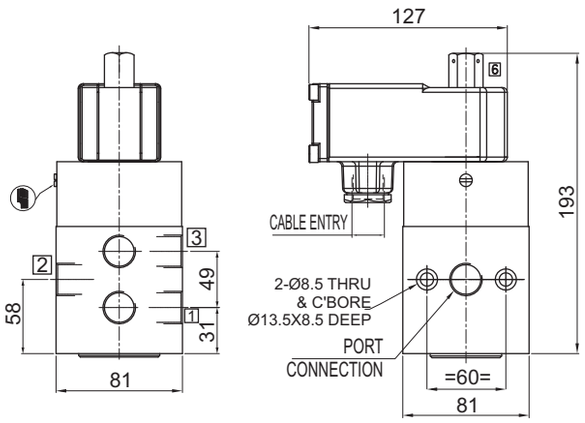

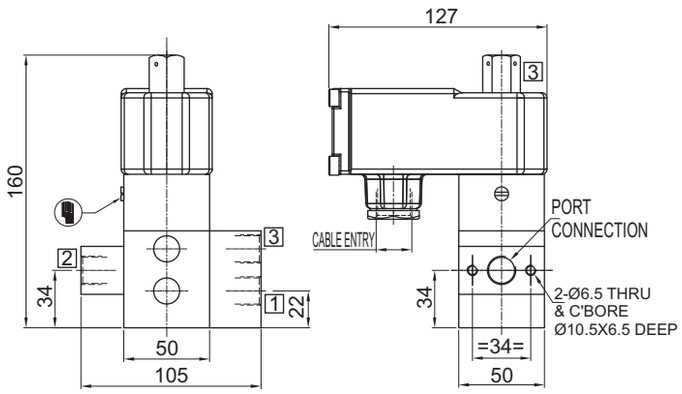

Ex ia SOLENOID WITH BOOSTER CIRCUIT (66)

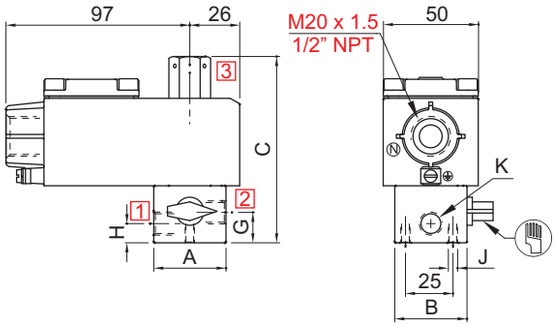

TERMINAL BOX/ Ex d ENCLOSURE (16, 19, 37, 39, 58, 58LT, 67)

K (Port Size)	A	B	C	G	H	J	BODY MATL.	CONST. REF.
VALVE TYPE : L3003, L3009								
1/8", 1/4"	38	38	98	10.5	16	M6	AL, BR	1022
3/8", 1/2"	60	38	106	20.5	20.5	M6	AL, BR	1023
1/8", 1/4"	44	Ø48	102	15	11	M6	SS	1024
3/8", 1/2"	58	Ø62	111	15	11	M6	SS	1025

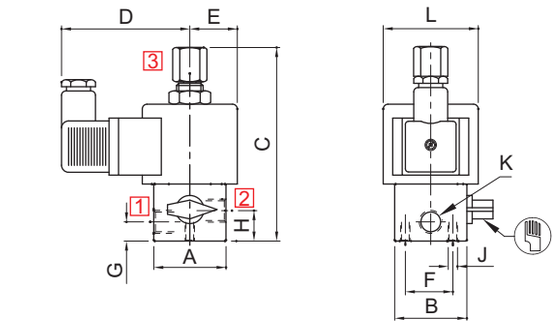

SQ. PLUG IN SOLENOID TYPE (25, 65CR)

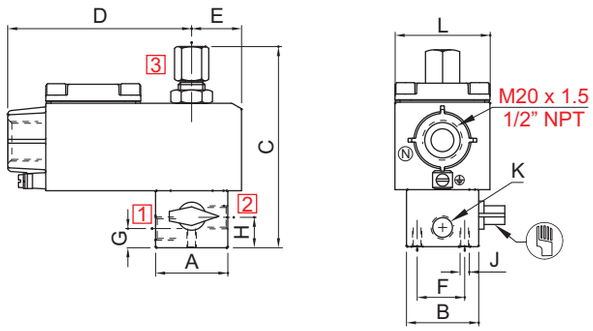

TERMINAL BOX/ Ex d ENCLOSURE (16, 19, 37, 39, 58, 58LT, 67)

K (Port Size)	A	B	C	C	D	D	E	E	F	G	H	J	L	BODY MATL.	CONST. REF.
VALVE TYPE : L3001, L3002, L3010															
1/8", 1/4"	38	38	98	98	66	97	25	26	25	10.5	16	M6	50	AL, BR	912
3/8", 1/2"	60	38	100	106	66	97	25	26	25	20.5	20.5	M6	50	AL, BR	1026
1/8", 1/4"	44	Ø48	102	102	66	97	25	26	25	15	11	M6	50	SS	912
3/8", 1/2"	58	Ø62	111	111	66	97	25	26	25	15	11	M6	50	SS	1027
VALVE TYPE : L3015															
1/8", 1/4"	50	50	124	124	68	103	25	28	25	10.5	17	M6	50	AL, BR	1028
3/8", 1/2"	65	50	124	124	68	103	25	28	25	14	14	M6	50	AL, BR	1029
1/4"	44	Ø48	102	102	68	103	25	28	25	15	11	M6	50	SS	1030
1/2"	58	Ø62	111	111	68	103	25	28	25	15	11	M6	50	SS	1031

ROTEX
Engineering For The Future

3 PORT SOLENOID VALVE

DIMENSIONS

All Dimensions are in mm

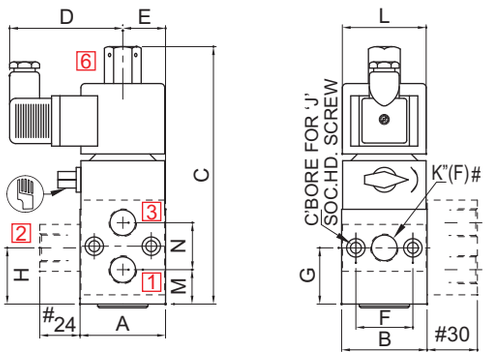

SQ. PLUG IN SOLENOID TYPE (25, 65CR)

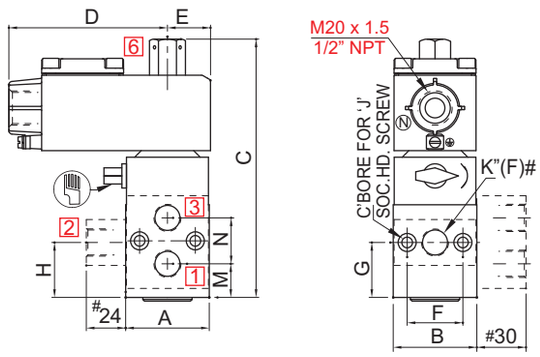

TERMINAL BOX/ Ex d ENCLOSURE (16, 19, 37, 39, 58, 58LT, 67)

10

NW	K (Port Size)	A	B	C	D	D	E	E	F	G	H	J	L	M	N	CONST. REF.
VALVE TYPE : L3006, L3007, L30012, L3013, L3014, L3016, L3019, L3020																
7	1/4"	51	51	154	68	97	25	26	34	34	34	M6	50	21	25	918
10	3/8"	61	61	168	68	97	30	30	34	36	36	M6	50	23	27	919
16	1/2"	81	81	191	68	97	40	40	50	48	48	M8	50	30	36	920
7	3/8", 1/2"	51	51	154	68	97	25	26	34	34	34	M6	50	21	25	921

CONSTRUCTION REFERENCE : 1032

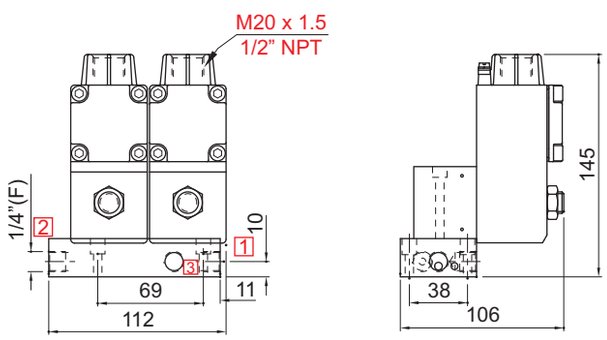

TERMINAL BOX/ Ex d ENCLOSURE (16, 19, 37, 39, 58, 58LT)

VALVE TYPE : 30127, 30127LW3.5

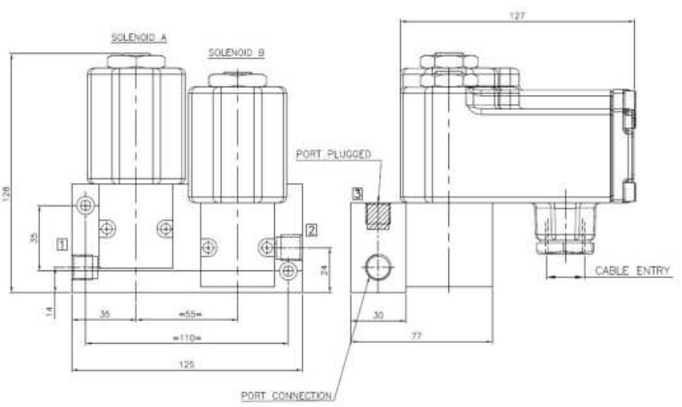

VALVE TYPE : 30127LW1.8 SOLENOID TYPE (62, 17, 87)

VALVE TYPE : 30127, 30127LW3.5 SOLENOID TYPE (17, 87)

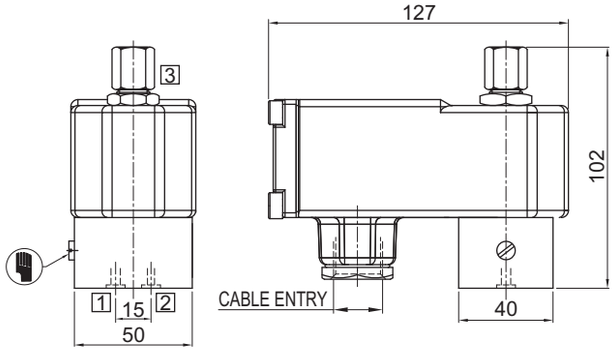

Ex ia SOLENOID WITH BOOSTER CIRCUIT (66)

VALVE TYPE : 30111, 30211, 30311

Specifications are subject to change without notice

3 PORT SOLENOID VALVE

DIMENSIONS

All Dimensions are in mm

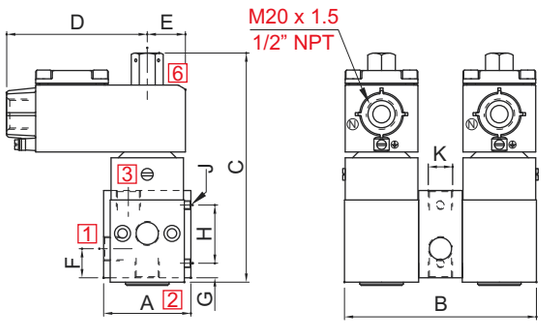

TERMINAL BOX/ Ex d ENCLOSURE (16, 19, 37, 39, 58, 58LT, 67)

NW	K (Port Size)	A	B	C	D	E	F	G	H	J	CONST. REF.
VALVE TYPE : 51421											
6	1/4"	60	132	158	97	26	20	10	40	M6	939
10	3/8"	61	152	169	97	26	20	10	40	M6	940
16	1/2"	81	147	191	97	26	20	15	50	M8	941

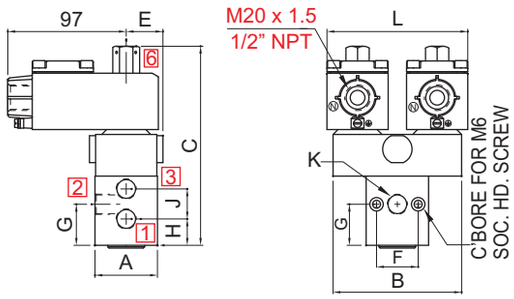

TERMINAL BOX/ Ex d ENCLOSURE (16, 19, 37, 39, 58, 58LT, 67)

NW	K (Port Size)	A	B	C	E	F	G	H	J	L	CONST. REF.
VALVE TYPE : 31115											
6	1/4"	51	105	159	30	34	34	21	25	115	942
10	3/8"	61	115	174	35	34	36	23	27	125	943
16	1/2"	81	125	196	40	50	48	30	36	135	944

ROTEX
Engineering For The Future

5 PORT SOLENOID VALVE

DIMENSIONS

All Dimensions are in mm

CONSTRUCTION REFERENCE : 500

VALVE TYPE : I5001, M5001, M5005, P5001, P5007

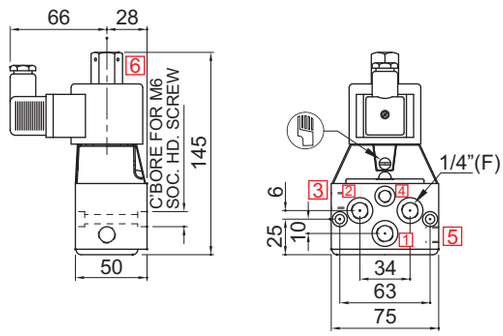

SQ. PLUG IN SOLENOID TYPE (25, 65CR)

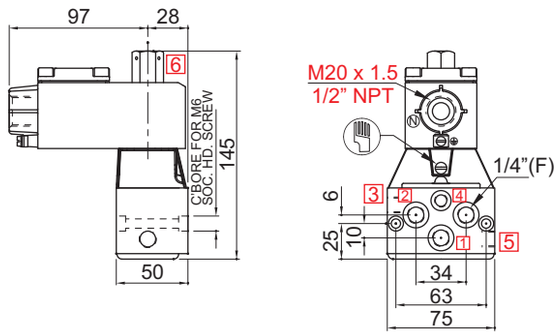

TERMINAL BOX/ Ex d ENCLOSURE (16, 19, 37, 39, 58, 58LT, 67)

10

CONSTRUCTION REFERENCE : 501

VALVE TYPE : I5001, M5001, M5005, P5001, P5007

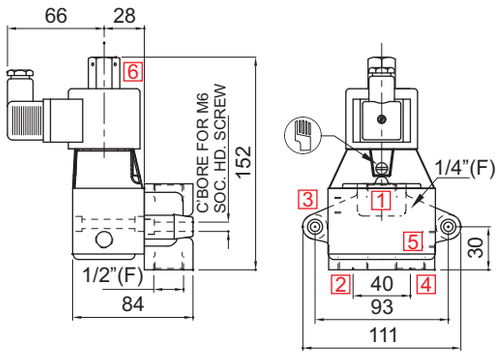

SQ. PLUG IN SOLENOID TYPE (25, 65CR)

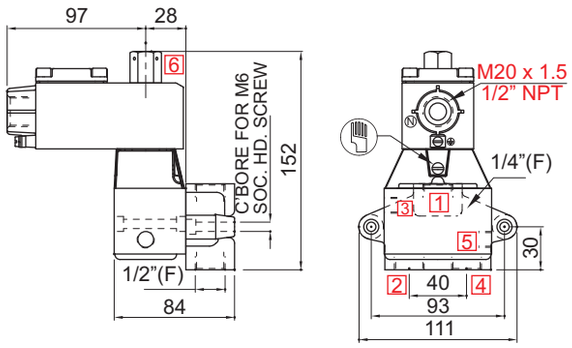

TERMINAL BOX/ Ex d ENCLOSURE (16, 19, 37, 39, 58, 58LT, 67)

CONSTRUCTION REFERENCE : 516

VALVE TYPE : I5002, P5004, P5008

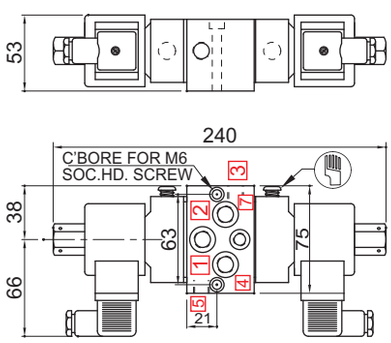

SQ. PLUG IN SOLENOID TYPE (25, 65CR)

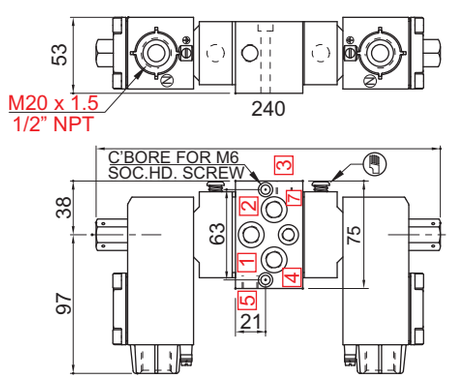

TERMINAL BOX/ Ex d ENCLOSURE (16, 19, 37, 39, 58, 58LT, 67)

Specifications are subject to change without notice

5 PORT SOLENOID VALVE

DIMENSIONS

All Dimensions are in mm

CONSTRUCTION REFERENCE : 518

VALVE TYPE : I5001, P5004, P5008

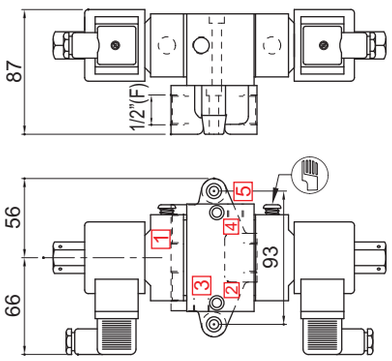

SQ. PLUG IN SOLENOID TYPE (25, 65CR)

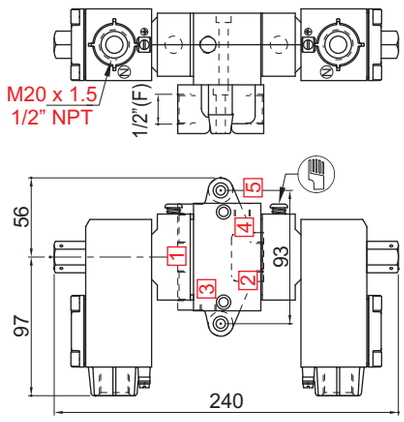

TERMINAL BOX/ Ex d ENCLOSURE (16, 19, 37, 39, 58, 58LT, 67)

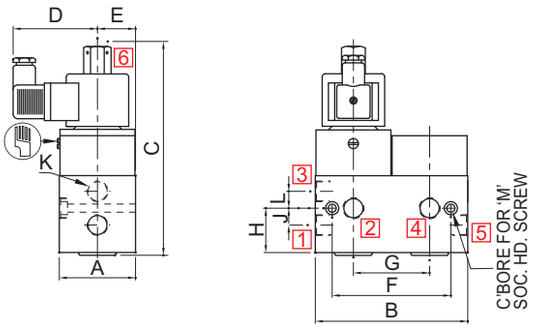

SQ. PLUG IN SOLENOID TYPE (25, 65CR)

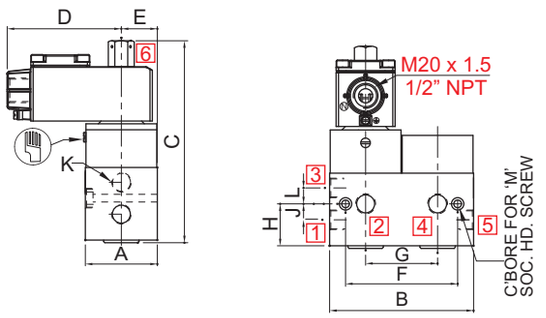

TERMINAL BOX/ Ex d ENCLOSURE (16, 19, 37, 39, 58, 58LT, 67)

NW	K (Port Size)	A	B	C	D	D	E	F	G	H	J	L	M	CONST. REF.
VALVE TYPE : I5003V01, M5002, M5006, P5002V01, P5009V01														
10	3/8"	61	122	171	68	97	30.5	95	61	35.5	13.5	13.5	M6	502
16	1/2"	81	165	201	68	97	40.5	145	81	47.5	18	18	M8	503
20	3/4"	81	165	210	68	97	40.5	145	81	57.5	26	23	M8	504

CONSTRUCTION REFERENCE : 508

VALVE TYPE : I5003V01, M5002, M5006, P5002V01, P5009V01

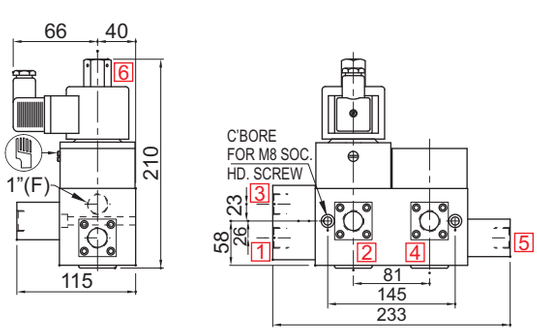

SQ. PLUG IN SOLENOID TYPE (25, 65CR)

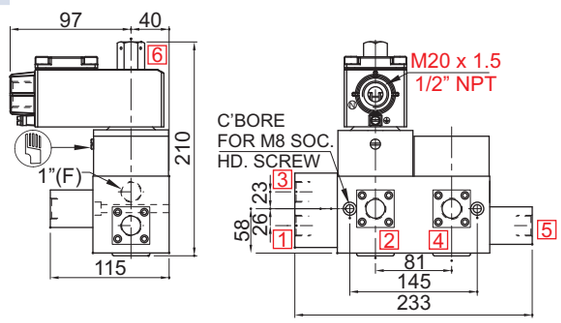

TERMINAL BOX/ Ex d ENCLOSURE (16, 19, 37, 39, 58, 58LT, 67)

Specifications are subject to change without notice

ROTEX
Engineering For The Future

5 PORT SOLENOID VALVE

DIMENSIONS

All Dimensions are in mm

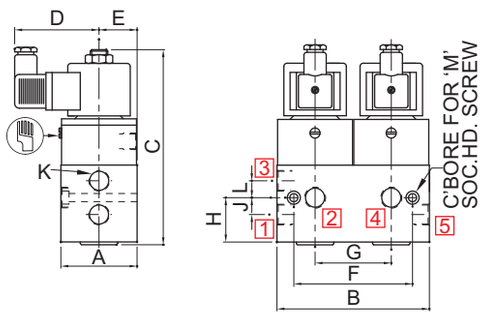

SQ. PLUG IN SOLENOID TYPE (25, 65CR)

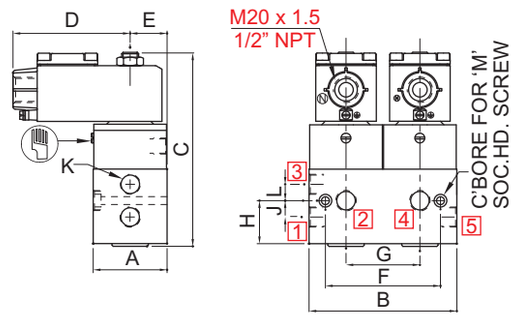

TERMINAL BOX/ Ex d ENCLOSURE (16, 19, 37, 39, 58, 58LT, 67)

10

NW	K (Port Size)	A	B	C	D	D	E	F	G	H	J	L	M	CONST. REF.
VALVE TYPE : I5004, P5005, P5010														
10	3/8"	61	122	160	68	97	30.5	95	61	35.5	13.5	13.5	M6	968
16	1/2"	81	165	191	68	97	40.5	145	81	47.5	18	18	M8	969
20	3/4"	81	165	210	68	97	40.5	145	81	57.5	26	23	M8	522

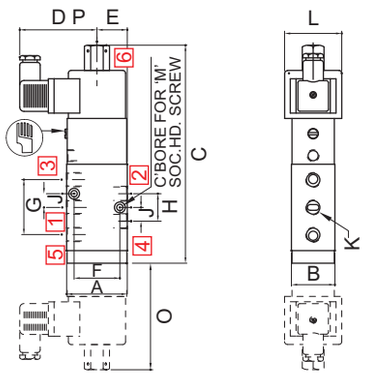

SQ. PLUG IN SOLENOID TYPE (25, 65CR)

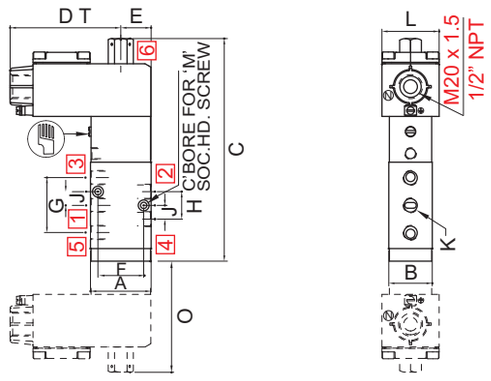

TERMINAL BOX/ Ex d ENCLOSURE (16, 19, 37, 39, 58, 58LT, 67)

NW	K (Port Size)	A	B	C	D P	D T	E	F	G	H	J	L	M	O	CONST. REF.
VALVE TYPE : I5005, I5005V01, M5003, M5004															
6	1/4"	53	38	195	66	97	27	40	48	24	12	50	M6	-	972
16	1/2"	75	45	235	66	97	38	50	72	36	18	50	M6	-	973
25	1"	110	65	285	66	97	55	80	112	56	28	50	M8	-	974
VALVE TYPE : I5006, I5006V01, P5006, P5012															
6	1/4"	53	38	195	66	97	27	40	48	24	12	50	M6	94	975
16	1/2"	75	45	235	66	97	38	50	72	36	18	50	M6	97	976
25	1"	110	65	285	66	97	55	80	112	56	28	50	M8	101	977

Specifications are subject to change without notice

5 PORT SOLENOID VALVE

DIMENSIONS

All Dimensions are in mm

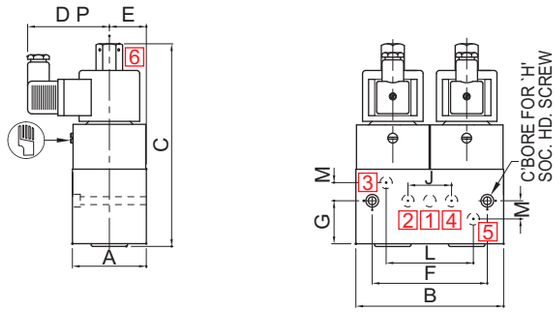

SQ. PLUG IN SOLENOID TYPE (25, 65CR)

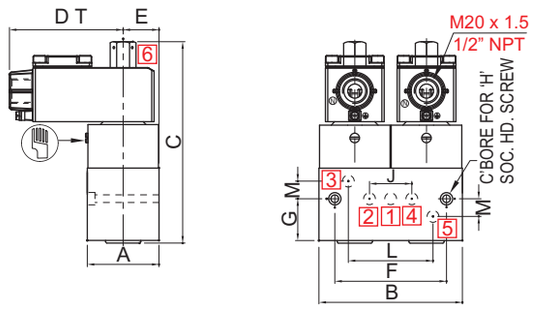

TERMINAL BOX/ Ex d ENCLOSURE (16, 19, 37, 39, 58, 58LT, 67)

NW	K (Port Size)	A	B	C	D P	D T	E	F	G	H	J	L	M	CONST. REF.
VALVE TYPE : 57404														
10	SUBBASE	61	122	171	66	97	30.5	95	35.5	M6	36	72	15	725
16	SUBBASE	81	165	201	66	97	40.5	145	40.5	M8	52	104	21	726
20	SUBBASE	81	165	210	66	97	40.5	145	40.5	M8	68	130	21	727

CONSTRUCTION REFERENCE : 1032

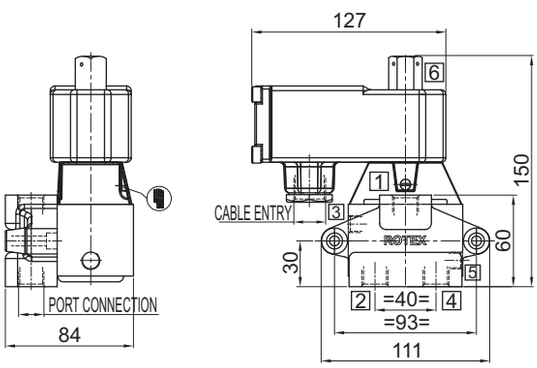

Ex ia SOLENOID WITH BOOSTER CIRCUIT (66)

CONSTRUCTION REFERENCE : 1033

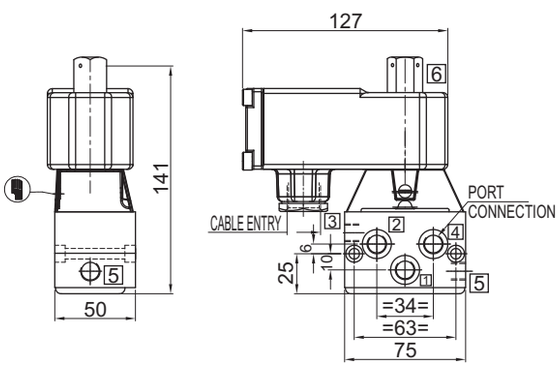

Ex ia SOLENOID WITH BOOSTER CIRCUIT (66)

CONSTRUCTION REFERENCE : 1034

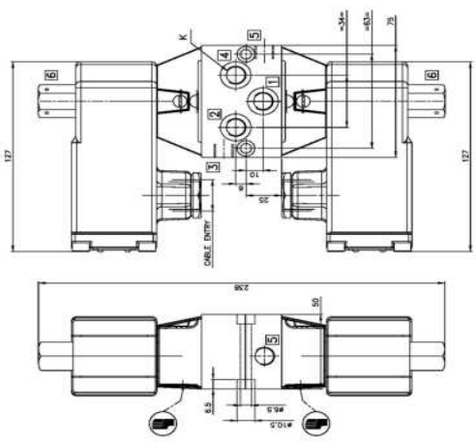

Ex ia SOLENOID WITH BOOSTER CIRCUIT

CONSTRUCTION REFERENCE : 1035

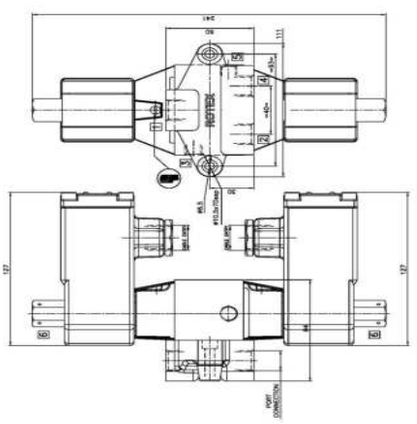

Ex ia SOLENOID WITH BOOSTER CIRCUIT

ROTEX
Engineering For The Future

5 PORT SOLENOID VALVE

DIMENSIONS

All Dimensions are in mm

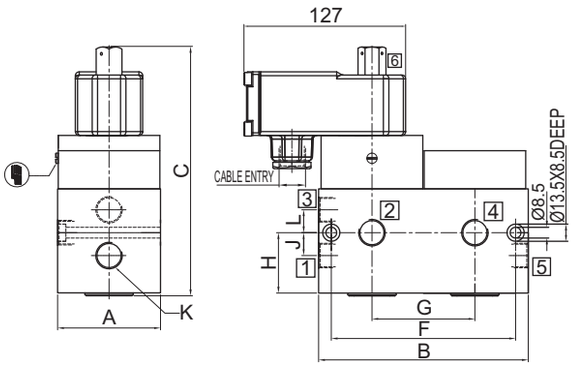

Ex ia SOLENOID WITH BOOSTER CIRCUIT (66)

NW	K (Port Size)	A	B	C	E	F	G	H	J	L	CONST. REF.
VALVE TYPE : 51432, 51433											
10	3/8”	61	122	199	30.5	95	61	35.5	13.5	13.5	956
16	1/2”	81	165	229	40.5	145	81	47.5	18	18	957
20	3/4”	81	165	238	40.5	145	81	57.5	26	23	958

10

CONSTRUCTION REFERENCE : 1036

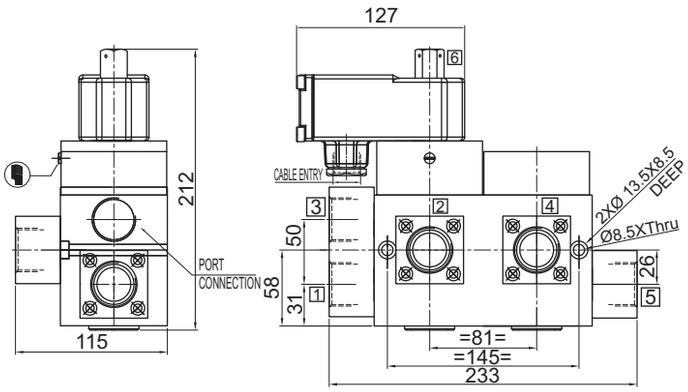

Ex ia SOLENOID WITH BOOSTER CIRCUIT (66)

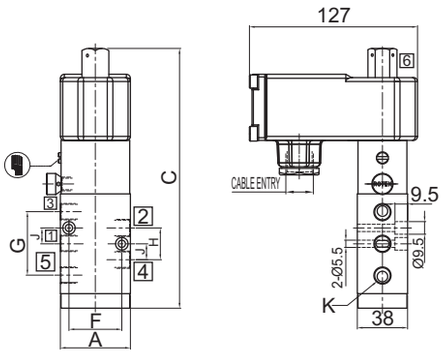

Ex ia SOLENOID WITH BOOSTER CIRCUIT (66)

NW	K (Port Size)	A	B	C	E	F	G	H	J	M	CONST. REF.
VALVE TYPE : 51440, 51441											
6	1/4”	53	38	223	28	40	48	24	12	M6	961
12	1/2”	75	45	235	38	50	72	36	18	M6	962
25	1”	110	65	285	55	80	112	56	28	M8	963

Specifications are subject to change without notice

5 PORT SOLENOID VALVE

DIMENSIONS

All Dimensions are in mm

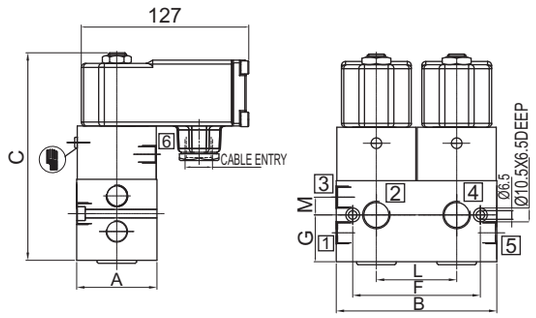

Ex ia SOLENOID WITH BOOSTER CIRCUIT (66)

NW	K (Port Size)	A	B	C	E	F	G	J	L	M	CONST. REF.
VALVE TYPE : 57404											
10	SUBBASE	61	122	199	30.5	95	35.5	36	72	15	1037
16	SUBBASE	81	165	229	40.5	145	47.5	52	104	21	1038
20	SUBBASE	81	165	238	40.5	145	57.5	68	130	21	1039

10

CONSTRUCTION REFERENCE : 1040

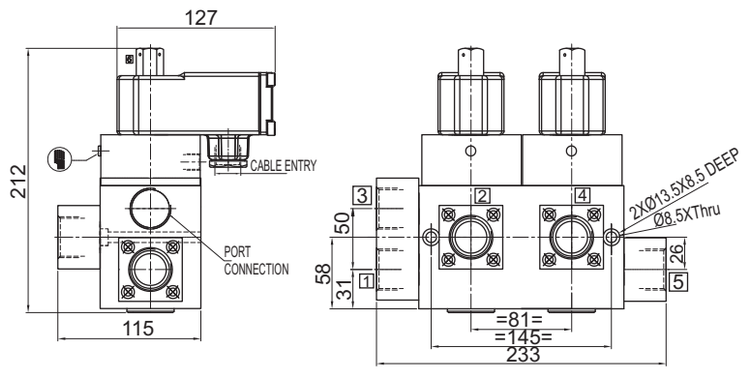

Ex ia SOLENOID WITH BOOSTER CIRCUIT

CONSTRUCTION REFERENCE : 1041-1042-1043

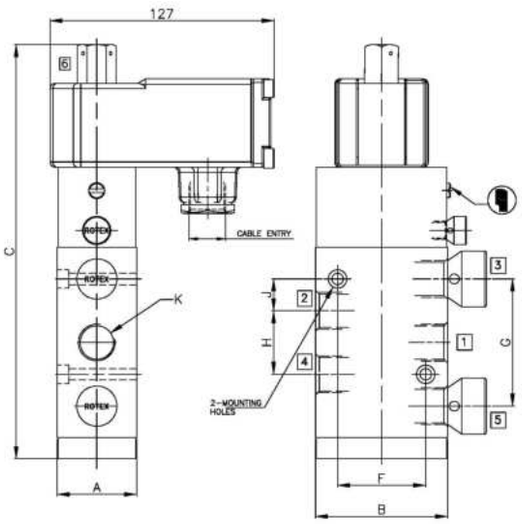

CONSTRUCTION REFERENCE : 1044-1045-1046

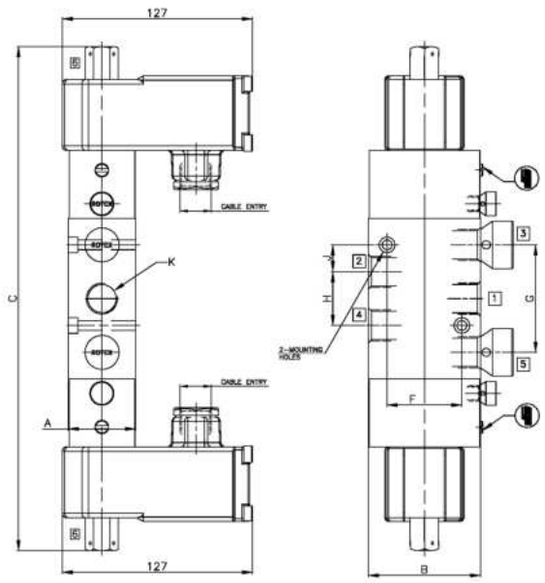

Ex ia SOLENOID WITH BOOSTER CIRCUIT (66)

NW	K (Port Size)	A	B	C	E	F	G	H	J	M	O	CONST. REF.
VALVE TYPE : 51440, 51441												
6	1/4"	53	38	223	28	40	48	24	12	M6	-	1041
16	1/2"	75	45	263	38	50	72	36	18	M6	-	1042
25	1"	110	65	313	55	80	112	56	28	M8	-	1043
VALVE TYPE : 57440, 57441												
6	1/4"	53	38	223	28	40	48	24	12	M6	122	1044
16	1/2"	75	45	263	38	50	72	36	18	M6	125	1045
25	1"	110	65	313	55	80	112	56	28	M8	129	1046

ROTEX
Engineering For The Future

5 PORT SOLENOID VALVE

DIMENSIONS

All Dimensions are in mm

CONSTRUCTION REFERENCE : 1047

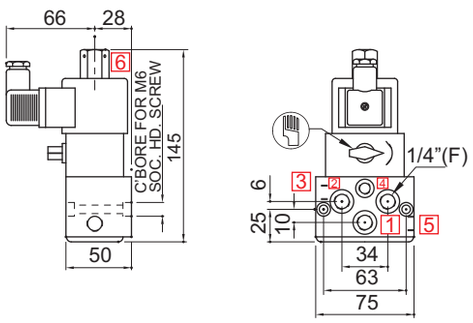

VALVE TYPE : L5004

SQ. PLUG IN SOLENOID TYPE (25, 65CR)

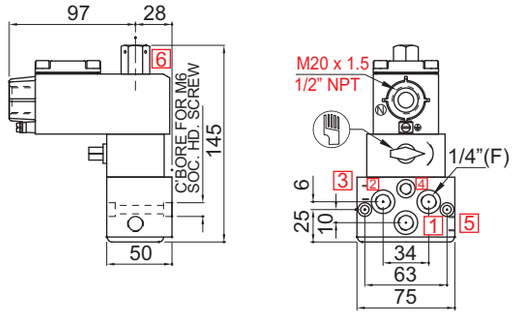

TERMINAL BOX/ Ex d ENCLOSURE (16, 19, 37, 39, 58, 58LT, 67)

10

CONSTRUCTION REFERENCE : 1048

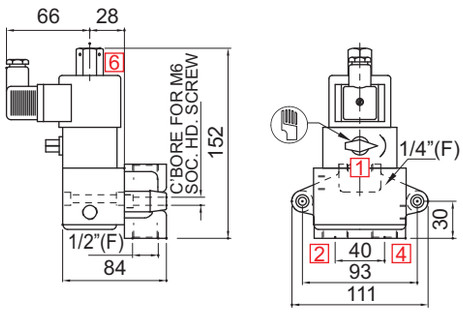

VALVE TYPE : L5004

SQ. PLUG IN SOLENOID TYPE (25, 65CR)

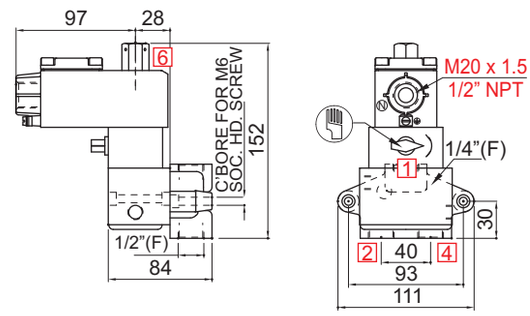

TERMINAL BOX/ Ex d ENCLOSURE (16, 19, 37, 39, 58. 58LT, 67)

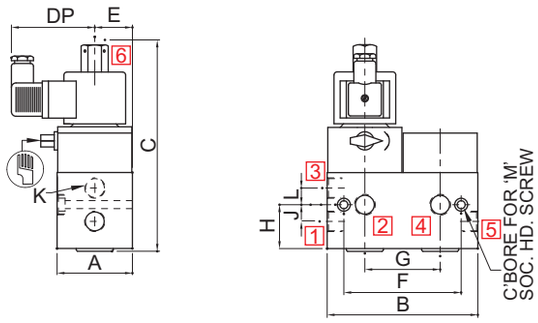

SQ. PLUG IN SOLENOID TYPE (25, 65CR)

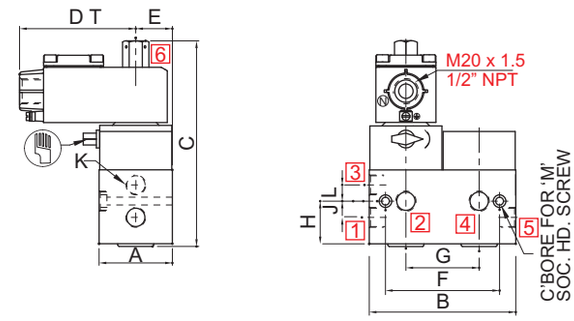

TERMINAL BOX/ Ex d ENCLOSURE (16, 19, 37, 39, 58, 58LT, 67)

NW	K (Port Size)	A	B	C	D P	D T	E	F	G	H	J	L	M	CONST. REF.
VALVE TYPE : L5005														
10	3/8"	61	122	171	68	97	30.5	95	61	35.5	13.5	13.5	M6	1049
16	1/2"	81	165	201	68	97	40.5	145	81	47.5	18	18	M8	1050
20	3/4"	81	165	210	68	97	40.5	145	81	57.5	26	23	M8	1051

Specifications are subject to change without notice

5 PORT SOLENOID VALVE

DIMENSIONS

All Dimensions are in mm

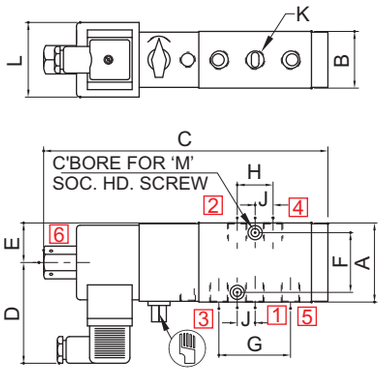

SQ. PLUG IN SOLENOID TYPE (25, 65CR)

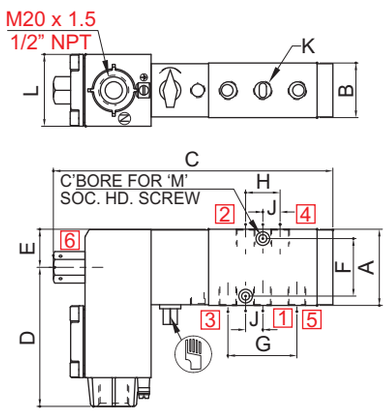

TERMINAL BOX/ Ex d ENCLOSURE (16, 19, 37, 39, 58, 58LT, 67)

10

NW	K (Port Size)	A	B	C	D	E	F	G	H	J	L	M	CONST. REF.
VALVE TYPE : L5006, L5006V01-25													
6	1/4"	53	38	195	66	27	40	48	24	12	50	M6	953
16	1/2"	75	45	235	66	38	50	72	36	18	50	M6	954
25	1"	110	65	285	66	55	80	112	56	28	50	M8	955

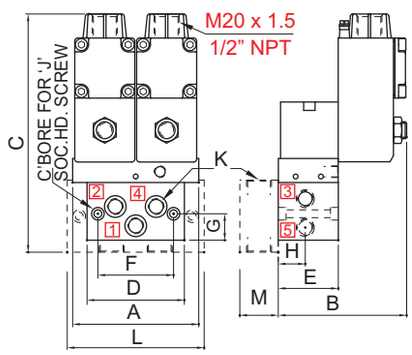

TERMINAL BOX/ Ex d ENCLOSURE (16, 19, 37, 39, 58, 58LT, 67)

NW	K (Port Size)	A	B	C	D	E	F	G	H	J	L	M	CONST. REF.
VALVE TYPE : 51427													
6	1/4"	105	106	189	81	50	63	22	22	M6	-	-	964
10	3/8"	105	106	199	81	50	93	22	22	M6	113	30	965
16	1/2"	105	106	199	81	50	93	22	22	M6	113	30	966

5 PORT SOLENOID VALVE

CONSTRUCTION REFERENCE 1043A

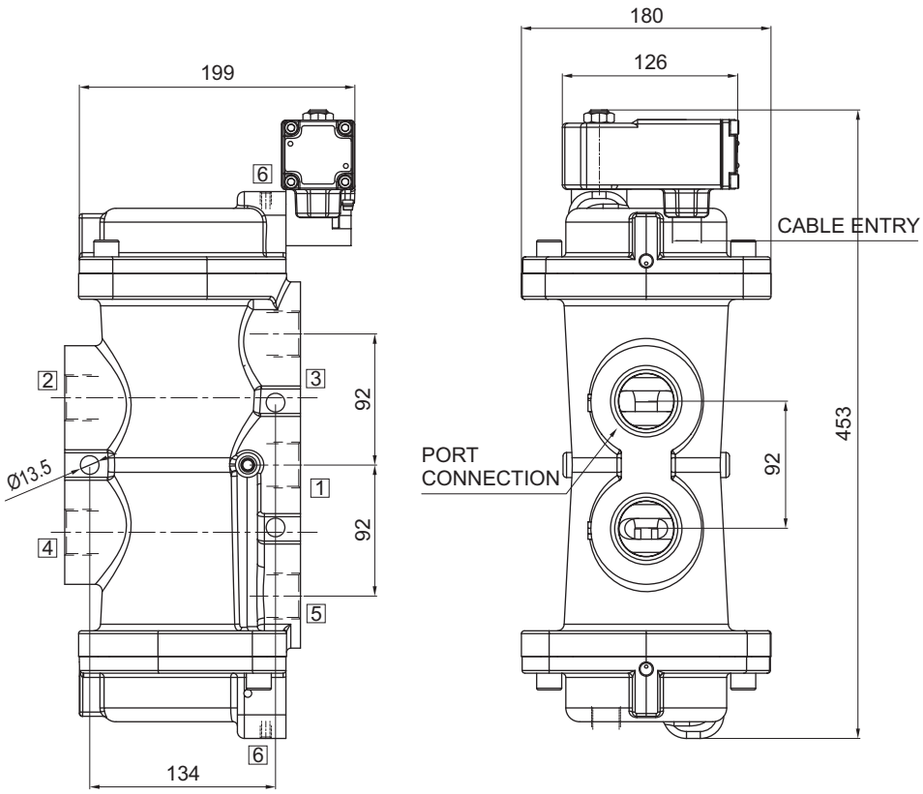

CONSTRUCTION REFERENCE 1044A

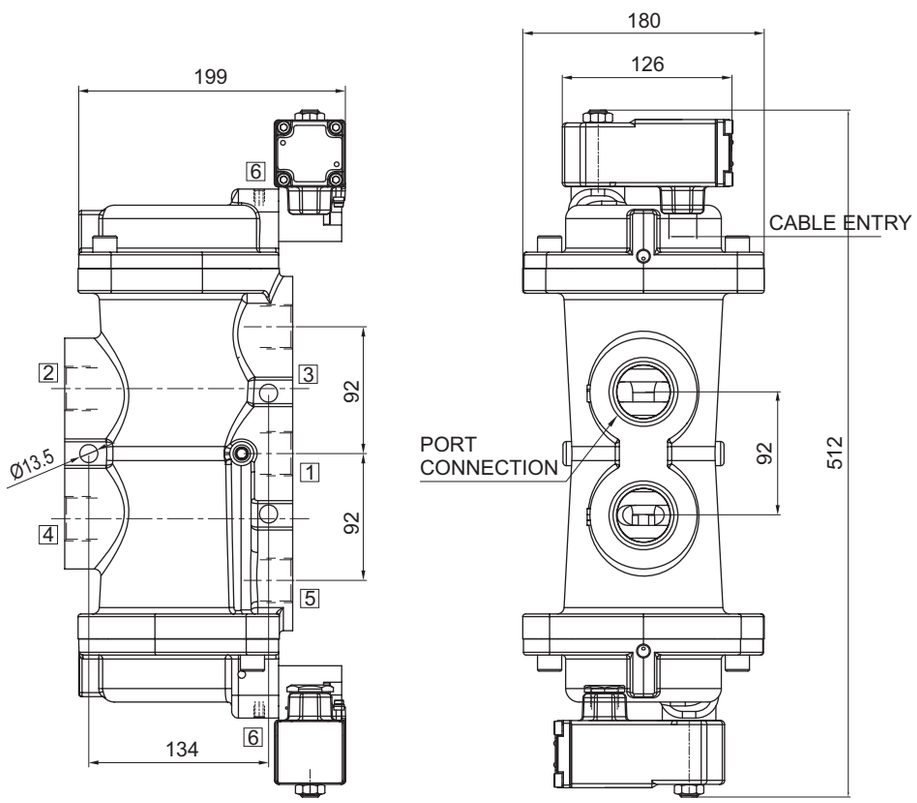

CUSTOMIZED PRODUCTS

Constant innovation at ROTEX with dedicated team of engineers for new design, development and product validation has resulted into Rotex developing and supplying many Solenoid Valves designed to meet a specific requirement for the application.

In this chapter some of the valves developed by ROTEX and now widely in use are listed.

Such ROTEX valves are initially developed for a customer, by customizing design, or modifying specification of the existing valves to meet the application.

Over a time some of them have become a widely accepted product.

Rotex have developed valves for Compressor loading/ unloading, operating air canons fitted in silo of cement plants, automating LPG gas control in digital house control, various valves for operating centrifuge machine, nuclear power plant, coal fired boiler operation, tyre inflation, vending of aerated liquid (SODA) and concentrates, dispensing of LPG, Petrol, railway electric, diesel locomotives, EMU etc;

Specially developed valves for specific applications are also listed on pages 436 to 440

PLEASE CONTACT ROTEX FOR YOUR SPECIAL REQUIREMENT OF VALVES.

APPLICATION	PAGE NO.
Dispensing	280
Dual Orifice LPG Dispensing	286
Dual Orifice Petrol (Fuel) Dispensing	287
Hot Water	300-301
Carbonated Water (Soda)	298
Digital Control Valve for Gantary/ Terminal Automation	288-291
Air Blaster for Steel, Cement Plants	294-295
Valves and Manifold for Sugar Industry	292-293
Tyre Inflation Valve	296-297
Compressor loading/ unloading Solenoid Valve	302-303
Quick acting Valve	299
2,3 Port valve with timer	304
NAMUR	305-340
Bag filter/ Dust. Collector/ Pulse jet valve	341-377
Gas over oil Control cabinet and valve	378-390

ROTEX
Engineering For The Future

2/2 DUAL FLOW SOLENOID VALVE FOR LPG DISPENSING

TYPE	PRESSURE

TYPE	PRESSURE

TYPE	PRESSURE
24110	0.5 - 25 bar

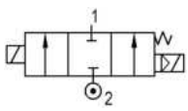

FEATURES

- Bubble tight shut off
- Mounts in any position
- Vibration resistance up to 9g
- Suitable for high speed cycling
- Speed up to 600 cycles/ min
- Life >10 million cycles

S M



OPTION

Body Material	Aluminium Cast
Orifice	12/ 25/ 40/ 50
Connection	-
Media	-
Seal	Viton
Voltage	Any
Current	Any
Enclosure	Weather Proof
Solenoid Size	14
Extended Application	Dispensing of Oil, Water,
	Fuel in Precise Quantity
	Dispensing of Air, Gases

WETTED PARTS

Body	SS 316	Plunger, Insert	SS 430
Internals	SS 316	Spring	SS 302
Guide Assembly	SS 304	Seat, Seals	Viton
Shadow-Ring	Copper	Fastener	SS 304

SPECIFICATION

Valve Type	2/2 Internal Pilot Diaphragm Operated Dual Flow Solenoid Valve
Body Material	CF8, CF8M (SS CAST)
Orifice	20/2.2
Port Connection	3/4" BSP (F)
Media	LPG
Pressure	0.5 - 25 bar
Seal	Hytrel
Solenoid Voltage, Current	220 V AC
Enclosure	Explosion Proof Ex d
Application	LPG DISPENSING
Model	-

AMBIENT TEMPERATURE

-10 °C to 70 °C

FLUID TEMPERATURE

-10 °C to 70 °C

DIMENSIONS

All Dimensions are in mm

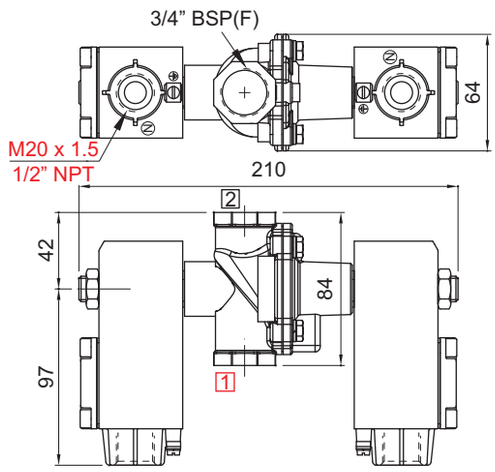

PORT CONNECTION

FUNCTION	INLET	OUTLET
NC	2	1

Contact Rotex for any other ambient, fluid temperature, media and application.

Can be used for Water, Oil or dispensing of other fluids

2/2 DUAL FLOW SOLENOID VALVE FOR PETROL/ DIESEL/ KEROSENE DISPENSING

TYPE	PRESSURE

TYPE	PRESSURE

TYPE	PRESSURE
3224V01	0.5 - 3.5 bar

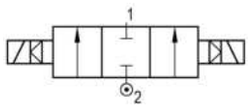

FEATURES

- Bubble tight shut off
- Mounts in any position
- Vibration resistance to 9g
- Suitable for high speed cycling
- Speed up to 600 cycles/ min
- Life >10 million cycles



WETTED PARTS

Body	Anodized Aluminium	Plunger, Insert	SS 430
Internals	Aluminium	Spring	SS 302
Guide Assembly	Brass	Seat, Seals	Hytrel
Shadow-Ring	Copper	Fastener	SS 304

OPTION

Body Material	-
Orifice	-
Connection	1” BSP (F)
Media	-
Seal	Viton
Voltage	220 V AC/ 110 V DC
Current	-
Enclosure	Weather Proof
Solenoid	Dual Mounted
Extended Application	Dispensing of Oil, Water,
	Fuel in Precise Quantity
	Dispensing of Air, Gases

SPECIFICATION

Valve Type	2/2 Internal Pilot Diaphragm Operated Dual Flow
Body Material	Aluminium Cast
Orifice	25/1.8
Port Connection	1” Flange
Media	Petrol/ Diesel/ HSD
Pressure	0.5 - 3.5 bar
Seal	Hytrel
Coil Voltage, Current	220 V AC
Enclosure	Explosion Proof Ex m
Application	Petrol/ Diesel/ SKO Dispensing
Model	-

AMBIENT TEMPERATURE

-10˚C to 70˚C

FLUID TEMPERATURE

-10˚C to 70˚C

DIMENSIONS

All Dimensions are in mm

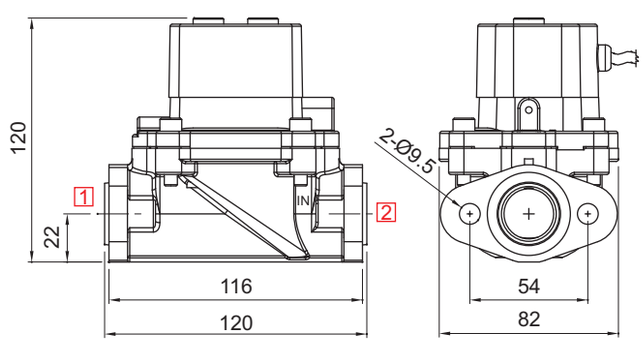

PORT CONNECTION

FUNCTION	INLET	OUTLET
NC	2	1

Contact Rotex for any other ambient, fluid temperature, media and application.

Can be used for dispensing of other liquid/ gases

ROTEX
Engineering For The Future

2/2 NORMALLY CLOSED SOLENOID VALVE FOR TERMINAL/ GANTARY AUTOMATION

TYPE	PRESSURE

TYPE	PRESSURE

TYPE	PRESSURE
3274I	0 - 21 bar

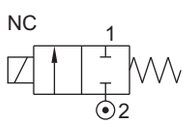

FEATURES

- Bubble tight shut off
- Mounts in any position
- Vibration resistance up to 9g
- Suitable for high speed cycling
- Speed up to 600 cycles/ min
- Life >10 million cycles



WETTED PARTS

Body	SS 316	Plunger , Insert	SS 430
Internals	SS 316	Spring	SS 302
Guide Assembly	SS 304	Seat, Seals	Viton GLT
Shadow-Ring	Copper		

SPECIFICATION

Valve Type	2/2 Direct Acting Normally Closed
Body Material	SS 316
Orifice	3.5
Port Connection	1/4" NPT(F)
Media	Petrol/ Diesel/ SKO/ HSD
Pressure	0 - 21 bar
Seal	Viton GLT
Coil Voltage, Current	230 V AC
Enclosure	Explosion Proof Ex d
Application	Petrol/ Diesel/ SKO Dispensing
Model	-

OPTION

Body Material	-
Orifice	-
Connection	-
Media	Water
Seal	-
Voltage	Any
Current	Any
Enclosure	Weather Proof
Solenoid	Size II
Extended Application	-

AMBIENT TEMPERATURE

-20°C to 70°C

FLUID TEMPERATURE

-20°C to 70°C

PORT CONNECTION

FUNCTION	INLET	OUTLET	
3274I	2	1	

Contact Rotex for any other ambient, fluid temperature, media and application.

⚠ For Valve type 3274 does not have shadowning.

Specifications are subject to change without notice

2/2 NORMALLY CLOSED SOLENOID VALVE FOR TERMINAL/ GANTARY AUTOMATION

SPECIFICATION

PORT CONNECTION			PRE-SSURE bar						BODY MATERIAL AND INTERNALS				SEALS					MANUAL OVERRIDE			SOLENOID ENCLOSURE							SUFFIX		POWER VA			
																					WEATHER PROOF				EXPLOSION PROOF									
SIZE	BSP(F)	NPT(F)	MINIMUM	MAXIMUM	ORIFICE (mm)	FLOW FACTOR kv (LPM OF WATER @ 1 bar ΔP)	VALVE TYPE	PILOT PRESSSURE	ALUMINIUM	ALUMINIUM + SS	BRASS (STD. PORT NPT)	SS 316 (STD. PORT NPT)	NBR	Viton GLT	EPDM	HYTREL	PTFE	NIL	STAYPUT CUM MOMENTARY	MOMENTARY	FLYING LEAD	PLUG IN, IP67	SQ. PLUG IN, IP67	TERMINAL BOX IP67	EXPLOSION PROOF IIC, IP67	IS WITH CIRCUIT Ex ia IIC T6, IP67	SOLENOID SIZE	OXYGEN	AMMONIA	AC INRUSH	AC HOLDING	DC	CONSTRUCTION REFERENCE NUMBER
1/4"	2G	2R	0	21	3.5	4	3274I					B5	S2G			S8						25		E		18			20	20	20	

Cable Entry	E	Ex emb
M20 x 1.5	1 9	5 8 M S5 8 L T M S
1/2" NPT	1 6	5 8 N S5 8 L T N S

※ = Do not specify when opted for. Refer Page # 22 for Value of ※
✓= Options available

DIMENSIONS

All Dimensions are in mm

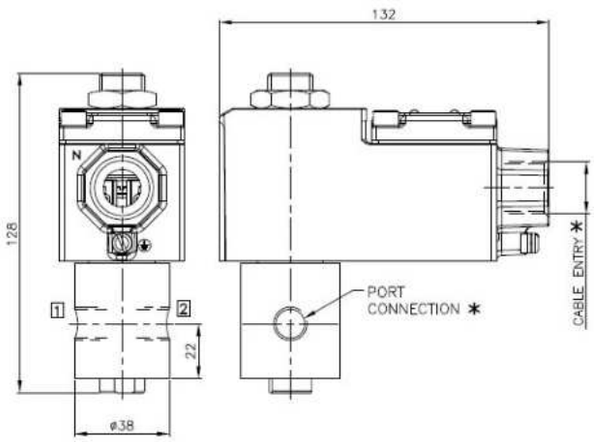

11

ROTEX
Engineering For The Future

2/2 NORMALLY OPEN SOLENOID VALVE FOR TERMINAL/ GANTARY AUTOMATION

TYPE	PRESSURE

TYPE	PRESSURE

TYPE	PRESSURE
3275I	0 - 18 bar

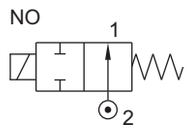

FEATURES

- Bubble tight shut off
- Mounts in any position
- Vibration resistance up to 9g
- Suitable for high speed cycling
- Speed up to 800 cycles/ min
- Life >15 million cycles



WETTED PARTS

Body	SS 316	Plunger, Insert	SS 430
Internals	SS 316	Seat, Seals	Viton GLT
Guide Assembly	SS 304	Fastener	SS 304
Spring	SS 302	Shadow ring	Copper

SPECIFICATION

Valve Type	2/2 Direct Acting Normally Open
Body Material	SS316
Orifice	3
Port Connection	1/4" NPT(F)
Media	Petrol/ Diesel/ HSD SKO/ LPG
Pressure	0 - 18 bar
Seal	Viton GLT
Coil Voltage, Current	230V AC
Enclosure	Explosion Proof Ex d
Application	Petrol/ Diesel/ LPG/ SKO Dispensing
Model	-

OPTION

Body Material	-	-
Orifice	-	-
Connection	-	-
Media	-	-
Seal	-	-
Voltage	Any	Any
Current	Any	Any
Enclosure	Weather Proof	Weather Proof
Solenoid Size	18	18
Extended	-	-
Application	-	-

AMBIENT TEMPERATURE

-20°C to 70°C

FLUID TEMPERATURE

-20°C to 70°C

PORT CONNECTION

FUNCTION	INLET	OUTLET	
3275I	2	1	

Contact Rotex for any other ambient, fluid temperature, media and application.

For Valve type 3275I operated with AC voltage select in built full rectified solenoid with FR option

Specifications are subject to change without notice

2/2 NORMALLY OPEN SOLENOID VALVE FOR TERMINAL/ GANTARY AUTOMATION

SPECIFICATION

PORT CONNECTION			PRE-SSURE bar						BODY MATERIAL AND INTERNALS				SEALS					MANUAL OVERRIDE			SOLENOID ENCLOSURE						SUFFIX		POWER VA			CONSTRUCTION REFERENCE NUMBER
																					WEATHER PROOF				EXPLOSION PROOF							
SIZE	BSP(F)	NPT(F)	MINIMUM	MAXIMUM	ORIFICE (mm)	FLOW FACTOR kv (LPM OF WATER @ 1 bar ΔP)	VALVE TYPE	PILOT PRESSURE	ALUMINIUM	ALUMINIUM + SS	BRASS (STD. PORT NPT)	SS 316 (STD. PORT NPT)	NBR	Viton	EPDM	HYTREL	PTFE	NIL	STAYPUT CUM MOMENTARY	MOMENTARY	FLYING LEAD	PLUG IN, IP67	SQ. PLUG IN, IP67	TERMINAL BOX IP67	EXPLOSION PROOF IIC, IP67	IS WITH CIRCUIT Ex ia IIC T6, IP67	SOLENOID SIZE	OXYGEN	AMMONIA	AC INRUSH	AC HOLDING	DC	
1/4”	2G	2R	0	21	2.2	2.5	3275I					B5	S2G		S8										E		18			20	20	20	
			0	18	3	4	3275I					B5	S2G		S8										E		18			20	20	20	

Cable Entry	E	Ex emb						
M20 x 1.5	1 9	5 8 M S	5 8 L T	M S				
1/2” NPT	1 6	5 8 N S	5 8 L T	N S				

※ = Do not specify when opted for. Refer Page # 22 for Value of ※
✓= Options available

DIMENSIONS

All Dimensions are in mm

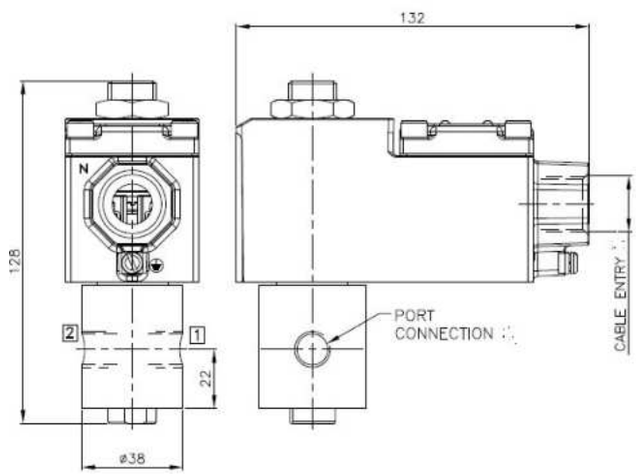

11

ROTEX
Engineering For The Future

SOLENOID VALVE FOR SUGAR INDUSTRY

TYPE	PRESSURE
57400	2 - 10 bar

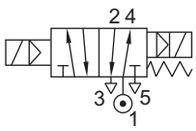

TYPE	PRESSURE
3013	2 - 10 bar

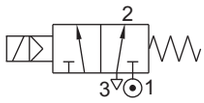

TYPE	PRESSURE
3012	2 - 10 bar

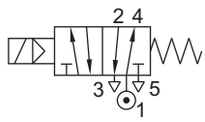

FEATURES

- Bubble tight shut off
- Mounts in any position
- Vibration resistance up to 9g
- Suitable for high speed cycling
- Speed up to 600 cycles/ min
- Life >10 million cycles



WETTED PARTS

Body	Anodized Aluminium	Plunger, Insert	SS 430
Internals	Aluminium, Brass and SS 316	Spring	SS 302
Guide Assembly	SS 304	Seat, Seals	NBR
Shadow-Ring	Copper	Fastener	SS 304

OPTION

Body Material	-
Orifice	-
Connection	
Media	-
Seal	-
Voltage	Any
Current	Any
Enclosure	-
Solenoid Size	14
Extended Application	-

SPECIFICATION

Valve Type	5/2 Internal Pilot Operated/ 3/2 Internal Pilot Operated NC
Body Material	Aluminium
Orifice	6
Port Connection	1/4" BSP(F)
Media	Air
Pressure	2 - 10 bar
Seal	NBR, Viton
Coil Voltage, Current	220V, 50Hz
Enclosure	Weather Proof Flying Lead IP67
Application	-
Model	-

AMBIENT TEMPERATURE

-30°C to 75°C

FLUID TEMPERATURE

-30°C to 75°C

SPARES	CODE
Seal Kit Orings and Plunger	98
Repair Kit, Orings, Plunger, Fasteners, Spring, Manual actuator Guide Assembly	99
Solenoid Kit	34

Contact Rotex for any other ambient, fluid temperature, media and application.

Specifications are subject to change without notice

PRODUCTS FOR SUGAR INDUSTRY



BALL VALVE WITH ROTARY ACTUATOR







BUTTERFLY VALVE WITH ROTARY ACTUATOR



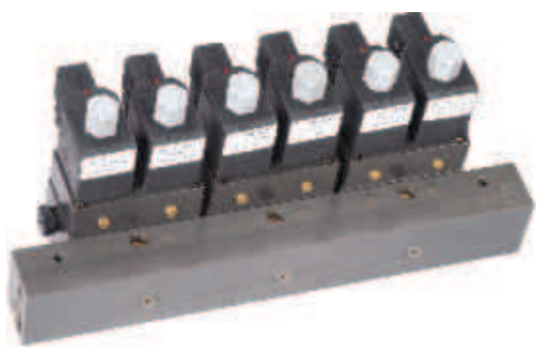



ANGLE SEAT VALVE

For water and Steam media.



5/2 and 3/2 Valve mounted on manifold
for centritage/ power Plant ete.

11

ROTEX
Engineering For The Future

3/2 NORMALLY OPEN SOLENOID VALVE FOR AIR BLASTER OPERATION

TYPE	PRESSURE

TYPE	PRESSURE

TYPE	PRESSURE
3068	2 - 10 bar

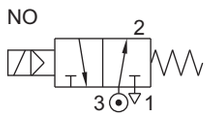

FEATURES

- Bubble tight shut off
- Mounts in any position
- Vibration resistance up to 9g
- Suitable for high speed cycling
- Speed up to 600 cycles/ min
- Life >10 million cycles



WETTED PARTS

Body	Anodized Aluminium	Plunger, Insert	SS 430
Internals	Aluminium, Brass and SS 316	Spring	SS 302
Guide Assembly	SS 304	Seat, Seals	NBR
Shadow-Ring	Copper	Fastener	SS 304

OPTION

Body Material	-
Orifice	-
Connection	
Media	-
Seal	EPDM/ Viton
Voltage	Any
Current	Any
Enclosure	Weather Proof
Solenoid Size	14
Extended Application	-

SPECIFICATION

Valve Type	3/2 Internal Pilot Operated NO
Body Material	Aluminium
Orifice	7
Port Connection	Sub Base
Media	Air
Pressure	2 - 10 bar
Seal	NBR
Coil Voltage, Current	-
Enclosure	Weather Proof Flying lead IP54
Application	-
Model	-

AMBIENT TEMPERATURE

-30°C to 75°C

FLUID TEMPERATURE

-30°C to 75°C

PORT CONNECTION

FUNCTION	INLET	OUTLET	EXHAUST	PILOT EXHAUST
NO	3	2	1	6

DIMENSIONS

All Dimensions are in mm

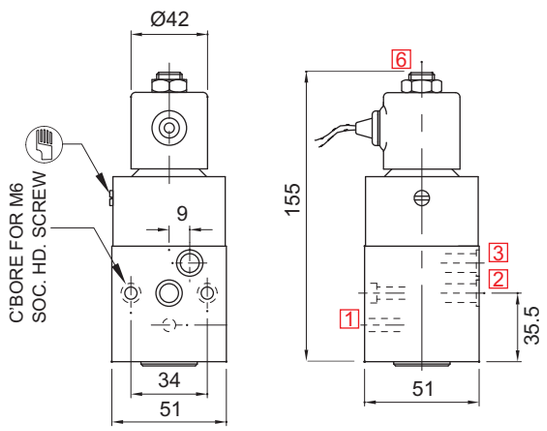

Contact Rotex for any other ambient, fluid temperature, media and application.

3/2 NORMALLY OPEN SOLENOID VALVE FOR AIR BLASTER OPERATION

TYPE	PRESSURE

TYPE	PRESSURE

TYPE	PRESSURE
3072	2 - 10 bar

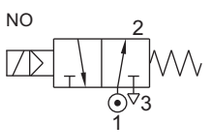



THIS MODEL IS DISCONTINUED.

CONTACT ROTEX IF MUST TO OFFER SPECIFIC

ROTEX
Engineering For The Future

3/3 SOLENOID VALVE FOR TYRE INFLATION

TYPE	PRESSURE

TYPE	PRESSURE
VB4	2 - 16 bar
VB9	2 - 20 bar

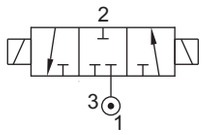

TYPE	PRESSURE
VB4	0 - 16 bar
VB26	0 - 16 bar

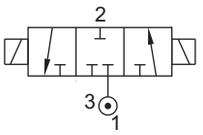



THIS MODEL IS DISCONTINUED.

CONTACT ROTEX IF MUST TO OFFER SPECIFIC

ROTEX
Engineering For The Future

2/2 NORMALLY CLOSED SOLENOID VALVE WITH INBUILT FLOW CONTROLLER

TYPE	PRESSURE

TYPE	PRESSURE

TYPE	PRESSURE
3322	0-3.5 bar

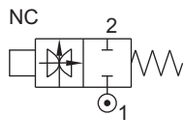

FEATURES

- Bubble tight shut off
- Mounts in any position
- Vibration resistance up to 9g
- Suitable for high speed cycling
- Speed up to 600 cycles/ min
- Life >10 million cycles





WETTED PARTS

Body	Anodized Aluminium	Plunger, Insert	SS 430
Internals	Aluminium, Brass and SS 316	Spring	SS 302
Guide Assembly	SS 304	Seat, Seals	NBR/ EPDM/ SILICON
Shadow-Ring	Copper	Fastener	SS 304

OPTION

Body Material	-
Orifice	-
Connection	-
Media	-
Seal	-
Voltage	Any
Current	Any
Enclosure	-
Solenoid Size	14
Extended Application	-

SPECIFICATION

Valve Type	2/2 Direct Acting Normally Closed with inbuilt flow controller
Body Material	SS 316
Orifice	3.5
Port Connection	1/4" BSP (F)
Media	Soda/ Syrup
Pressure	0 - 3.5 bar
Seal	EPDM
Coil Voltage, Current	-
Enclosure	Weather Proof Plug in IP67
Application	-
Model	-

AMBIENT TEMPERATURE

-20°C to 70°C

FLUID TEMPERATURE

-20°C to 70°C

DIMENSIONS

All Dimensions are in mm

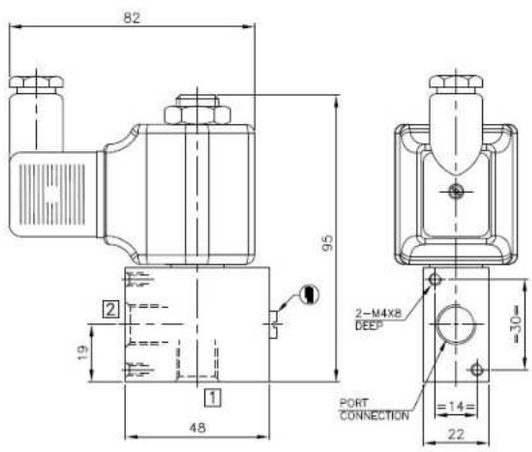

PORT CONNECTION

	INLET	OUTLET
NC	1	2

Contact Rotex for any other ambient, fluid temperature, media and application.

Specifications are subject to change without notice

2/2, 3/2 QUICK ACTING VALVE

TYPE	PRESSURE

TYPE	PRESSURE
3400T	0 - 4 bar

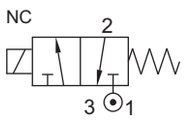

TYPE	PRESSURE
3400	0 - 7 bar

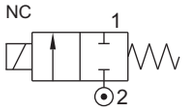

B



THIS MODEL IS DISCONTINUED.

CONTACT ROTEX IF MUST TO OFFER SPECIFIC

ROTEX
Engineering For The Future

2/2, 3/2 DIRECT ACTING SOLENOID VALVE FOR HOT WATER, STEAM

TYPE	PRESSURE

TYPE	PRESSURE
3319	0 - 6 bar

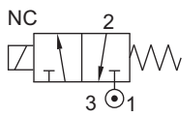

TYPE	PRESSURE
3318	0 - 6 bar

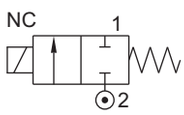



SM

THIS MODEL IS DISCONTINUED.

CONTACT ROTEX IF MUST TO OFFER SPECIFIC

Specifications are subject to change without notice

1

ROTEX
Engineering For The Future

3/2 DIRECT ACTING NORMALLY CLOSED/ OPEN SOLENOID VALVE FOR SCREW COMPRESSOR

TYPE	PRESSURE

TYPE	PRESSURE
3001	0 - 12 bar

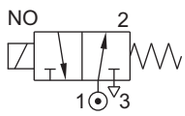

TYPE	PRESSURE
3002	0 - 12 bar

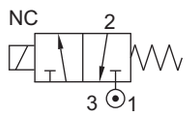

FEATURES

- Bubble tight shut off
- Mounts in any position
- Vibration resistance up to 9g
- Suitable for high speed cycling
- Speed up to 600 cycles/min
- Life >10 million cycles



WETTED PARTS

Body	Anodized Aluminium	Plunger, Insert	SS 430
Internals	Aluminium, Brass and SS 316	Spring	SS 302
Guide Assembly	SS 304	Seat, Seals	NBR
Shadow-Ring	Copper	Fastener	SS 304

OPTION

Body Material	-
Orifice	-
Connection	-
Media	-
Seal	-
Voltage	Any
Current	Any
Enclosure	-
Solenoid	14
Extended Application	-

SPECIFICATION

Valve Type	3/2 Direct Acting Normally Open
Body Material	Aluminium
Orifice	1.0
Port Connection	1/8" BSP (F)
Media	-
Pressure	0 - 12 bar
Seal	NBR
Coil Voltage, Current	-
Enclosure	Weather Proof Plug in IP67
Application	Unloader valve for atlas copco
Model	-

AMBIENT TEMPERATURE

-30°C to 75°C

FLUID TEMPERATURE

-30°C to 75°C

DIMENSIONS

All Dimensions are in mm

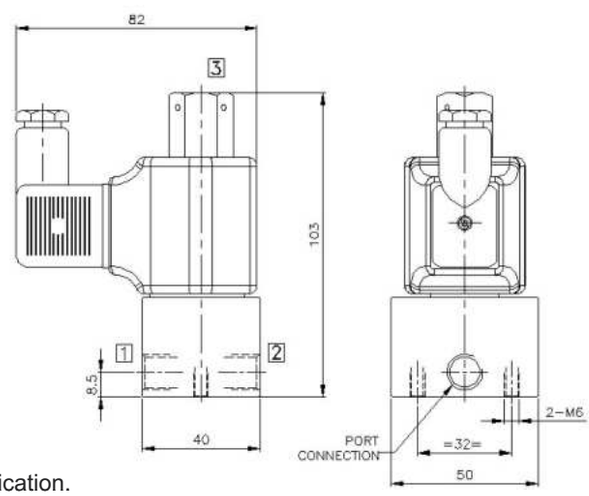

PORT CONNECTION

FUNCTION	INLET	OUTLET	EXHAUST
3002	1	2	3
3001	3	2	1

Contact Rotex for any other ambient, fluid temperature, media and application.

⚠ Contact Rotex for solenoid valve requirement for any other make of compressor

Specifications are subject to change without notice

3/2 NC SUB BASE MOUNTED SOLENOID VALVE FOR COMPRESSOR UNLOADER OPERATION

TYPE	PRESSURE

TYPE	PRESSURE

TYPE	PRESSURE
5004	0 - 16 bar

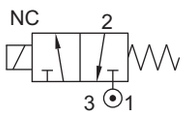

FEATURES

- Bubble tight shut off
- Mounts in any position
- Vibration resistance up to 9g
- Suitable for high speed cycling
- Speed up to 600 cycles/ min
- Life >10 million cycles



WETTED PARTS

Body	Anodized Aluminium	Plunger, Insert	SS 430
Internals	Aluminium, Brass and SS 316	Spring	SS 302
Guide Assembly	SS 304	Seat, Seals	NBR
Shadow-Ring	Copper	Fastener	SS 304

SPECIFICATION

Valve Type	3/2 Direct Acting Normally Closed
Body Material	Aluminium
Orifice	1.5
Port Connection	Sub Base
Media	Air
Pressure	0 - 15 bar
Seal	NBR
Coil Voltage, Current	-
Enclosure	Weather Proof Plug in IP67
Application	Compressor
Model	5004

OPTION

Body Material	-
Orifice	-
Connection	-
Media	-
Seal	-
Voltage	Any
Current	Any
Enclosure	-
Solenoid Size	14
Extended Application	-

AMBIENT TEMPERATURE

-30°C to 75°C

FLUID TEMPERATURE

-30°C to 75°C

PORT CONNECTION

FUNCTION	INLET	OUTLET	EXHAUST
NC	1	2	3

DIMENSIONS

All Dimensions are in mm

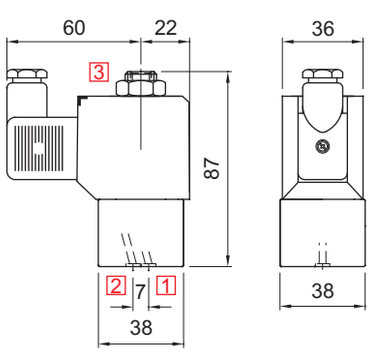

Contact Rotex for any other ambient, fluid temperature, media and application.

Contact Rotex for solenoid valve for any other make of compressor

ROTEX
Engineering For The Future

2/2 AND 3/2 SOLENOID VALVE WITH SEQUENTIAL TIMER AND PLUG












11

2/2, 3/2 Valve when opted with square plugin solenoid enclosure
Type 25,can be Supplied with Sequential timer
For details refer to respective pages

APPLICATION

Drain, Air Drier, Dosing

TIMER SPECIFICATION

Voltage range 1 =110-240 C AC/DC
Voltage range 2 =7-36V AC/DC

Adjustabe range of Time Option-1

ON Time (Open Time) 1 sec - 10 min
OFF Time (Close Time) 1 sec- 99 H, 59M, 59S

Adjustabe range of Time Option-2

ON Time (Open Time) 0.1 sec-99 sec
OFF Time (Close Time) 1 sec- 99 H,59M,59S
Switch Capacity 2Amps/1.5Amps
Protection : IP65
Square DIN Plug can be fitted at 90 degree at any of the Three Cable Entry Position

ORDERING CODE

Add TM to Valve Code.
Eg.20101-4-2G+III-110V 50Hz-25-TM
24101-12-4G+III-230V-50Hz-25-TM

Spare Timer
e.g.SQTI

Contact Rotex for any other ambient, fluid temperature, media and application.

Specifications are subject to change without notice

5/2, 3/2 CONVERTIBLE, INLINE POPPET, NAMUR SOLENOID VALVE

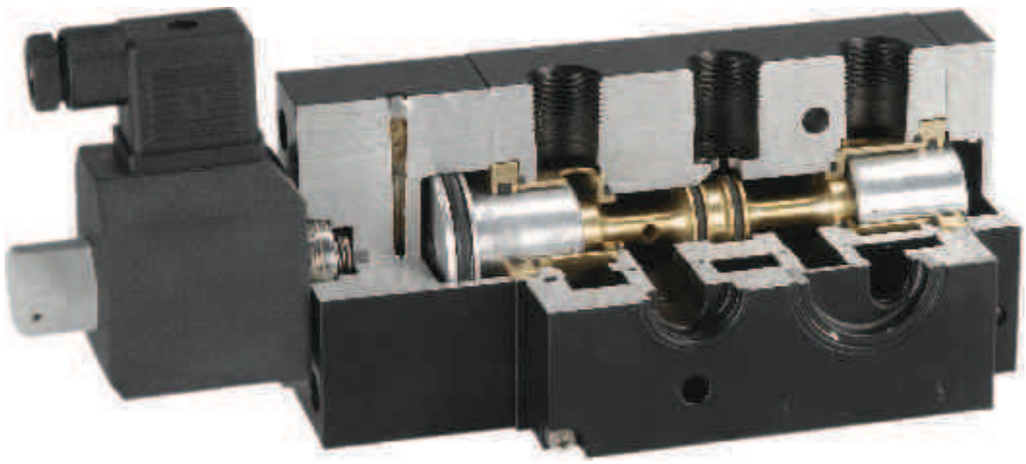

- Voltage, current and enclosure can be changed by replacing solenoid without affecting performance of the valve
- Easily serviceable
- Body material Aluminium and SS 316
- Life 60 million cycles
- Fast acting up to 1000 cycles per minute
- Exhaust ports can be blocked for speed regulation
- Can be supplied with NAMUR 2,3 and 4
- Larger Exhaust for faster operation of the actuator
- Slim poppet design
  In 3/2 mode exhaust purged into the spring chamber of pneumatic actuator
- Manual override provided
- Suitable for Air, Gas, Water, Oil
- O ring and fasteners to mount solenoid Valve on the actuator are provided
- Temperature – 20 ºC to 70 ºC
- Lubrication not necessary
- 5/2, 3/2 convertible at site without need of any special tools
- OIL Media Temperature Restricted from 0 °C to 100 °C

11

3/2 POPPET DESIGN NAMUR SOLENOID VALVE

- Poppet design
- Manual override provided
- Voltage, current and enclosure can be changed by replacing solenoid without affecting performance of the valve
- Suitable for Air, Gas, Water, Oil
- O rings and fasteners to mount solenoid valve on the actuator are Provided
- Temperature – 20 ºC to 70 ºC
- Exhaust purged into the spring chamber of pneumatic actuator.
- Lubrication not necessary
- Direct acting large Orifice



ROTEX
Engineering For The Future

APPLICATION NAMUR SOLENOID VALVE

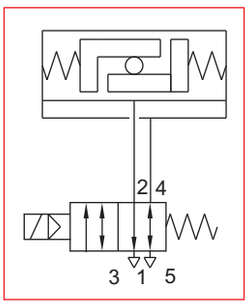

Type 30106

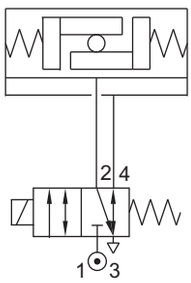

30318, 30318LW

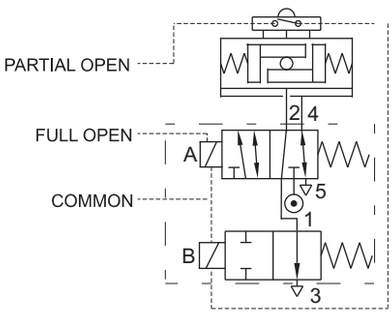

Type 30138

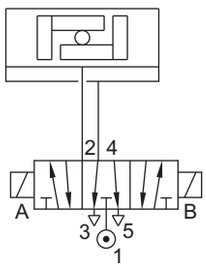

50401, 50401LW
50402, 50402LW

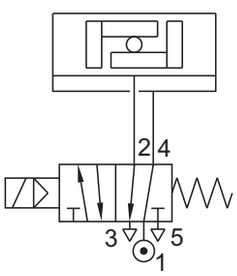

5/2 MODE

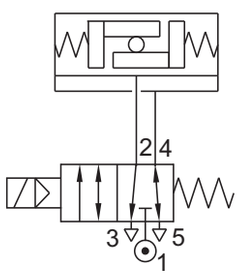

3/2 MODE

51424, 51424LW, 51424IS,
VAD 213NC

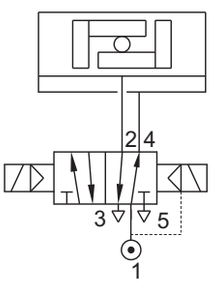

5/2 MODE

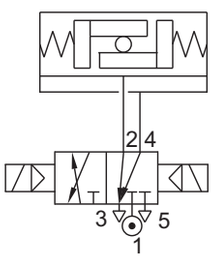

3/2 MODE

57450, 57450LW, 57450IS
57442, 57442LW, 57442IS

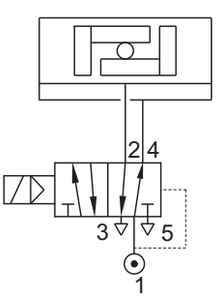

5/2 MODE

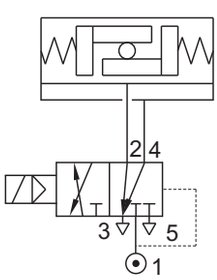

3/2 MODE

51450, 51450LW, 51450IS
51442 51442LW, 51442IS

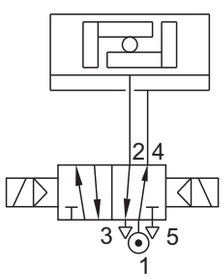

5/2 MODE

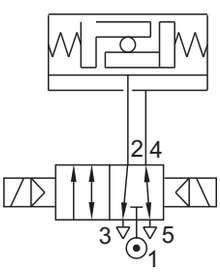

3/2 MODE

VAD214NC

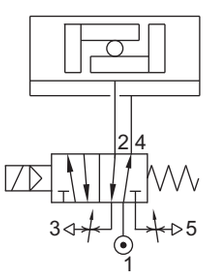

5/2 MODE

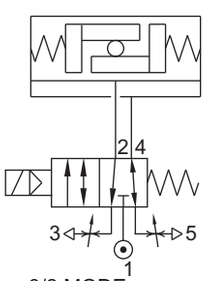

3/2 MODE

VAD213NCFC

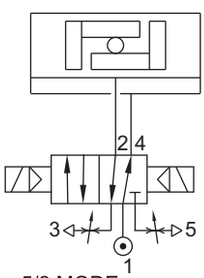

5/2 MODE

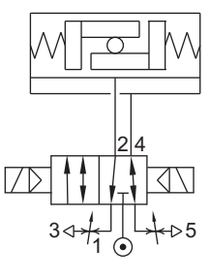

3/2 MODE

VAD214NCFC

11

Specifications are subject to change without notice

2

3/2 DIRECT ACTING NAMUR SOLENOID VALVE

TYPE	PRESSURE

TYPE	PRESSURE

TYPE	PRESSURE
30106	0 - 15 bar

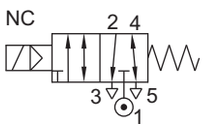

FEATURES

- Ideally suited for spring return actuator
- Low cost economical model
- High pressure up to 150 bar available
- Dust caps provided on the exhaust ports



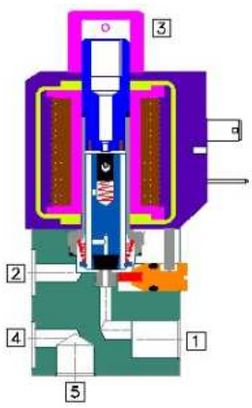

WETTED PARTS

Code	※	B5
Body	Anodized Aluminium	SS 316
Internals	Aluminium, SS 316	SS 316
Guide Assembly	SS 304	
Shadow-Ring	Copper/ Silver/ None	
Plunger, Insert	SS 430	
Spring	SS 302	
Fasteners	SS 304	
Seat, Seals	NBR, Viton, F. Silicon	

AMBIENT AND FLUID TEMPERATURE

-30 °C to 75 °C

SPECIAL VERSION AND SUFFIX

Suffix : (Valve) AM
Special version : (Solenoid) CO, FR, SS, LC, III

MEDIA

Air, Inert Gases

APPLICATION

Operation of single acting actuator

PORT CONNECTION

INLET	OUTLET	OUTLET	EXHAUST	EXHAUST
1	2	4	3	5

Contact Rotex for
- Any other ambient, fluid temperature, media and application
- UL listed, c(UL) Listed general purpose Valve
- Media like Water, Light Oil etc.

SPARES (Refer page 25 for ordering code)

SPARE KIT	CODE
Seal Kit : Oring Set and Plunger Assembly	98
Repair Kit : Oring Set, Plunger Assembly, Fastener, Springs, Manual Override, Guide Assembly, Piston Kit	99
Solenoid Kit : Solenoid, Gasket	34

APPROVAL (* applied for)

Approval	TYPE 4X, 6P	IP67	Ex d IIC T4 or T5 or T6 IP66	Ex ia IIC T6 IP67	DGMS	CCOE
		✓	✓	✓	✓	✓
CE		✓	✓	✓		
UL	✓		*			
CEPEL			✓	✓		
EAC			✓	✓		
IECEx			✓	✓		

ROTEX
Engineering For The Future

3/2 DIRECT ACTING NAMUR SOLENOID VALVE

SPECIFICATION

PORT CONNECTION			PRE-SSURE bar						BODY MATERIAL AND INTERNALS				SEALS					MANUAL OVERRIDE			SOLENOID ENCLOSURE WEATHER PROOF				SOLENOID ENCLOSURE EXPLOSION PROOF			OUTLEY PORTS	POWER VA			
SIZE	BSP(F)	NPT(F)	MINIMUM	MAXIMUM	ORIFICE (mm)	FLOW FACTOR kv (LPM OF WATER @ 1 bar ΔP)	VALVE TYPE	PILOT PRESSURE	ALUMINIUM	ALUMINIUM + SS	BRASS (STD. PORT NPT)	SS 316 (STD. PORT NPT)	NBR	Viton			F. Silicon	NIL	STAYPUT CUM MOMENTARY	MOMENTARY	FLYING LEAD	PLUG IN, IP67	SQ. PLUG IN, IP67	TERMINAL BOX IP67	EXPLOSION PROOF IIC, IP67	LARGE ENCLOSURE	SOLENOID SIZE	NAMUR	AC INRUSH	AC HOLDING	DC	CONSTRUCTION REFERENCE NUMBER
3/2 ON/ OFF APPLICATION																																
1/4"	2G	2R	0	15	1.6	1.5	30106		※			B5	※	S2			S19	M0	※	M8		22	25	T	E	III	14	1 or 2	18	12	8	N3
			0	10	1.8	1.8	30106		※			B5	※	S2			S19	M0	※	M8		22	25	T	E	III	14	1 or 2	18	12	8	N3
			0	8	2.2	2.2	30106		※			B5	※	S2			S19	M0	※	M8		22	25	T	E	III	14	1 or 2	18	12	8	N3
			0	6	2.5	3.0	30106		※			B5	※	S2			S19	M0	※	M8		22	25	T	E	III	14	1 or 2	18	12	8	N3

Cable Entry	T	E																														
		E	x	d		E	x	a		E	x	e	m	b																		
M20 x 1.5	1	9	3	9	8	7	M	S	6	6	M	S	5	8	M	S	5	8	L	T	M	S										
M25 x 1.5					8	7			6	6			5	8			5	8	L	T												
1/2" NPT	1	6	3	7	8	7	N	S	6	6	N	S	5	8	N	S	5	8	L	T	N	S										

※ = Do not specify when opted for. Refer Page # 22 for Value of ※

ORDERING CODE, EXAMPLE

VALVE + SOLENOID

TYPE – SUFFIX – ORIFICE – PORT CONNECTION – BODY AND INTERNALS – MANUAL OVERRIDE – SEAL - MEDIA + SIZE – VOLTAGE – CURRENT – SOLENOID ENCLOSURE – SPECIAL VERSION – POWER – INSULATION – APPROVAL
e.g. 30106-2.2-2G+I-24V-DC-19-H

DIMENSIONS

All Dimensions are in mm

CONSTRUCTION REFERENCE N3

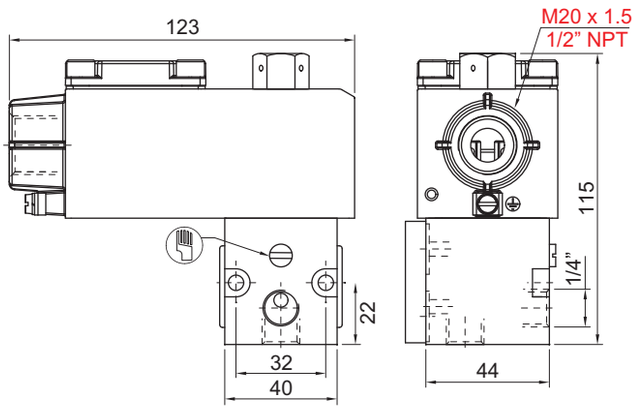

TERMINAL BOX/ Ex d LARGE ENCLOSURE TYPE 16, 19, 37, 39, 58, 58LT

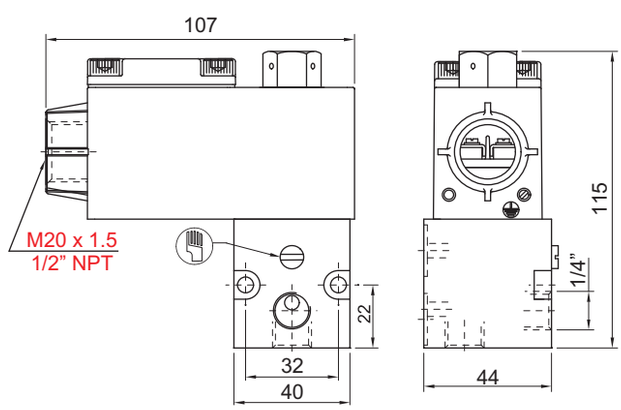

TERMINAL BOX/ Ex d TYPE 16, 19, 37, 39, 58, 58LT

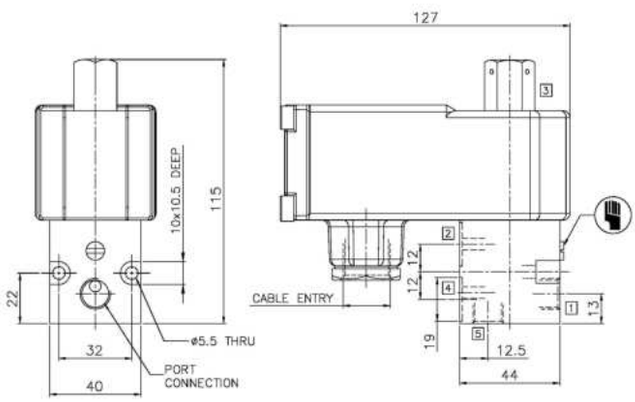

BCE SOLENOID TYPE 87

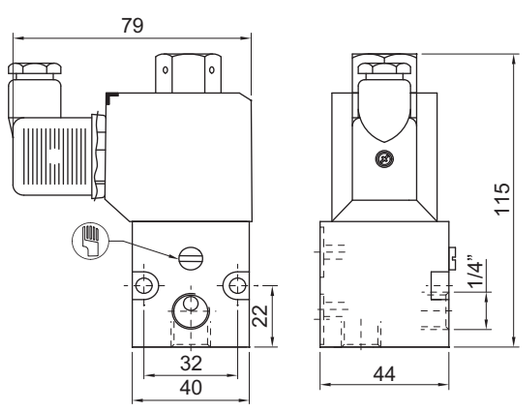

PLUG IN SOLENOID TYPE 22/ 25

Specifications are subject to change without notice

ROTEX
Engineering For The Future

3/2 DIRECT ACTING NAMUR SOLENOID VALVE

TYPE	PRESSURE

TYPE	PRESSURE

TYPE	PRESSURE
30318	0 - 10 bar

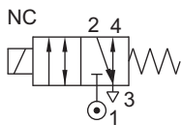





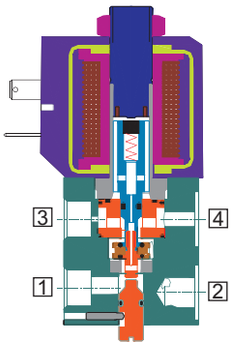

REFER CATALOGE BOOK OF

30318

SERIES : 32D

3/2 DIRECT ACTING REGULATING, NAMUR SOLENOID VALVE

TYPE	PRESSURE

TYPE	PRESSURE

TYPE	PRESSURE
30138	0 - 10 bar

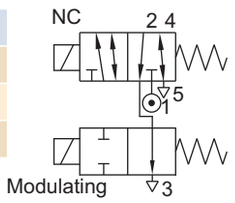

FEATURES

- Most suited for stopping spring return actuator at mid position set through limit switch
- Air or Power failure to return
- Solenoid can be operated directly or through PID Controller
- Ideal for modulating application
- Dust cap provided on the exhaust port

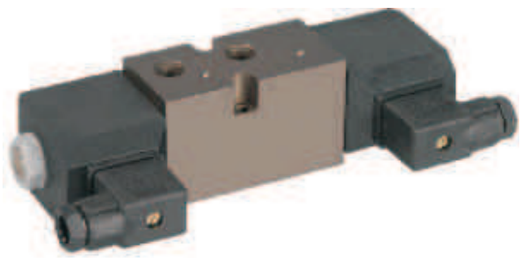

WETTED PARTS

Code	※	B1	B5
Body	Anodized Aluminium	Anodized Aluminium	SS 316
Internals	Aluminium, Brass and SS 316	SS 316	SS 316
Guide Assembly	SS 304		
Shadow-Ring	-		
Plunger, Insert	SS 430		
Spring	SS 302		
Fasteners	SS 304		
Seat, Seals	NBR, Viton, Viton GLT, F. Silicon		

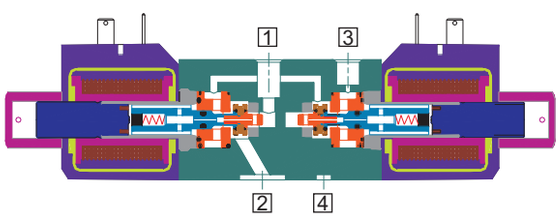

AMBIENT AND FLUID TEMPERATURE

-30 °C to 75 °C

SPECIAL VERSION AND SUFFIX

Suffix : (Valve) AM
Special version : (Solenoid) CO, FR, SS, LC, III

MEDIA

Air, Inert Gases

APPLICATION

Operation of single acting actuator

PORT CONNECTION

INLET	OUTLET	OUTLET	EXHAUST	EXHAUST
1	2	4	3	5

SPARES (Refer page 25 for ordering code)

SPARE KIT	CODE
Seal Kit : Oring Set and Plunger Assembly	98
Repair Kit : Oring Set, Plunger Assembly, Fastener, Springs, Manual Override, Guide Assembly, Piston Kit	99
Solenoid Kit : Solenoid, Gasket	34

APPROVAL (* applied for)

Approval	TYPE 4X, 6P	IP67	Ex d IIC T4 or T5 or T6 IP66	Ex ia IIC T6 IP67	DGMS	CCOE
		✓	✓		✓	✓
CE		✓	✓			
UL	✓		*			
CEPEL			✓			
EAC			✓			
IECEx			✓			

Contact Rotex for
- Any other ambient, fluid temperature, media and application
- UL listed, c UL Listed general purpose Valve

For Valve type 30138 operated with AC voltage select inbuilt full rectified special version of solenoid with option FR

ROTEX
Engineering For The Future

3/2 DIRECT ACTING REGULATING, NAMUR SOLENOID VALVE

SPECIFICATION

PORT CONNECTION			PRE-SSURE bar		ORIFICE (mm)	FLOW FACTOR kv (LPM OF WATER @ 1 bar ΔP)	VALVE TYPE	PILOT PRESSURE	BODY MATERIAL AND INTERNALS				SEALS					MANUAL OVERRIDE			SOLENOID ENCLOSURE						OUTLET PORT	POWER VA			CONSTRUCTION REFERENCE NUMBER
																					WEATHER PROOF				EXPLOSION PROOF						
SIZE	BSP(F)	NPT(F)	MINIMUM	MAXIMUM					ALUMINIUM	ALUMINIUM + SS	BRASS (STD. PORT NPT)	SS 316 (STD. PORT NPT)	NBR	Viton	EPDM	Viton GLT	F. Silicon	NIL	STAYPUT CUM MOMENTARY	MOMENTARY	FLYING LEAD	PLUG IN, IP67	SQ. PLUG IN, IP67	TERMINAL BOX IP67	EXPLOSION PROOF IIC, IP67	LARGE ENCLOSURE	SOLENOID SIZE	NAMUR	AC INRUSH	AC HOLDING	DC	
3/2 REGULATING APPLICATION																															
1/4”	2G	2R	0	10	5	8	30138		※	B1		B5	※	S2		S2GS19		※				22	25	T	E	III	14	2	8	8	8	N7

Cable Entry	T	E									
		Ex d						Ex emb			
M20 x 1.5	19	39	87M	S				58M	S	58LTM	S
M25 x 1.5			87					58		58LT	
1/2” NPT	16	37	87N	S				58N	S	58LTN	S

※ = Do not specify when opted for. Refer Page # 22 for Value of ※

ORDERING CODE, EXAMPLE

VALVE + SOLENOID

TYPE – SUFFIX – ORIFICE – PORT CONNECTION – BODY AND INTERNALS – MANUAL OVERRIDE – SEAL - MEDIA + SIZE – VOLTAGE - CURRENT – SOLENOID ENCLOSURE – SPECIAL VERSION – POWER – INSULATION – APPROVAL

e.g. 30138-5-2R-S2+III-110V-AC/DC-16-FR-H

DIMENSIONS

All Dimensions are in mm

CONSTRUCTION REFERENCE N7

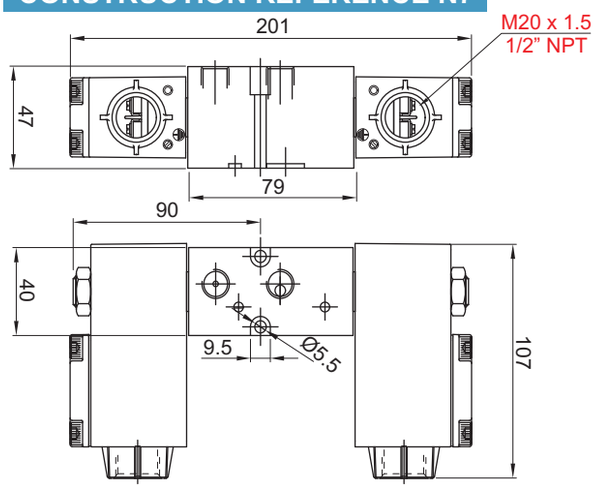

TERMINAL BOX/ Ex d TYPE 16, 19, 37, 39, 58, 58LT

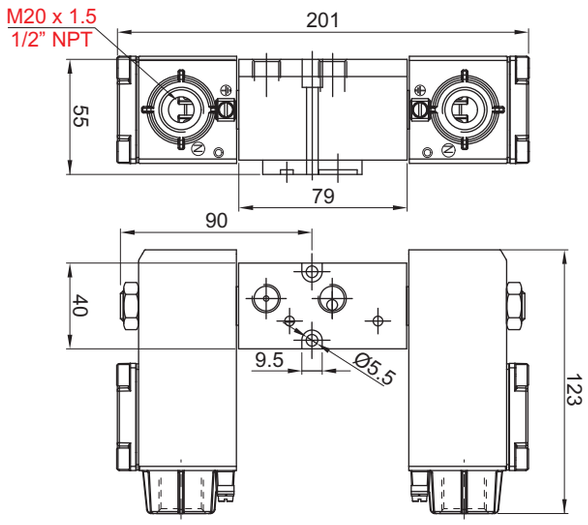

TERMINAL BOX/ Ex d LARGE ENCLOSURE, TYPE 16, 19, 37, 39, 58, 58LT

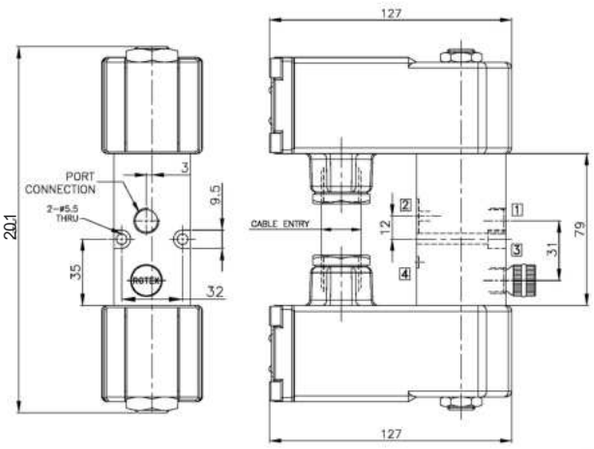

BCE SOLENOID/ Ex d TYPE 87

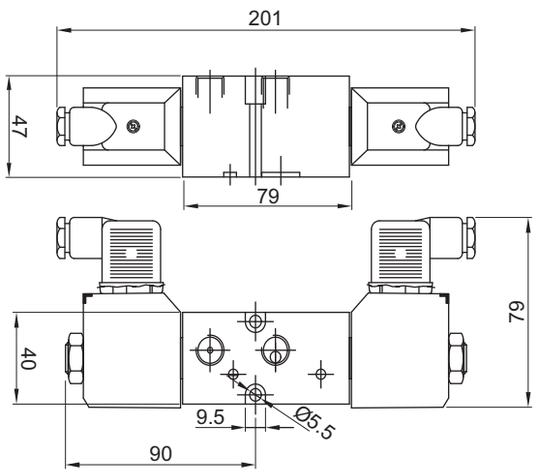

PLUG IN SOLENOID TYPE 22/ 25

Specifications are subject to change without notice

5/3 DIRECT ACTING ON/ OFF/ REGULATING, NAMUR SOLENOID VALVE

TYPE	PRESSURE

TYPE	PRESSURE

TYPE	PRESSURE
50401	0 - 10 bar
50402	0 - 10 bar

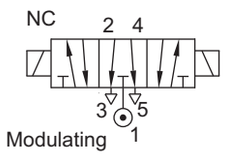

FEATURES

- Air or power failure to retain
- Low cost alternative to 5 port valve
- Ideally suited for operating double acting rotary actuator connected to ball or plug valve for on/ off, Control duty cycle
- Solenoid can be operated directly or through PID controller



WETTED PARTS

Code	※	B5
Body	Anodized Aluminium	SS 316
Internals	Aluminium, Brass and SS 316	SS 316
Guide Assembly	SS 304	
Shadow-Ring	Copper/ Silver/ None	
Plunger, Insert	SS 430	
Spring	SS 302	
Fasteners	SS 304	
Seat, Seals	NBR, Viton, Vition GLT, F. Silicon	

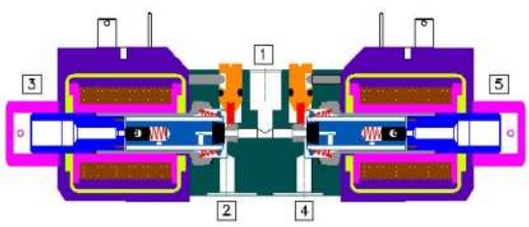

SPARES

(Refer page 25 for ordering code)

SPARE KIT	CODE
Seal Kit : Oring Set and Plunger Assembly	98
Repair Kit : Oring Set, Plunger Assembly, Fastener, Springs, Manual Override, Guide Assembly, Piston Kit	99
Solenoid Kit : Solenoid, Gasket	34

AMBIENT AND FLUID TEMPERATURE

-30 °C to 75 °C

SPECIAL VERSION AND SUFFIX

Suffix : (Valve) AM
Special version : (Solenoid) CO, FR, SS, LC, III

MEDIA

Air, Inert Gases

APPLICATION

Operation of double acting actuator

PORT CONNECTION

INLET	OUTLET	OUTLET	EXHAUST	EXHAUST
1	2	4	3	5

APPROVAL

(* applied for)

Approval	TYPE 4X, 6P	IP67	Ex d IIC T4 or T5 or T6 IP66	Ex ia IIC T6 IP67	DGMS	CCOE
ISI		✓	✓	✓	✓	✓
CE		✓	✓	✓		
UL	✓		*			
CCEPEL			✓	✓		
EAC			✓	✓		
IECEx			✓	✓		

Contact Rotex for
- Any other ambient, fluid temperature, media and application
- UL listed, c(UL)us Listed general purpose Valve

⚠ For Valve type 50402 operated with AC voltage select in built full rectified solenoid with FR option

ROTEX
Engineering For The Future

5/3 DIRECT ACTING ON/ OFF/ REGULATING NAMUR SOLENOID VALVE

SPECIFICATION

PORT CONNECTION			PRE-SSURE bar		ORIFICE (mm)	FLOW FACTOR kv (LPM OF WATER @ 1 bar ΔP)	VALVE TYPE	PILOT PRESSURE	BODY MATERIAL AND INTERNALS				SEALS					MANUAL OVERRIDE			SOLENOID ENCLOSURE						OUTLET PORT	POWER VA			CONSTRUCTION REFERENCE NUMBER
																					WEATHER PROOF				EXPLOSION PROOF							
SIZE	BSP(F)	NPT(F)	MINIMUM	MAXIMUM					ALUMINIUM	ALUMINIUM + SS	BRASS (STD. PORT NPT)	SS 316 (STD. PORT NPT)	NBR	Viton	EPDM	Viton GLT	F. Silicon	NIL	STAYPUT CUM MOMENTARY	MOMENTARY	FLYING LEAD	PLUG IN, IP67	SQ. PLUG IN, IP67	TERMINAL BOX IP67	EXPLOSION PROOF IIC, IP67	LARGE ENCLOSURE	SOLENOID SIZE	NAMUR	AC INRUSH	AC HOLDING	DC	
3/2 REGULATING APPLICATIOIN																															
1/4"	2G	2R	0	10	1.8	1.8	50401		※			B5	※	S2		S2G	S19	※		M8		22	25	T	E	III	14	1 or 2	18	12	8	N9
			0	10	5	8	50402		※			B5	※	S2		S2G	S19	※				22	25	T	E	III	14	2	18	12	8	N9

Cable Entry	T	E												
		Ex d			Ex a			Ex emb						
M20 x 1.5	19	39	87M	S	66M	S	58M	S	58LTM	S				
M25 x 1.5			87		66		58		58LT					
1/2" NPT	16	37	87N	S	66N	S	58N	S	58LTN	S				

※ = Do not specify when opted for. Refer Page # 22 for Value of ※

ORDERING CODE, EXAMPLE

VALVE + SOLENOID

TYPE – SUFFIX – ORIFICE – PORT CONNECTION – BODY AND INTERNALS – MANUAL OVERRIDE – SEAL - MEDIA + SIZE – VOLTAGE - CURRENT – SOLENOID ENCLOSURE – SPECIAL VERSION – POWER – INSULATION – APPROVAL

e.g. 50401-1.8-2G+I-24V-DC-22-H

DIMENSIONS

All Dimensions are in mm

CONSTRUCTION REFERENCE N9

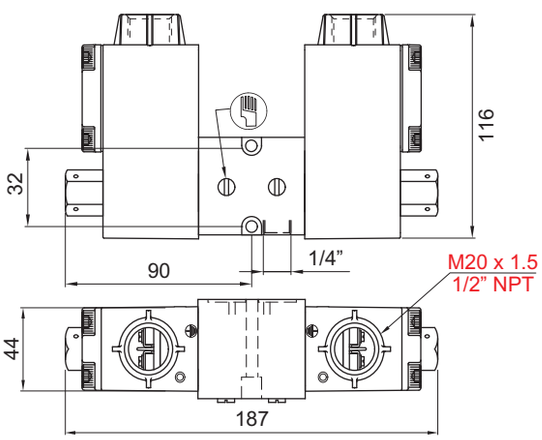

TERMINAL BOX/ Ex d TYPE 16, 19, 37, 39, 58, 58LT

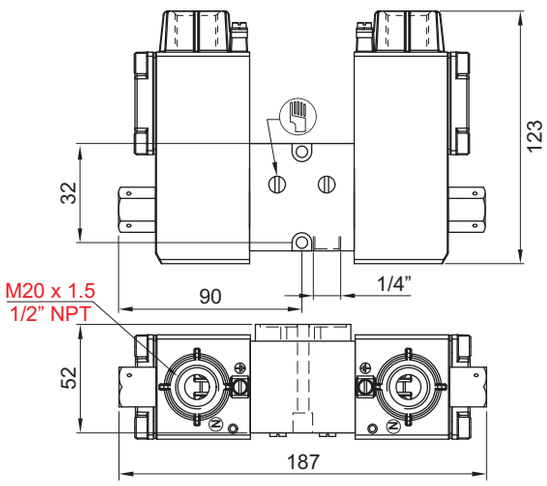

TERMINAL BOX/ Ex d LARGE ENCLOSURE, TYPE 16, 19, 37, 39, 58, 58LT

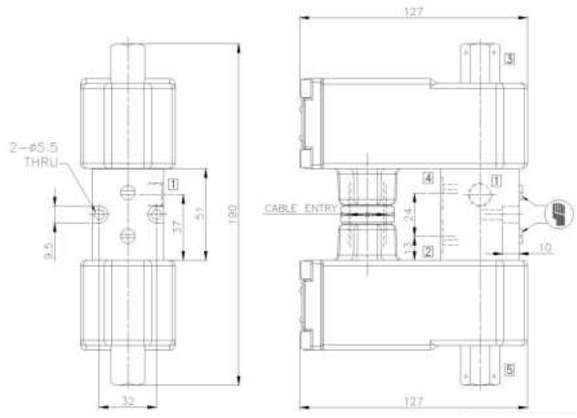

BCE SOLENOID TYPE 87

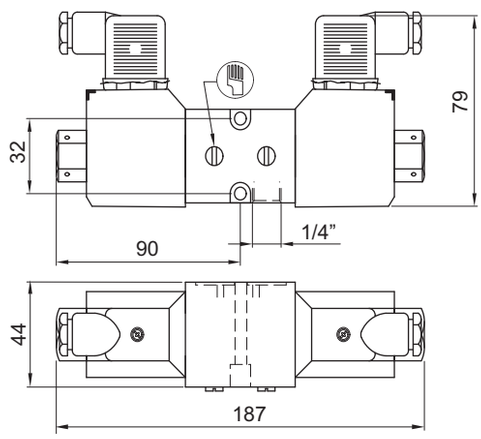

PLUG IN SOLENOID TYPE 22/ 25

Specifications are subject to change without notice

5/2, 3/2 CONVERTIBLE POPPET TYPE, NAMUR SOLENOID VALVE

TYPE	PRESSURE

TYPE	PRESSURE

TYPE	PRESSURE
51424	2 - 10 bar

MONO

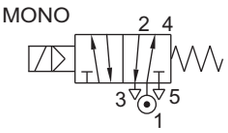

FEATURES

- Ideally suited for dusty out door application
- Poppet design for faster operation
- Dust cap fitted on exhaust port



Match Slot to 5/2 for 5/2



Match Slot to 3/2 for 3/2



WETTED PARTS

Code	※	B1	B5
Body	Anodized Aluminium	Anodized Aluminium	SS 316
Internals	Aluminium, Brass and SS 316	SS 316	SS 316
Guide Assembly	SS 304		
Shadow-Ring	Copper/ Silver/ None		
Plunger, Insert	SS 430		
Spring/ Circlip	SS 302/ Steel Plated		
Fasteners	SS 304		
Seat, Seals	NBR, Viton		

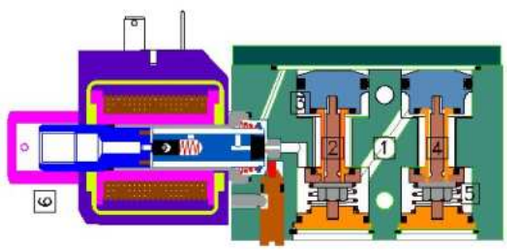

AMBIENT AND FLUID TEMPERATURE

-30 °C to 75 °C

SPECIAL VERSION AND SUFFIX

Suffix : (Valve) AM
Special version : (Solenoid) CO, FR, SS, LC, III

MEDIA

Air, Inert Gases

APPLICATION

Operation of double/ single acting actuator

PORT CONNECTION

INLET	OUTLET	OUTLET	EXHAUST	EXHAUST	PILOT EXHAUST
1	2	4	3	5	6

SPARES

(Refer page 25 for ordering code)

SPARE KIT	CODE
Seal Kit : Oring Set and Plunger Assembly	98
Repair Kit : Oring Set, Plunger Assembly, Fastener, Springs, Manual Override, Guide Assembly, Piston Kit	99
Solenoid Kit : Solenoid, Gasket	34

APPROVAL

(* applied for)

Approval	TYPE 4X, 6P	IP67	Ex d IIC T4 or T5 or T6 IP66	Ex ia IIC T6 IP67	DGMS	CCOE
		✓	✓	✓	✓	✓
CE		✓	✓	✓		
UL	✓		*			
CEPEL			✓	✓		
EAC			✓	✓		
IECEx			✓	✓		

Contact Rotex for
- Any other ambient, fluid temperature, media and application
- UL listed, c UL Listed general purpose Valve

ROTEX
Engineering For The Future

5/2, 3/2 CONVERTIBLE POPPET TYPE, NAMUR SOLENOID VALVE

SPECIFICATION

PORT CONNECTION			PRE-SSURE bar						BODY MATERIAL AND INTERNALS				SEALS					MANUAL OVERRIDE			SOLENOID ENCLOSURE						OUTLET PORT	POWER VA			
																					WEATHER PROOF			EXPLOSION PROOF						
SIZE	BSP(F)	NPT(F)	MINIMUM	MAXIMUM	ORIFICE (mm)	FLOW FACTOR kv (LPM OF WATER @ 1 bar ΔP)	VALVE TYPE	PILOT PRESSURE	ALUMINIUM	ALUMINIUM + SS	BRASS (STD. PORT NPT)	SS 316 (STD. PORT NPT)	NBR	Viton	EPDM	HYTREL	PTFE	NIL	STAYPUT CUM MOMENTARY	MOMENTARY	FLYING LEAD	PLUG IN, IP67	SQ. PLUG IN, IP67	TERMINAL BOX IP67	EXPLOSION PROOF IIC, IP67	LARGE ENCLOSURE	SOLENOID SIZE	NAMUR	AC INRUSH	AC HOLDING	DC	CONSTRUCTION REFERENCE NUMBER
5/2, 3/2 CONVERTIBLE SINGLE SOLENOID																																
1/4”	2G	2R	2	10	6	12	51424		※	B1		B5	※	S2				M0	※	M8		22		T	E		14	2	18	12	8	N11

Cable Entry	T	E												
		Ex d			Ex a			Ex emb						
M20 x 1.5	19	39	87M	S66M	S58M	S58M	S58LTM	S
M25 x 1.5			87	66	58	58LT		
1/2” NPT	16	37	87N	S66N	S58N	S58N	S58LTN	S

※ = Do not specify when opted for. Refer Page # 22 for Value of ※

ORDERING CODE, EXAMPLE

VALVE + SOLENOID

TYPE – SUFFIX – ORIFICE – PORT CONNECTION – BODY AND INTERNALS – MANUAL OVERRIDE – SEAL- MEDIA + SIZE – VOLTAGE – CURRENT – SOLENOID ENCLOSURE – SPECIAL VERSION – POWER – INSULATION – APPROVAL

e.g. 51424-6-2G+I-230V 50Hz-22-H

DIMENSIONS

All Dimensions are in mm

CONSTRUCTION REFERENCE N11

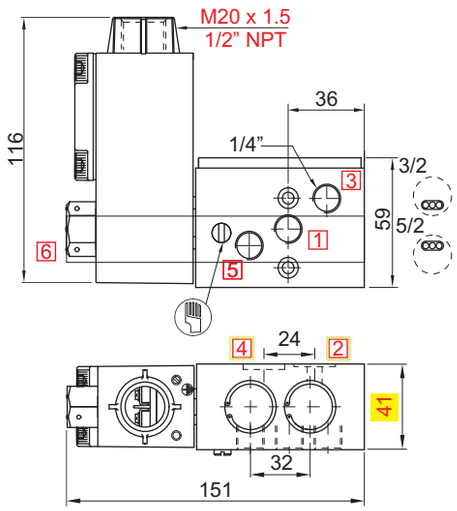

TERMINAL BOX/ Ex d TYPE 16, 19, 37, 39, 58, 58LT

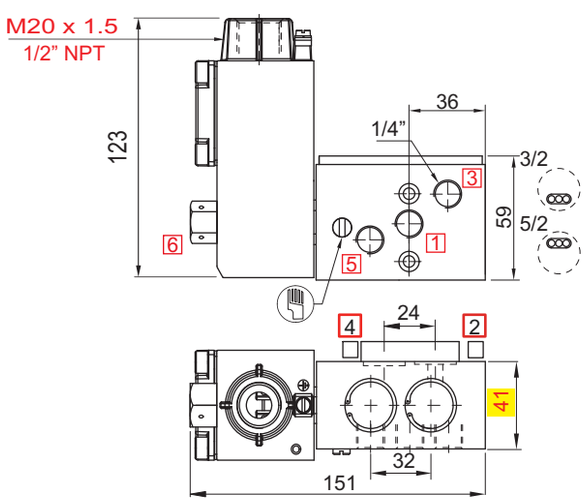

TERMINAL BOX/ Ex d LARGE ENCLOSURE, TYPE 16, 19, 37, 39, 58, 58LT

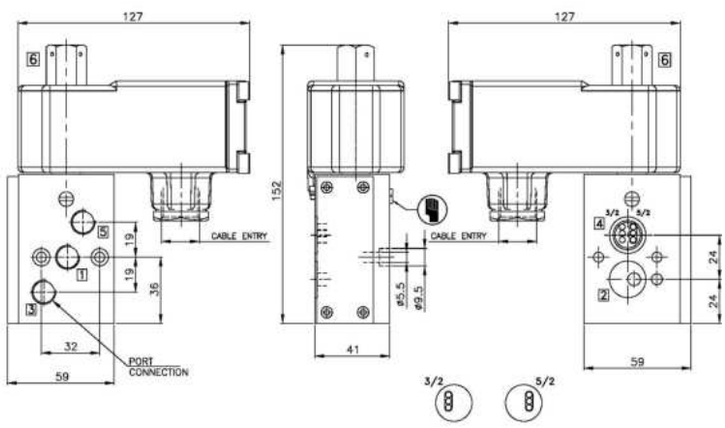

BCE SOLENOID/ Ex d TYPE 87

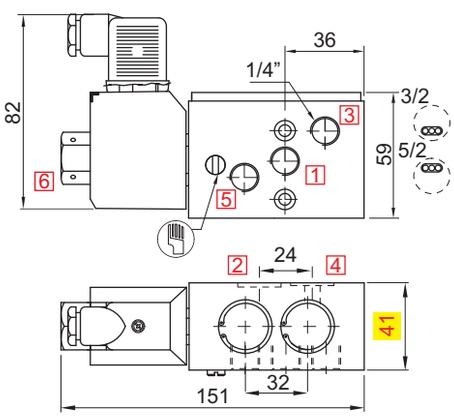

PLUG IN SOLENOID TYPE 22/ 25

11

Specifications are subject to change without notice

5/2, 3/2 CONVERTIBLE POPPET TYPE, NAMUR SOLENOID VALVE

TYPE	PRESSURE

TYPE	PRESSURE
57442	2 - 10 bar

BI STABLE

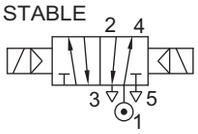

TYPE	PRESSURE
51442	2 - 10 bar

MONO

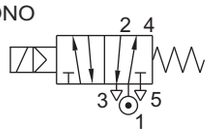



Match Slot to 5/2 for 5/2



Match Slot to 3/2 for 3/2



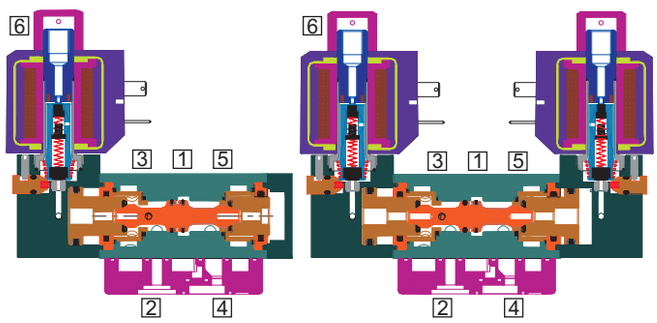

THIS MODEL IS DISCONTINUED.

OFFER ALTERNATE MODEL 51450, 57450

CONTACT ROTEX IF MUST TO OFFER SPECIFIC

ROTEX
Engineering For The Future

5/2, 3/2 CONVERTIBLE INLINE POPPET, NAMUR SOLENOID VALVE

TYPE	PRESSURE

TYPE	PRESSURE
57450V02	10 bar

BI STABLE

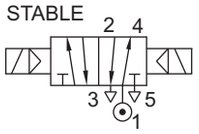

TYPE	PRESSURE
51450V02	10 bar

MONO

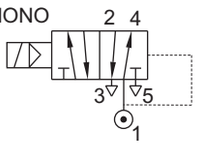



Match Slot to 5/2 for 5/2



Match Slot to 3/2 for 3/2



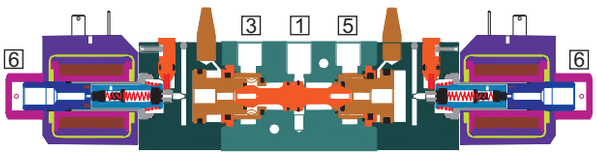

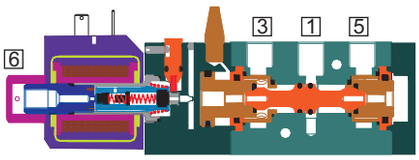

REFER CATALOGE BOOK OF

51450V02, 57450V02

5/2, 3/2 CONVERTIBLE SPOOL TYPE, NAMUR SINGLE/ DOUBLE SOLENOID VALVE

TYPE	PRESSURE
VAD214NC	2 - 10 bar

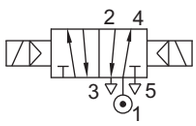

TYPE	PRESSURE
VAD213NC	3.5 - 10 bar

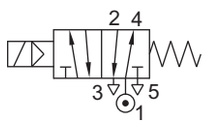

FEATURES

- High flow NW 5.3, kv=10 lpm@1bar
- Avoid water/ rain splashing on the solenoid
- Best suited for indoor application



Match Slot 4 for 5/2



Match Slot 2 for 3/2



WETTED PARTS

Code	※
Body	Anodized Aluminium
Internals	Aluminium, Brass
Guide Assembly	Brass
Shadow-Ring	Copper
Plunger, Insert	SS 430
Spring	SS 302
Fasteners	SS 304
Seat, Seals	NBR

AMBIENT AND FLUID TEMPERATURE

-30 °C to 75 °C

MEDIA

Air, Inert Gases

APPLICATION

Operation of double/ single acting actuator

PORT CONNECTION

INLET	OUTLET	OUTLET	EXHAUST	EXHAUST	PILOT EXHAUST
1	2	4	3	5	6

SPARES

(Refer page 25 for ordering code)

SPARE KIT	CODE
Seal Kit : Oring Set and Plunger Assembly	98
Repair Kit : Oring Set, Plunger Assembly, Fastener, Springs, Manual Override Guide Assembly	99
Solenoid Kit : Solenoid, Gasket	34

APPROVAL

(* applied for)

Approval	TYPE 4X, 6P	IP67	Ex d IIC T4 or T5 or T6 IP66	Ex ia IIC T6 IP67	DGMS	CCOE
ISI		✓				
CE		✓				
UL						
CMIM						
EAC						
TECEX						

Contact Rotex for
- Any other ambient, fluid temperature, media and application

Recommended for indoor application.
Due to PTFE sealing valve may have small leakage across the port.

ROTEX
Engineering For The Future

5/2, 3/2 CONVERTIBLE SPOOL TYPE, NAMUR SINGLE/ DOUBLE SOLENOID VALVE

SPECIFICATION

PORT CONNECTION			PRE-SSURE bar						BODY MATERIAL AND INTERNALS				SEALS				MANUAL OVERRIDE			SOLENOID ENCLOSURE							OUTLET PORT	POWER VA			CONSTRUCTION REFERENCE NUMBER
																				WEATHER PROOF				EXPLOSION PROOF							
SIZE	BSP(F)	NPT(F)	MINIMUM	MAXIMUM	ORIFICE (mm)	FLOW FACTOR kv (LPM OF WATER @ 1 bar ΔP)	VALVE TYPE	PILOT PRESSURE	ALUMINIUM	ALUMINIUM + SS	BRASS (STD. PORT NPT)	SS 316 (STD. PORT NPT)	NBR	Viton	EPDM	PTFE	NIL	STAYPUT CUM MOMENTARY	MOMENTARY	FLYING LEAD	PLUG IN, IP67	SQ. PLUG IN, IP67	TERMINAL BOX IP67	FP JB Ex d IIC, T4 OR T6, IP67	LARGE ENCLOSURE	SOLENOID SIZE	NAMUR	AC INRUSH	AC HOLDING	DC	
5/2, 3/2 CONVERTIBLE SINGLE SOLENOID																															
1/4"	2G	2R	3.5	10	5	10	VAD213NC		※				※					※									8	2	12	6	5	N20
5/2, 3/2 CONVERTIBLE DOUBLE SOLENOID																															
1/4"	2G	2R	2	10	5	10	VAD214NC		※				※					※									8	2	12	6	5	N20

※ = Do not specify when opted for. Refer Page # 22 for Value of ※

ORDERING CODE, EXAMPLE

VALVE + SOLENOID

TYPE - ORIFICE - PORT CONNECTION - BODY AND INTERNALS - MANUAL OVERRIDE - SEAL - MEDIA + VOLTAGE - CURRENT - SOLENOID ENCLOSURE - INSULATION

e.g. VAD213NC+24V DC

DIMENSIONS

All Dimensions are in mm

CONSTRUCTION REFERENCE N19

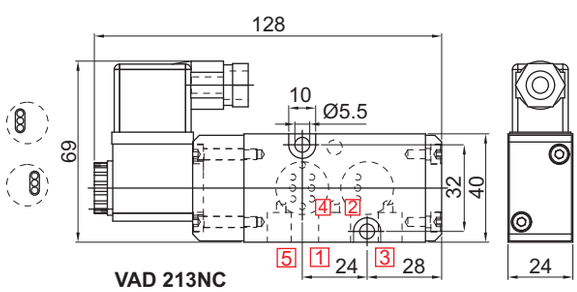

VAD 213NC

PLUG IN SOLENOID TYPE 22

CONSTRUCTION REFERENCE N20

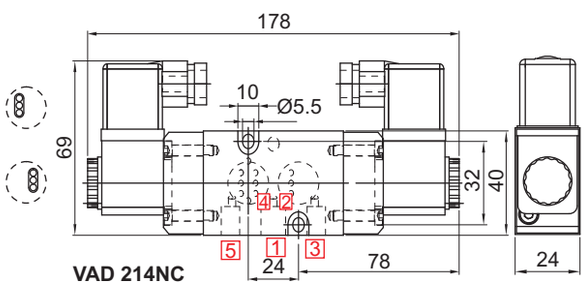

VAD 214NC

PLUG IN SOLENOID TYPE 22

11

5/2, 3/2 CONVERTIBLE WITH INTEGRAL FLOW CONTROL, NAMUR SOLENOID VALVE

TYPE	PRESSURE
VAD214NCFC	2 - 10 bar

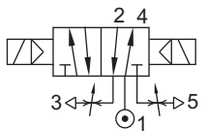

TYPE	PRESSURE
VAD213NCFC	3.5 - 10 bar

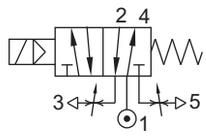

SINGLE/ DOUBLE SOLENOID VALVE

FEATURES

- High flow NW 5.3, kv=10 lpm@1bar
- Best suited for indoor application
- Best suited where speed regulation is desired
- Avoid rain/ water splashing on the solenoid



Match Slot 4 for 5/2



Match Slot 2 for 3/2



WETTED PARTS

Code	※
Body	Anodized Aluminium
Internals	Aluminium, Brass
Guide Assembly	Brass
Shadow-Ring	Copper
Plunger, Insert	SS 430
Spring	SS 302
Fasteners	SS 304
Seat, Seals	NBR

AMBIENT AND FLUID TEMPERATURE

-30 °C to 75 °C

MEDIA

Air, Inert Gases

APPLICATION

Operation of double/ single acting/ actuator

PORT CONNECTION

INLET	OUTLET	OUTLET	EXHAUST	EXHAUST	PILOT EXHAUST
1	2	4	3	5	6

SPARES

(Refer page 25 for ordering code)

SPARE KIT	CODE
Seal Kit : Oring Set and Plunger Assembly	98
Repair Kit : Oring Set, Plunger Assembly, Fastener, Springs, Manual Override Guide Assembly	99
Solenoid Kit : Solenoid, Gasket	34

APPROVAL

(* applied for)

Approval	TYPE 4X, 6P	IP67	Ex d IIC T4 or T5 or T6 IP66	Ex ia IIC T6 IP67	DGMS	CCOE
		✓				
CE		✓				
UL						
EAC						

Contact Rotex for
- Any other ambient, fluid temperature, media and application

Recommended for indoor application.
Due to PTFE sealing valve may have small leakage across the port.

ROTEX
Engineering For The Future

5/2, 3/2 CONVERTIBLE SPOOL TYPE, WITH INTEGRAL FLOW CONTROL , SOLENOID NAMUR

SPECIFICATION

PORT CONNECTION			PRE-SSURE bar		ORIFICE (mm)	FLOW FACTOR kv (LPM OF WATER @ 1 bar ΔP)	VALVE TYPE	BODY MATERIAL AND INTERNALS				SEALS				MANUAL OVERRIDE			SOLENOID ENCLOSURE							OUTLET PORT	POWER VA			CONSTRUCTION REFERENCE NUMBER
																			WEATHER PROOF				EXPLOSION PROOF							
SIZE	BSP(F)	NPT(F)	MINIMUM	MAXIMUM				ALUMINIUM	ALUMINIUM + SS	BRASS (STD. PORT NPT)	SS 316 (STD. PORT NPT)	NBR	Viton	EPDM	PTFE	NIL	STAYPUT CUM MOMENTARY	MOMENTARY	FLYING LEAD	PLUG IN, IP67	SQ. PLUG IN, IP67	TERMINAL BOX IP67	FP JB Ex d IIC, T4 OR T6, IP67	LARGE ENCLOSURE	SOLENOID SIZE	NAMUR	AC INRUSH	AC HOLDING	DC	
5/2, 3/2 CONVERTIBLE SINGLE SOLENOID																													
1/4"	2G	2R	3.5	10	5	10	VAD213NCFC	※				※					※									8	2	18	12	8	N21
5/2, 3/2 CONVERTIBLE DOUBLE SOLENOID																													
1/4"	2G	2R	2.0	10	5	10	VAD214NCFC	※				※					※									8	2	18	12	8	N22

※ = Do not specify when opted for. Refer Page # 22 for Value of ※

ORDERING CODE, EXAMPLE

VALVE + SOLENOID

TYPE – ORIFICE – PORT CONNECTION – BODY AND INTERNALS – MANUAL OVERRIDE – SEAL - MEDIA + VOLTAGE - CURRENT – SOLENOID ENCLOSURE – APPROVAL - INSULATION

e.g. VAD 213NCFC+110V AC

DIMENSIONS

All Dimensions are in mm

CONSTRUCTION REFERENCE N21

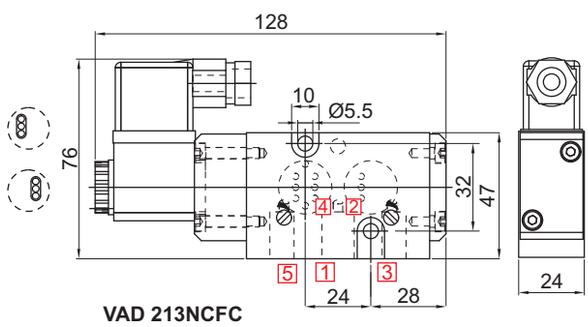

VAD 213NCFC

PLUG IN SOLENOID TYPE 22

CONSTRUCTION REFERENCE N22

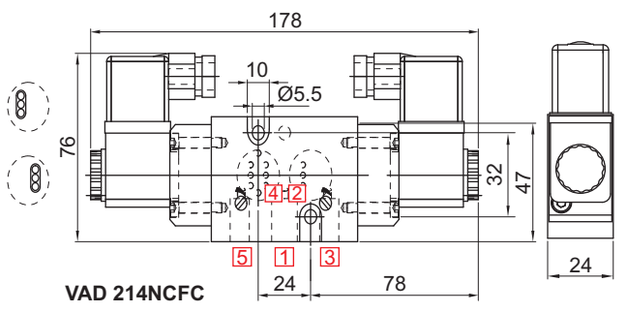

VAD 214NCFC

PLUG IN SOLENOID TYPE 22

11

Specifications are subject to change without notice

2

SERIES : 32D

3/2 DIRECT ACTING LOW POWER, NAMUR SOLENOID VALVE

TYPE	PRESSURE

TYPE	PRESSURE

TYPE	PRESSURE
30318LW1.8	0 - 10 bar
30318LW5	0 - 10 bar

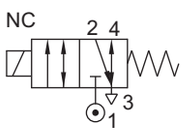



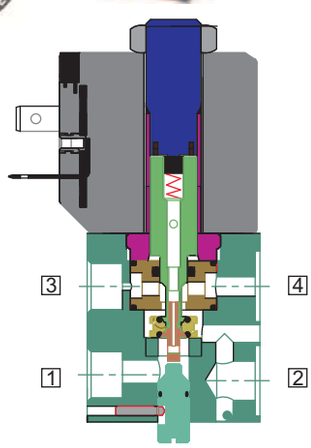

REFER CATALOGE BOOK OF

30318LW

SERIES : 32D

3/2 DIRECT ACTING REGULATING, LOW POWER, NAMUR SOLENOID VALVE

TYPE	PRESSURE

TYPE	PRESSURE

TYPE	PRESSURE
30138LA	0 - 10 bar

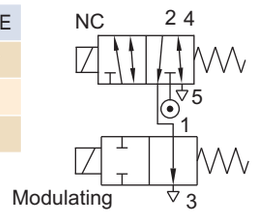

FEATURES

- Most suited for stopping spring return actuator at mid position set through limit switch
- Air or Power failure to return
- Solenoid can be operated directly or through PID Controller
- Ideal for modulating application
- Dust cap provided on the exhaust port



WETTED PARTS

Code	※	B1	B5
Body	Anodized Aluminium	Anodized Aluminium	SS 316
Internals	Aluminium, Brass and SS 316	SS 316	SS 316
Guide Assembly	SS 304		
Shadow-Ring	Copper/ Silver/ None		
Plunger, Insert	SS 430		
Spring	SS 302		
Fasteners	SS 304		
Seat, Seals	NBR, Viton, Viton GLT, F. Silicon		

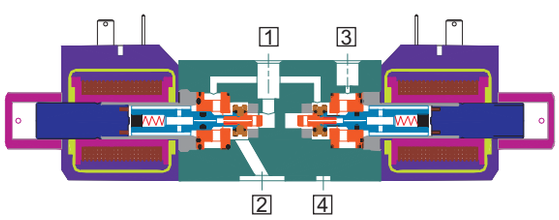

AMBIENT AND FLUID TEMPERATURE

-30 °C to 75 °C

SPECIAL VERSION AND SUFFIX

Suffix : (Valve) AM
Special version : (Solenoid) CO, FR, SS, III

MEDIA

Air, Inert Gases

APPLICATION

Operation of single acting actuator

PORT CONNECTION

INLET	OUTLET	OUTLET	EXHAUST	EXHAUST
1	2	4	3	5

SPARES (Refer page 25 for ordering code)

SPARE KIT	CODE
Seal Kit : Oring Set and Plunger Assembly	98
Repair Kit : Oring Set, Plunger Assembly, Fastener, Springs, Manual Override, Guide Assembly, Piston Kit	99
Solenoid Kit : Solenoid, Gasket	34

APPROVAL (* applied for)

Approval	TYPE 4X, 6P	IP67	Ex d IIC T4 or T5 or T6 IP66	Ex ia IIC T6 IP67	DGMS	CCOE
ISI		✓	✓		✓	✓
CE		✓	✓			
UL	✓		*			
CMRI			✓			
EAC			✓			
IECEx			✓			

Contact Rotex for
- Any other ambient, fluid temperature, media and application
- UL listed, c UL Listed general purpose Valve

⚠ For Valve type 30138 operated with AC voltage select in built full rectified solenoid with FR option

ROTEX
Engineering For The Future

3/2 DIRECT ACTING REGULATING, LOW POWER, NAMUR SOLENOID VALVE

SPECIFICATION

PORT CONNECTION			PRE-SSURE bar		ORIFICE (mm)	FLOW FACTOR kv (LPM OF WATER @ 1 bar ΔP)	VALVE TYPE	PILOT PRESSURE	BODY MATERIAL AND INTERNALS				SEALS				MANUAL OVERRIDE			SOLENOID ENCLOSURE							OUTLET PORT	POWER VA			CONSTRUCTION REFERENCE NUMBER
																				WEATHER PROOF			EXPLOSION PROOF								
SIZE	BSP(F)	NPT(F)	MINIMUM	MAXIMUM					ALUMINIUM	ALUMINIUM + SS	BRASS (STD. PORT NPT) SS 316 (STD. PORT NPT)		NBR	Viton	Viton GLT	F. Silicon	NIL	STAYPUT CUM MOMENTARY	MOMENTARY	FLYING LEAD	PLUG IN, IP67	SQ. PLUG IN, IP67	TERMINAL BOX IP67	EXPLOSION PROOF IIC, IP67	LARGE ENCLOSURE	SOLENOID SIZE	NAMUR	AC INRUSH	AC HOLDING	DC	
3/2 LOW POWER FOR REGULATING APPLICATIOIN																														
1/4”	2G	2R	0	10	5	8	30138LA		※	B1		B5	※	S2	S2GS19		※					25	T	E		14	2	3.5	3.5	3.5	N24

Cable Entry	T	E									
		Ex d						Ex emb			
M20 x 1.5	19	39	87	MS				58	MS	58	LTMS
M25 x 1.5			87					58		58	LT
1/2” NPT	16	37	87	NS				58	NS	58	LTNS

※ = Do not specify when opted for. Refer Page # 22 for Value of ※

ORDERING CODE, EXAMPLE

VALVE + SOLENOID

TYPE – SUFFIX – ORIFICE – PORT CONNECTION – BODY AND INTERNALS – MANUAL OVERRIDE – SEAL - MEDIA + SIZE – VOLTAGE – CURRENT – SOLENOID ENCLOSURE – SPECIAL VERSION – POWER – INSULATION – APPROVAL

e.g. 30138LA-5-2R+III-220V-AC/DC-16-FR-LW3.5-H

DIMENSIONS

All Dimensions are in mm

CONSTRUCTION REFERENCE N24

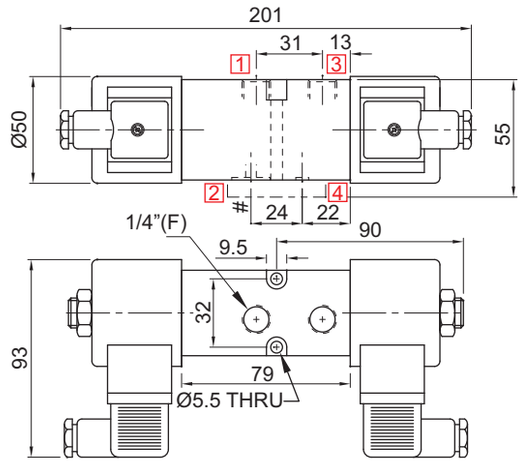

PLUG IN SOLENOID SIZE 25

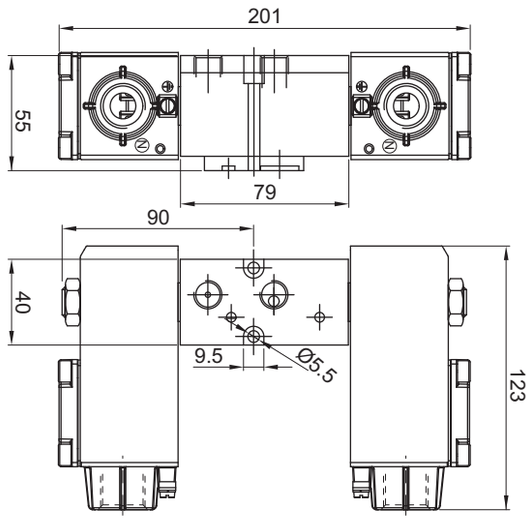

TERMINAL BOX/ Ex d TYPE 16, 19, 37, 39, 58, 58LT

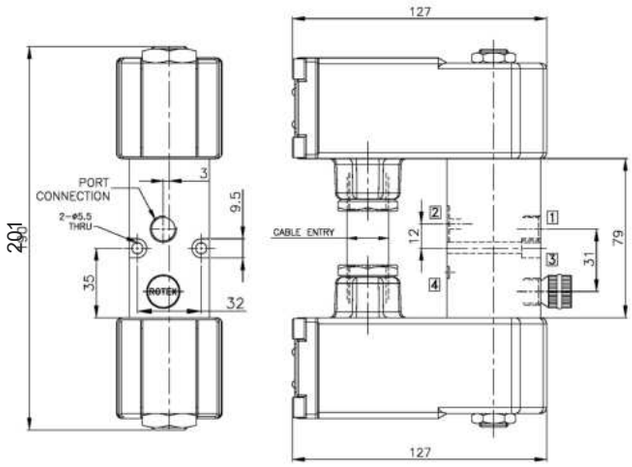

BCE SOLENOID SIZE 87

Specifications are subject to change without notice

ROTEX
Engineering For The Future

5/2, 3/2 CONVERTIBLE LOW POWER, NAMUR SOLENOID VALVE

TYPE	PRESSURE

TYPE	PRESSURE
57450V02LW	10 bar

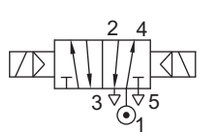

TYPE	PRESSURE
51450V02LW	10 bar

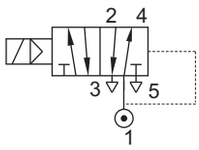



Match Slot to 5 for 5/2



Match Slot to 3 for 3/2



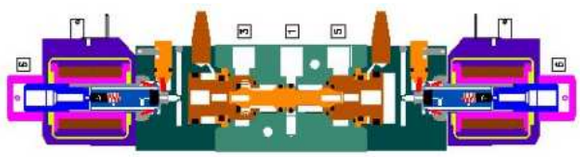

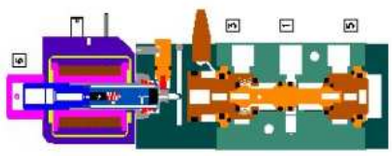

REFER CATALOGE BOOK OF

51450V02LW, 57450V02LW

5/2, 3/2 CONVERTIBLE INTRINSICALLY SAFE, NAMUR SOLENOID VALVE

TYPE	PRESSURE

TYPE	PRESSURE

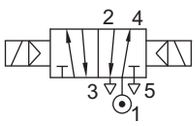

TYPE	PRESSURE
51442IS	2 - 8 bar

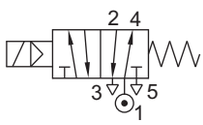



Match Slot to 5/2 for 5/2



Match Slot to 3/2 for 3/2



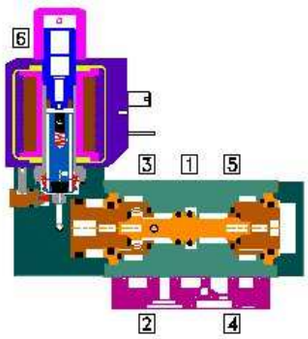

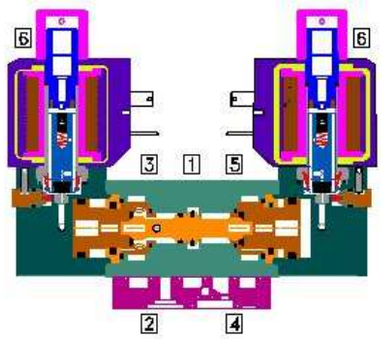

THIS MODEL IS DISCONTINUED.
OFFER ALTERNATE MODEL 51450IS.
CONTACT ROTEX IF MUST TO OFFER SPECIFIC

5/2, 3/2 CONVERTIBLE INTRINSICALLY SAFE, NAMUR SOLENOID VALVE

TYPE	PRESSURE

TYPE	PRESSURE
57450V02IS	2 - 11 bar
57450IS	2 - 11 bar

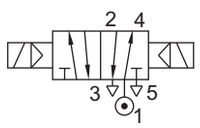

TYPE	PRESSURE
51450V02IS	2 - 11 bar
51450IS	2 - 11 bar

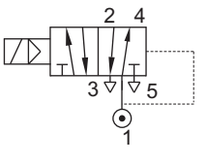



Match Slot to 5 for 5/2



Match Slot to 3 for 3/2



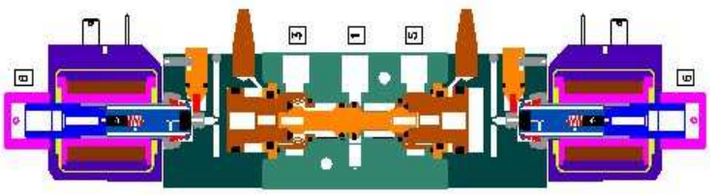

REFER CATALOGE BOOK OF

51450V02IS, 57450V02IS

5/2, 3/2, CONVERTIBLE INTRINSICALLY SAFE, NAMUR SOLENOID VALVE





FEATURES

- Ideally suited where speed control by blocking exhaust is desired
- Power fail to reset
- Non return plug provided on the exhaust port
- In 3/2 mode exhaust purged to spring chamber

AMBIENT TEMPERATURE

-20 ºC to 70 ºC

FLUID TEMPERATURE

-20 ºC to 70 ºC

MEDIA

Air, Inert Gases

APPLICATION

Operation of double/ single acting actuator

SPECIAL VERSION AND SUFFIX

Suffix : (Valve) AM, WO
Special version : (Solenoid) CO Regulating

SPARES

(Refer page 25 for ordering code)

SPARE KIT	CODE
Seal Kit : Oring Set and Plunger Assembly	98
Repair Kit : Oring Set, Plunger Assembly, Fastener, Springs, Manual Override	99
Solenoid Kit : Solenoid, Gasket	34

APPROVAL

(* applied for)

Approval	Nema 4X	IP67	Ex d IIC T4 or T5 or T6 IP66	Ex ia IIC T6 IP67	DGMS	CCOE
		✓	✓	✓	✓	✓
CE		✓	✓	✓		
UL	✓		*			
CCEPEL			✓	✓		
PC			✓	✓		
IECEx			✓	✓		

PORT CONNECTION

TYPE	ACTION	INLET	OUTLET	OUTLET	EXHAUST	EXHAUST	PILOT EXHAUST
LOW POWER SOLENOID VALVE							
30106	NC	1	2	4	3		
51450V02	Single	1	2	4	3	5	6
51450	Single	1	2	4	3	5	6
57450V02	Double	1	2	4	3	5	6
57450	Double	1	2	4	3	5	6

ROTEX
Engineering For The Future

5/2, 3/2 CONVERTIBLE INTRINSICALLY SAFE, NAMUR SOLENOID VALVE

SPECIFICATION

PORT CONNECTION			PRE-SSURE bar		ORIFICE (mm)	FLOW FACTOR kv (LPM OF WATER @ 1 bar ΔP)	VALVE TYPE	PILOT PRESSURE	BODY MATERIAL AND INTERNALS				SEALS					MANUAL OVERRIDE			SOLENOID ENCLOSURE EXPLOSION PROOF Ex ia (d) IIC,T6,IP67						OUTLET PORT	POWER VA			CONSTRUCTION REFERENCE NUMBER
SIZE	BSP(F)	NPT(F)	MINIMUM	MAXIMUM					ALUMINIUM	ALUMINIUM + SS	BRASS (STD. PORT NPT)	SS 316 (STD. PORT NPT)	NBR	Viton	EPDM	HYTREL	F. Silicon	NIL	STAYPUT CUM MOMENTARY	MOMENTARY		SQ. PLUG IN, IP67	TERMINAL BOX IP67	EXPLOSION PROOF IIC, IP67	LARGE ENCLOSURE	SOLENOID SIZE	NAMUR	AC INRUSH	AC HOLDING	DC	
3/2 FOR ON/ OFF APPLICATION																															
1/4”	2G	2R	0	16	1.6	1.6	30106		※			B5	※	S2			S19	M0	※	M8				I		14	1 or 2			0.4	N31
			0	10	1.8	1.8	30106		※			B5	※	S2			S19	M0	※	M8				I		14	1 or 2			0.4	N31
			0	8	2.2	2.5	30106		※			B5	※	S2			S19	M0	※	M8				I		14	1 or 2			0.4	N31
			0	6	2.5	3.0	30106		※			B5	※	S2			S19	M0	※	M8				I		14	1 or 2			0.4	N31
5/2, 3/2 CONVERTIBLE SINGLE SOLENOID																															

REFER SMALL BOOK

Cable Entry	Ex ia	
M20 x 1.5	66MS	67MS
M25 x 1.5	66	67
1/2” NPT	66NS	67NS

※ = Do not specify when opted for. Refer Page # 22 for Value of ※

ORDERING CODE, EXAMPLE

VALVE + SOLENOID

TYPE – SUFFIX – ORIFICE – PORT CONNECTION – BODY AND INTERNALS – MANUAL OVERRIDE – SEAL - MEDIA + VOLTAGE – CURRENT – SOLENOID ENCLOSURE – APPROVAL – INSULATION – SPECIAL VERSION

e.g. 30106-1.6-2R-III-24V-DC-66NS-01

5/2, 3/2 CONVERTIBLE INTRINSICALLY SAFE, NAMUR SOLENOID VALVE

DIMENSIONS

All Dimensions are in mm

CONSTRUCTION REFERENCE N31

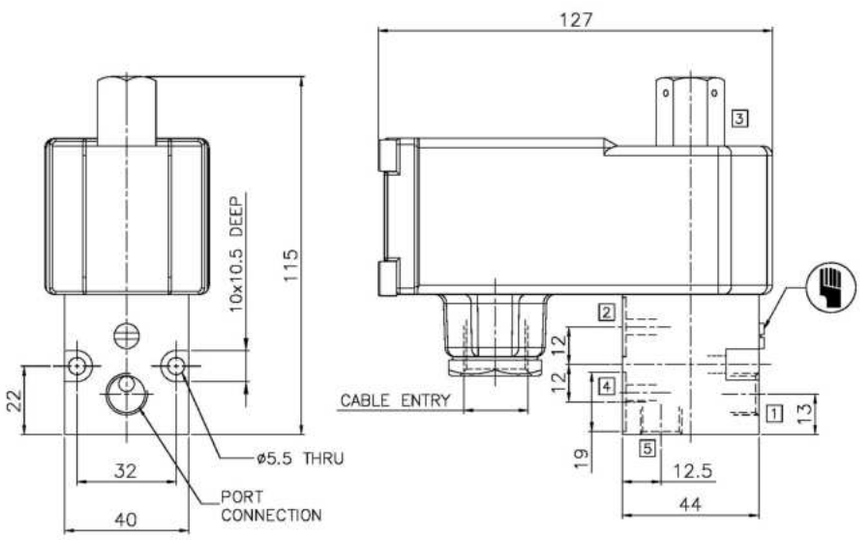

Ex ia SOLENOID WITH BOOSTER CIRCUIT

11

5/2, 3/2 CONVERTIBLE INTRINSICALLY SAFE, NAMUR SOLENOID VALVE

REFER SMALL CATALOGE BOOK

DESIGN FEATURES : PULSE JET VALVE

FEATURES

- Hytrel Diaphragm for longer life
- Vent protected by silencer
- Life >10 million cycle
- High flow factor for effective cleaning
- Lower air consumption/ Pulse
- Pressure Die Cast epoxy coated Aluminium/ Stainless Steel cast Body
- Unique profile of the Diaphragm eliminates spring
- Profiled seat to avoid dust/ particle trapping while closing
- Stainless Steel Fasteners
- Valve can be mounted in any position
- For Corrosion resistance Stainless Steel cast Weather/ Explosion Proof Solenoid
- Low decibel noise level
- Low Solenoid Power



FEATURES

- Hytrel Diaphragm for longer life
- Dual Diaphragm for quick ON and OFF response
- Pilot vent protected by silencer
- Life >10 million cycle
- High flow factor for effective cleaning
- Lower air consumption/ Pulse
- Pressure Die Cast epoxy coated Aluminium/ Stainless Steel cast Body
- Unique profile of the Diaphragm eliminates spring
- Profiled seat to avoid dust/ particle trapping while closing
- Stainless Steel Fasteners
- Valve can be mounted in any position
- For Corrosion resistance Stainless Steel cast Weather/ Explosion Proof Solenoid
- Low decibel noise level
- Low Solenoid Power



ROTEX
Engineering For The Future

PULSE JET VALVE

DEFINITION

t1 = time to peak pressure (Lower means fast opening)
t2 = minimum electrical pulse
t3 = time for 50% peak pressure (Lower means fast opening)
t4 = time to full close from removal of electrical signal response OFF time (Lower means lower air consumption / operation)
PPR = ratio of peak pressure to tank pressure (Higher means fast operation of the valve, efficient cleaning of the bag)
P = peak pressure (Higher means effective cleaning of the bag)

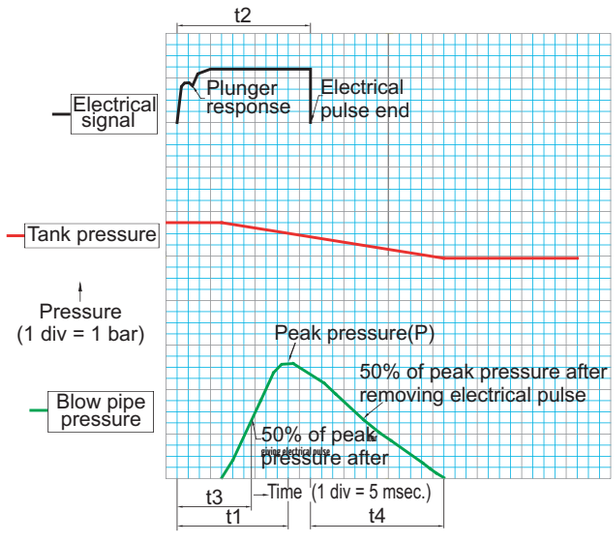

TEST SET-UP

Equipment used :
1 Valve under test
2 Adjustable timer, power supply
3 Pressure Transducer 1 measuring blow pipe pressure
4 Pressure Transducer 2 measuring tank pressure
5 Digital Oscilloscope
6 Volume Tank

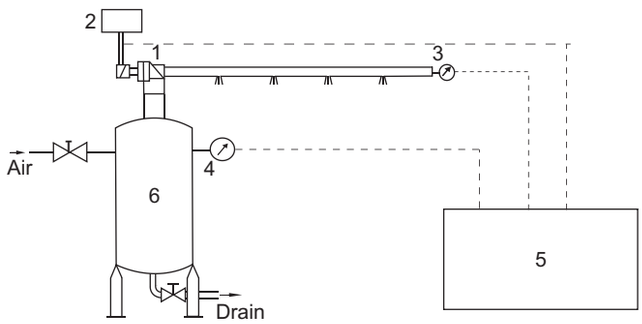

TECHNICAL COMPARISON

MANUFACTURER	ROTEX	A	B
Tank volume	24dm^3	24dm^3	24dm^3
Tank pressure	6 bar(g)	6 bar(g)	6 bar(g)
Electrical pulse length (t2)	60 msec.	60 msec.	60 msec.
Peak pressure (p)	5.20 bar(g)	4.90 bar(g)	4.60 bar(g)
Time to peak pressure (t1)	48 msec.	53msec.	58 msec.
Opening time-50% pp(t3)	34 msec.	34 msec.	38 msec.
Closing time (t4)	60 msec.	120 msec.	90 msec.
Pressure drop tank	1.6 bar(g)	2.1 bar(g)	1.8 bar(g)
Performance ratio	86.66%	81.66%	76.66%

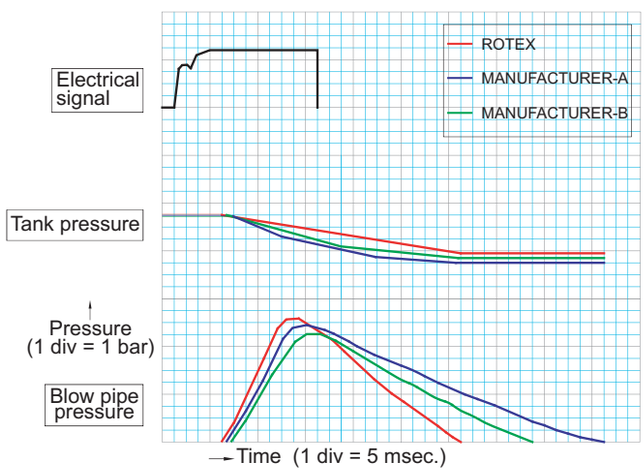

METHOD OF COMPARISON AT SITE

1 Charge tank to the required pressure
2 Adjust - electrical switch ON pulse starting from minimum increased till effective cleaning of the bags.
3 Charge tank to the required pressure
4 Block Air supply to the Tank
5 Apply a Pulse as adjusted in Step - 2
6 Measure Tank pressure after pulse
7 Calculate Tank pressure drop (air consumption) per pulse for effective cleaning. Lower pressure drop means lower Air consumption per pulse
8 The valve having lower pressure drop and hence less air consumption, still providing equivalent cleaning means a better in performance

Specifications are subject to change without notice

28 NB PULSE JET SOLENOID VALVE

TYPE	PRESSURE

TYPE	PRESSURE

TYPE	PRESSURE
24108	0.5 - 8.5 bar
24108ET	0.5 - 8.5 bar

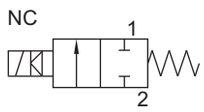

FEATURES

- Hytrel Diaphragm
- Larger exhaust area protected with silencer for reducing noise
- Solenoid capable of turning 360º



WETTED PARTS

Code	※	B12
Body and Internals	Aluminium Die Cast	SS 316 Cast
Guide Assembly	SS 304	
Shadow-Ring	Copper	
Plunger, Insert	SS 430	
Diaphragm	TPU, Viton	
Fasteners	SS 304	
Seat, Seals	TPU, Viton, PTFE	

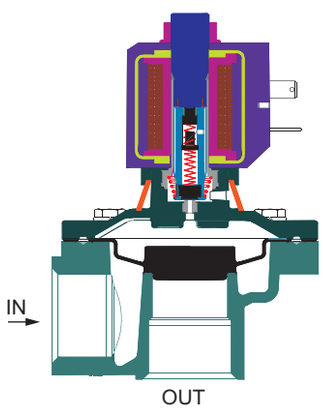

SPECIFICATION

RESPONSE TIME 30 ms
MINIMUM ELECTRICAL PULSE 50 ms

AMBIENT TEMPERATURE

-5 ºC to 85 ºC

FLUID TEMPERATURE

-5 ºC to 85 ºC

SPECIAL VERSIONS AND SUFFIX

Suffix : (Valve) AM
Special versions : (Solenoid) CO, FR, SS

PORT CONNECTION

FUNCTION	INLET	OUTLET
NC	2	1

SPARES

(Refer page 25 for ordering code)

SPARE KIT	CODE
Diaphragm Kit : Diaphragm Kit	100
Seal Kit : Oring Set, Diaphragm Kit, Plunger Assembly	98
Repair Kit : Oring Set, Diaphragm Kit, Plunger Assembly, Fastener, Springs, Silencer, Guide Assembly	99
Solenoid Kit : Solenoid, Gasket	34

APPROVAL

(* applied for)

Approval	TYPE 4X, 6P	IP67	Ex d IIC T4 or T5 or T6 IP66	Ex ia IIC T6 IP67	DGMS	CCOE
ISI		✓	✓		✓	✓
CE		✓	✓			
UL	✓		*			
CCPEL			✓			
EAC			✓			
IECEx			✓			

Contact Rotex for

- Any other Ambient, Fluid Temperature, Media and application

ROTEX
Engineering For The Future

28 NB PULSE JET SOLENOID VALVE

SPECIFICATION

PORT CONNECTION			PRE-SSURE bar						BODY MATERIAL AND INTERNALS					SEALS				MANUAL OVERRIDE			SOLENOID ENCLOSURE								POWER VA			
																					WEATHER PROOF				EXPLOSION PROOF							
SIZE	BSP(F)	NPT(F)	MINIMUM	MAXIMUM	ORIFICE (mm)	FLOW FACTOR kv (LPM OF WATER @ 1 bar ΔP)	VALVE TYPE	PILOT PRESSURE	ALUMINIUM	ALUMINIUM + SS	BRASS (STD. PORT NPT)	CF8M (STD. PORT NPT)	NBR	Viton (S2)/ Viton+PTFE (S8)	EPDM	HYTREL	TPU	NIL	STAYPUT CUM MOMENTARY	MOMENTARY	FLYING LEAD	PLUG IN, IP67	SQ. PLUG IN, IP67	TERMINAL BOX IP67	EXPLOSION PROOF IIC, IP67	LARGE ENCLOSURE	SOLENOID SIZE			AC INRUSH	AC HOLDING	DC	CONSTRUCTION REFERENCE NUMBER
INTEGRAL PILOT																																
3/4"	6G	6R	0.5	8.5	28	280	24108		※				B12		S2			S25				22		T	E		14			18	12	8	P3
			0.5	8.5	28	280	24108ET		※				B12		S8							22		T	E		14			18	12	8	P3
1"	8G	8R	0.5	8.5	28	310	24108		※				B12		S2			S25				22		T	E		14			18	12	8	P3
			0.5	8.5	28	310	24108ET		※				B12		S8							22		T	E		14			18	12	8	P3

※ = Do not specify when opted for. Refer Page # 22 for Value of ※

Cable Entry	T	E									
		Ex d					Ex emb				
M20 x 1.5	19	39	87M	S			58M	S	58LTM	S	
M25 x 1.5			87				58		58LT		
1/2" NPT	16	37	87N	S			58N	S	58LTN	S	

ORDERING CODE, EXAMPLE

VALVE + SOLENOID

TYPE – ORIFICE – PORT CONNECTION – BODY AND INTERNALS – SEAL - MEDIA +
VOLTAGE - CURRENT – SOLENOID ENCLOSURE – POWER – INSULATION – APPROVAL
e.g. 24108-28-8G-S25+I-110V 50Hz-16, 24108ET-28-8G-S8+III-110V 50Hz-16-H

DIMENSIONS

All Dimensions are in mm

CONSTRUCTION REFERENCE P3

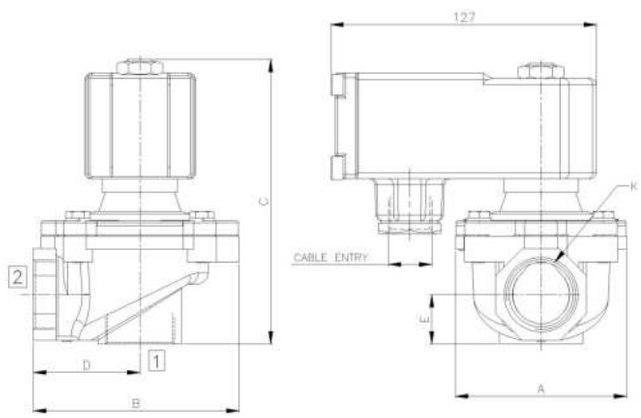

Ex ia SOLENOID WITH BOOSTER CIRCUIT

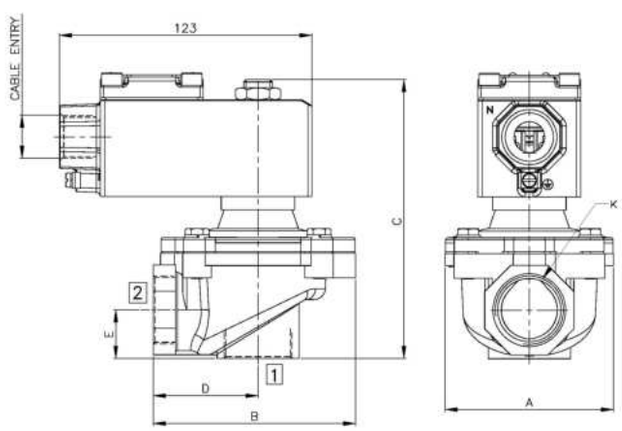

TERMINAL BOX/ Ex d TYPE 16, 19, 37, 39, 58, 58LT

VALVE TYPE	PIPE CONN.	A	B	C	D	E
24108-28	3/4"	82	99	139	51	24
24108-28	1"	82	99	139	51	24

VALVE TYPE	PIPE CONN.	A	B	C	D	E
24108ET-28	3/4"	82	99	139	51	24
24108ET-28	1"	82	99	139	51	24

Specifications are subject to change without notice

28 NB MINIATURE SOLENOID PULSE JET VALVE

TYPE	PRESSURE

TYPE	PRESSURE

TYPE	PRESSURE
24118	0.5 - 8.5 bar

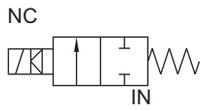



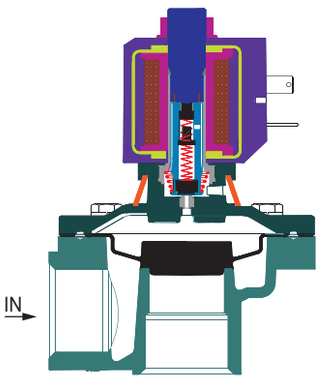

THIS MODEL IS DISCONTINUED.
OFFER ALTERNATE MODEL 24108.
CONTACT ROTEX IF MUST TO OFFER SPECIFIC

11

50 NB DOUBLE DIAPHRAGM, PULSE JET SOLENOID VALVE

TYPE	PRESSURE

TYPE	PRESSURE
24106	0.5 - 8.5 bar
24106A	0.5 - 8.5 bar
24106T	0.5 - 8.5 bar

TYPE	PRESSURE
24113	1.5 - 16 bar
24106ET	0.5 - 8.5 bar

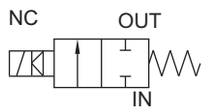

FEATURES

- Pulse jet valve with two diaphragm designed for large flow, fast ON and OFF response
- Unique profile of the diaphragm eliminates Spring
- Larger exhaust area for reducing noise
- Solenoid capable of turning 360°



WETTED PARTS

Code	※	B12
Body and Internals	Aluminium Die Cast	CF8M SS316 Cast
Guide Assembly	SS 304	
Shadow-Ring	Copper	
Plunger, Insert	SS 430	
Diaphragm	Hytrel, Viton, NBR	
Fasteners	SS 304	
Seat, Seals	NBR, Viton, PTFE	

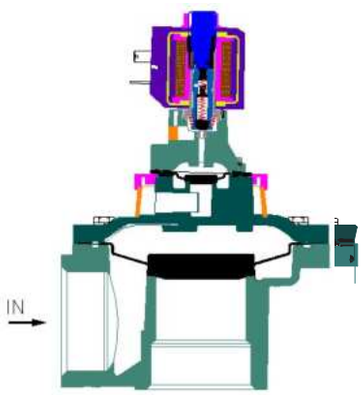

SPECIFICATION

RESPONSE TIME 25 ms
MINIMUM ELECTRICAL PULSE 40 ms

AMBIENT TEMPERATURE

-5 ºC to 85 ºC

FLUID TEMPERATURE

-5 ºC to 85 ºC

SPECIAL VERSION AND SUFFIX

Suffix : (Valve) AM
Special version : (Solenoid) CO, FR, SS

PORT CONNECTION

FUNCTION	INLET	OUTLET
NC	2	1

Contact Rotex for
- Any other ambient, fluid temperature, media and application

(Refer page 25 for ordering code)

SPARE KIT	CODE
Diaphragm Kit : Diaphragm Kit	100
Seal Kit : Oring Set, Diaphragm Kit Plunger Assembly	98
Repair Kit : Oring Set, Diaphragm Kit, Plunger Assembly, Fastener, Springs, Silencer, Guide Assembly	99
Solenoid Kit : Solenoid, Gasket	34

APPROVAL

(* applied for)

Approval	TYPE 4X, 6P	IP67	Ex d IIC T4 or T5 or T6 IP66	Ex ia IIC T6 IP67	DGMS	CCOE
ISI		✓	✓		✓	✓
CE		✓	✓			
UL	✓		*			
CCPEL			✓			
EAC			✓			
IECEx			✓			

ROTEX
Engineering For The Future

40/ 50 NB DOUBLE DIAPHRAGM, PULSE JET SOLENOID VALVE

SPECIFICATION

PORT CONNECTION			PRESSURE bar		ORIFICE (mm)	FLOW FACTOR kv (LPM OF WATER @ 1 bar ΔP)	VALVE TYPE	PILOT PRESSURE	BODY MATERIAL AND INTERNALS				SEALS				MANUAL OVERRIDE			SOLENOID ENCLOSURE								POWER VA			CONSTRUCTION REFERENCE NUMBER
																				WEATHER PROOF			EXPLOSION PROOF							
SIZE	BSP(F)	NPT(F)	MINIMUM	MAXIMUM					ALUMINIUM	ALUMINIUM + SS	BRASS (STD. PORT NPT)	CF8M/SS316 (STD. PORT NPT)	NBR	Viton (S2)/ Viton+PTFE (S8)	EPDM	HYTREL	PTFE	NIL	STAYPUT CUM MOMENTARY	MOMENTARY	FLYING LEAD	PLUG IN, IP67	SQ. PLUG IN, IP67	TERMINAL BOX IP67	EXPLOSION PROOF IIC, IP67	LARGE ENCLOSURE	SOLENOID SIZE			AC INRUSH	AC HOLDING	DC	
INTEGRAL PILOT																															
11/2"	12G	12R	0.5	8.5	52	1100	24106		※				S0	S2		※						22	25	T	E		14			18	12	8	P7
11/2"	12G	12R	0.5	8.5	52	1100	24106T		※				S0	S2		※						22	25	T	E		14			18	12	8	P7
11/2"	12G	12R	0.5	8.5	52	1100	24106A		※			B12	S0	S2		※						22	25	T	E		14			18	12	8	P7
11/2"	12G		1.5	16	52	1100	24113		※				S0	S2		※						22	25	T	E		14			18	12	8	P7
2"	16G	16R	0.5	8.5	52	1300	24106		※			B12	S0	S2		※						22	25	T	E		14			18	12	8	P7
2"	16G		0.5	8.5	65	1800	24106		※				S0	S2		※						22	25	T	E		14			18	12	8	P7
21/2"	20G	20R	0.5	8.5	65	2000	24106		※				S0	S2		※						22	25	T	E		14			18	12	8	P7
3"	24G	24R	0.5	8.5	80	2800	24106		※				S0	S2		※						22	25	T	E		14			18	12	8	P7
11/2"	12G	12R	0.5	8.5	52	1100	24106ET		※					S8								22	25	T	E		14			18	12	8	P7
11/2"	12G		0.5	8.5	52	1100	24106AET		※			B12		S8								22	25	T	E		14			18	12	8	P7
2"	16G	16R	0.5	8.5	52	1300	24106ET		※			B12		S8								22	25	T	E		14			18	12	8	P7
2"	16G		0.5	8.5	65	1800	24106ET		※					S8								22	25	T	E		14			18	12	8	P7
21/2"	20G	20R	0.5	8.5	65	2000	24106ET		※					S8								22	25	T	E		14			18	12	8	P7
3"	24G	24R	0.5	8.5	80	2800	24106ET		※					S8								22	25	T	E		14			18	12	8	P7

Cable Entry	T	E								
		Ex d					Ex emb			
M20 x 1.5	19	39	87MS				58MS	58LTMS		
M25 x 1.5			87				58	58LT		
1/2" NPT	16	37	87NS				58NS	58LTNS		

※ = Do not specify when opted for. Refer Page # 22 for Value of ※

ORDERING CODE, EXAMPLE

VALVE + SOLENOID

TYPE – ORIFICE – PORT CONNECTION – BODY AND INTERNALS – SEAL +
VOLTAGE – CURRENT – SOLENOID ENCLOSURE – POWER – INSULATION – APPROVAL
e.g. 24106-65-16G+I-230V-50Hz-16, 24106ET-65-16G-S8+I-230V-50Hz-16-H

DIMENSIONS

All Dimensions are in mm

CONSTRUCTION REFERENCE P7

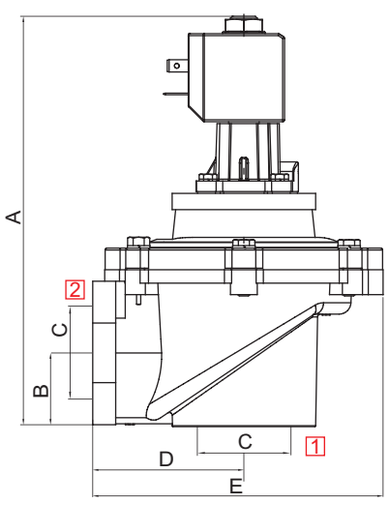

PLUG IN SOLENOID TYPE 22

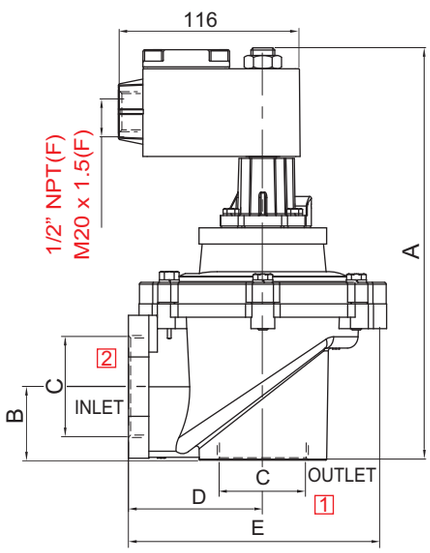

TERMINAL BOX/ Ex d TYPE 16, 19, 37, 39, 58, 58LT

VALVE TYPE	NW	PIPE CONN.	A	B	C	D	E
24106	52	11/2"	209	38.5	11/2"	79	151.5
24106T	52	11/2"	209	38.5	11/2"	79	151.5
24106	52	2"	220	38.5	2"	79	151.5
24106A	52	11/2"	202	32.5	11/2"	72	144.5
24106	65	2"	236	45	2"	96	180
24106	65	21/2"	236	45	21/2"	96	180
24113	52	11/2"	209	38.5	11/2"	79	151.5
24106ET	52	11/2"	209	38.5	11/2"	79	151.5
24106ET	52	2"	220	38.5	2"	79	151.5
24106AET	52	11/2"	202	32.5	11/2"	72	144.5
24106ET	65	2"	236	45	2"	96	180
24106ET	65	21/2"	236	45	21/2"	96	180
24106	80	3"	271	52.5	3"	105	205

Specifications are subject to change without notice

40 NB DOUBLE DIAPHRAGM, MINIATURE SOLENOID PULSE JET VALVE

TYPE	PRESSURE

TYPE	PRESSURE

TYPE	PRESSURE
24117	0.5 - 8 bar

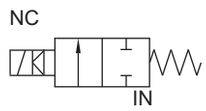



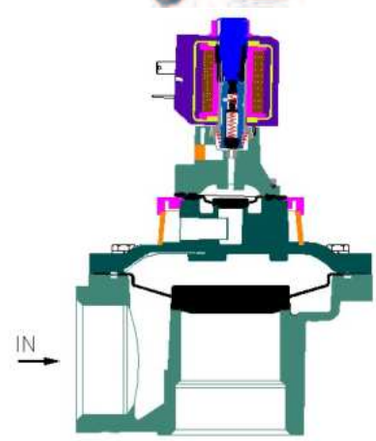

THIS MODEL IS DISCONTINUED.
OFFER ALTERNATE MODEL 24106.
CONTACT ROTEX IF MUST TO OFFER SPECIFIC M

25 NB DRESSER NUT PULSE JET SOLENOID VALVE

TYPE	PRESSURE

TYPE	PRESSURE

TYPE	PRESSURE
24108	0.5 - 8.5 bar

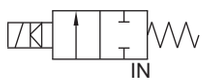

SM



FEATURES

- Larger exhaust area for reducing noise
- Solenoid capable of turning 360°
- Direct pipe mounted
- Easily removable

WETTED PARTS

Code	※	
Body and Internals	Aluminium Die Cast	
Guide Assembly	SS 304	
Shadow-Ring	Copper	
Plunger, Insert	SS 430	
Diaphragm	TPU	
Fasteners	SS 304	
Seat, Seals	TPU	

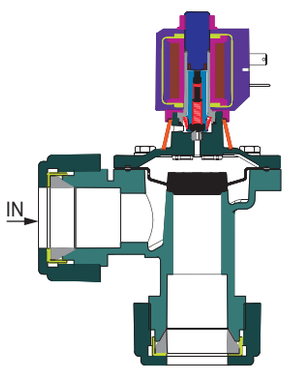

SPECIFICATION

FLOW FACTOR

RESPONSE TIME 30 ms
MINIMUM ELECTRICAL PULSE 30 ms

AMBIENT TEMPERATURE

-5 ºC to 85 ºC

FLUID TEMPERATURE

-5 ºC to 85 ºC

PORT CONNECTION

FUNCTION	INLET	OUTLET
NC	2	1

Contact Rotex for
- Any other ambient, fluid temperature, media and application

SPARES

(Refer page 25 for ordering code)

SPARE KIT	CODE
Diaphragm Kit : Diaphragm Kit	100
Seal Kit : Oring Set Diaphragm Kit, Plunger Assembly	98
Repair Kit : Oring Set, Diaphragm, Plunger Assembly, Fastener, Springs, Dresser Nut, Silencer, Guide Assembly	99
Solenoid Kit : Solenoid, Gasket	34

APPROVAL

(★ applied for)

Approval	TYPE 4X, 6P	IP67	Ex d IIC T4 or T5 or T6 IP66	Ex ia IIC T6 IP67	DGMS	CCOE
ISI		✓	✓		✓	✓
CE		✓	✓			
UL	✓		*			
CCOE			✓			
EAC			✓			
IECEx			✓			

CONTACT ROTEX BEFORE SELECTING THIS ITEM

Specifications are subject to change without notice

ROTEX
Engineering For The Future

25 NB DRESSER NUT PULSE JET SOLENOID VALVE

SPECIFICATION

PORT CONNECTION		PRE-SSURE bar		ORIFICE (mm)	FLOW FACTOR kv (LPM OF WATER @ 1 bar ΔP)	VALVE TYPE	PILOT PRESSURE	BODY MATERIAL AND INTERNALS				SEALS					MANUAL OVERRIDE			SOLENOID ENCLOSURE								POWER VA			CONSTRUCTION REFERENCE NUMBER
																				WEATHER PROOF				EXPLOSION PROOF							
SIZE	DRESSER NUT	MINIMUM	MAXIMUM					ALUMINIUM	ALUMINIUM + SS	BRASS (STD. PORT NPT)	SS 316/ CF8 (STD. PORT NPT)	NBR	Viton	EPDM	HYTREL	TPU	NIL	STAYPUT CUM MOMENTARY	MOMENTARY	FLYING LEAD	PLUG IN, IP67	SQ. PLUG IN, IP67	TERMINAL BOX IP67	EXPLOSION PROOF IIC, IP67	LARGE ENCLOSURE	SOLENOID SIZE			AC INRUSH	AC HOLDING	DC	
DRESSER NUT INTEGRAL PILOT																															
3/4"	6D	0.5	8.5	28	280	24108AD		※								S25				22		T	E		14			18	12	8	P11
1"	8D	0.5	8.5	28	310	24108AD		※								S25				22		T	E		14			18	12	8	P11

Cable Entry	T	E									
		Ex d					Ex emb				
M20 x 1.5	19	39	87MS				58MS	58LTMS			
M25 x 1.5			87				58	58LT			
1/2" NPT	16	37	87NS				58NS	58LTNS			

※ = Do not specify when opted for. Refer Page # 22 for Value of ※

ORDERING CODE, EXAMPLE

VALVE + SOLENOID

TYPE – ORIFICE – PORT CONNECTION – BODY AND INTERNALS – SEAL +
VOLTAGE – CURRENT – SOLENOID ENCLOSURE – POWER – INSULATION – APPROVAL
e.g. 24108-28-8G+I-230V-50Hz-39-H

DIMENSIONS

All Dimensions are in mm

CONSTRUCTION REFERENCE P11

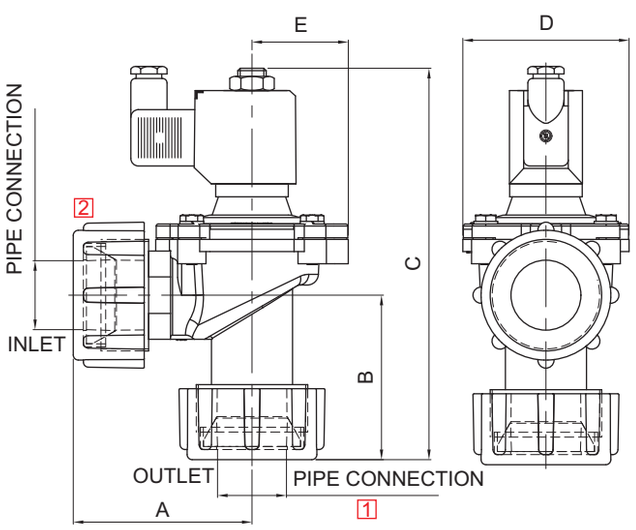

PLUG IN SOLENOID TYPE 22/ 25

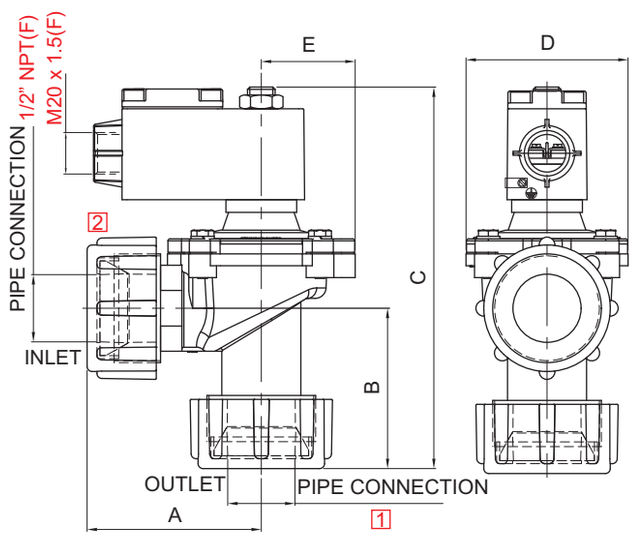

TERMINAL BOX/ Ex d/ LARGE ENCLOSURE, TYPE 16, 37, 39, 58, 58LT

VALVE TYPE	NW	PIPE CONN.	A	B	C	D	E
24108AD	28	3/4"	88	81	171	82	48
24108AD	28	1"	88	81	198	82	48

40 NB DRESSER NUT DOUBLE DIAPHRAGM PULSE JET SOLENOID VALVE

TYPE	PRESSURE

TYPE	PRESSURE

TYPE	PRESSURE
24106	0.5 - 8.5 bar

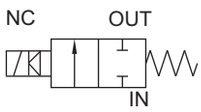

FEATURES

- Pulse jet valve with two diaphragm designed for large flow, fast ON and OFF response
- Larger exhaust area for reducing noise
- Solenoid capable of turning 360°
- Direct pipe mounted
- Easily removable

SM



WETTED PARTS

Code	※
Body and Internals	Aluminium Die Cast
Guide Assembly	SS 304
Shadow-Ring	Copper
Plunger, Insert	SS 430
Diaphragm	Hytrel, Viton
Fasteners	SS 304
Seat, Seals	NBR, Viton

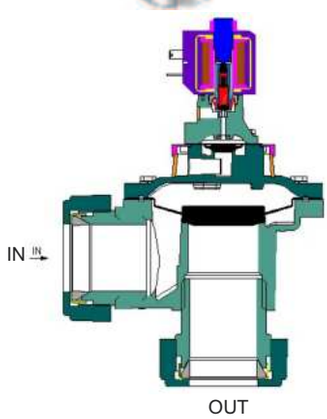

SPECIFICATION

FLOW FACTOR

RESPONSE TIME 25 ms
MINIMUM ELECTRICAL PULSE 40 ms

AMBIENT TEMPERATURE

-5 ºC to 85 ºC

FLUID TEMPERATURE

-5 ºC to 85 ºC

SPECIAL VERSION AND SUFFIX

Suffix : (Valve) AM
Special version : (Solenoid) CO, FR, SS

PORT CONNECTION

FUNCTION	INLET	OUTLET
NC	2	1

SPARES

(Refer page 25 for ordering code)

SPARE KIT	CODE
Diaphragm Kit : Diaphragm Kit	100
Seal Kit : Oring Set Diaphragm Kit, Plunger Assembly	98
Repair Kit : Oring Set, Diaphragm, Plunger Assembly, Fastener, Springs, Dresser Nut Silencer, Guide Assembly	99
Solenoid Kit : Solenoid, Gasket	34

APPROVAL

(* applied for)

Approval	TYPE 4X, 6P	IP67	Ex d IIC T4 or T5 or T6 IP66	Ex ia IIC T6 IP67	DGMS	CCOE
ISI		✓	✓		✓	✓
CE		✓	✓			
UL	✓		*			
CCPEL			✓			
EAC			✓			
IECEx			✓			

Contact Rotex for
- Any other ambient, fluid temperature, media and application

CONTACT ROTEX BEFORE SELECTING THIS ITEM

Specifications are subject to change without notice

ROTEX
Engineering For The Future

40 NB DRESSER NUT DOUBLE DIAPHRAGM PULSE JET SOLENOID VALVE

SPECIFICATION

PORT CONNECTION		PRE-SSURE bar		ORIFICE (mm)	FLOW FACTOR kv (LPM OF WATER @ 1 bar ΔP)	VALVE TYPE	PILOT PRESSURE	BODY MATERIAL AND INTERNALS				SEALS					MANUAL OVERRIDE			SOLENOID ENCLOSURE						SUFFIX		POWER VA			CONSTRUCTION REFERENCE NUMBER
																				WEATHER PROOF				EXPLOSION PROOF							
SIZE	DRESSER NUT	MINIMUM	MAXIMUM					ALUMINIUM	ALUMINIUM + SS	BRASS (STD. PORT NPT)	SS 316/ CF8 (STD. PORT NPT)	NBR	Viton	EPDM	HYTREL	PTFE	NIL	STAYPUT CUM MOMENTARY	MOMENTARY	FLYING LEAD	PLUG IN, IP67	SQ. PLUG IN, IP67	TERMINAL BOX IP67	EXPLOSION PROOF IIC, IP67	LARGE ENCLOSURE	SOLENOID SIZE	OXYGEN	AMONIA	AC INRUSH	AC HOLDING	DC	
DRESSER NUT INTEGRAL PILOT																															
11/2"	12D	0.5	8.5	52	1100	24106		※							※						22		T	E				14	18	12	8	P13

Cable Entry	T	E									
		Ex d					Ex emb				
M20 x 1.5	19	39	87	M	S		58	M	S	58LT	M S
M25 x 1.5			87				58			58LT	
1/2" NPT	16	37	87	N	S		58	N	S	58LT	N S

※ = Do not specify when opted for. Refer Page # 22 for Value of ※

ORDERING CODE, EXAMPLE

VALVE + SOLENOID

TYPE – PORT CONNECTION – BODY AND INTERNALS – SEAL +
VOLTAGE - CURRENT – SOLENOID ENCLOSURE – INSULATION – APPROVAL

e.g. 24106-52-12D+III-220V 50Hz-16-H

DIMENSIONS

All Dimensions are in mm

CONSTRUCTION REFERENCE P13

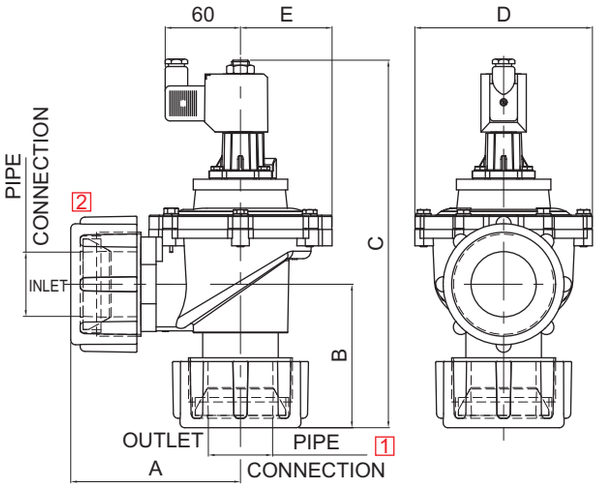

PLUG IN SOLENOID TYPE 22/ 25

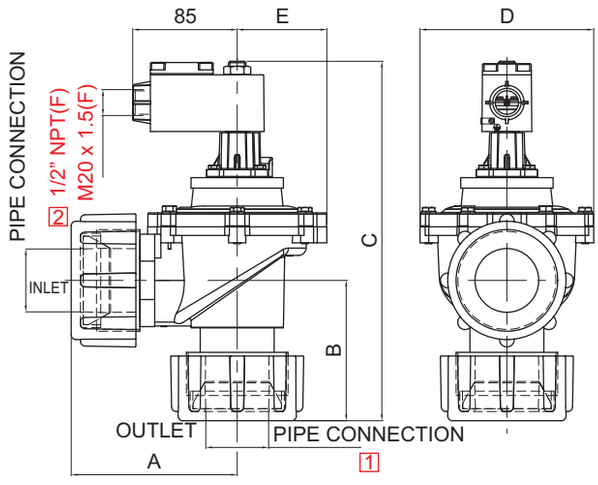

TERMINAL BOX/ Ex d/ LARGE ENCLOSURE, TYPE 16, 37, 39, 58, 58LT

VALVE TYPE	NW	PIPE CONN.	A	B	C	D	E
24106	52	1-1/2"	117	95	278	141	73

11

3

Specifications are subject to change without notice

TANK MOUNTED PULSE JET SOLENOID VALVE

TYPE	PRESSURE

TYPE	PRESSURE
24114BET	0.5 - 8.5 bar

TYPE	PRESSURE
24114	0.5 - 8.5 bar
24114B	0.5 - 8.5 bar
24114ET	0.5 - 8.5 bar

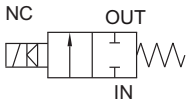

FEATURES

- Pulse jet valve with two diaphragm designed for large flow, fast ON and OFF response
- Larger exhaust area for reducing noise
- Solenoid capable of turning 360º
- Tank mounted





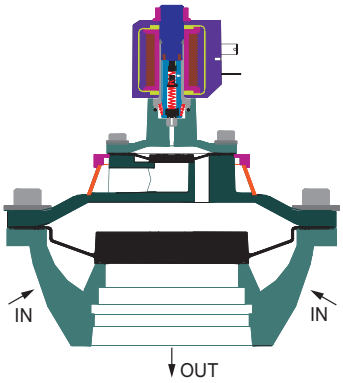

WETTED PARTS

Code	※
Body and Internals	Aluminium Die Cast
Guide Assembly	SS 304
Shadow-Ring	Copper
Plunger, Insert	SS 430
Diaphragm	Hytrel, Viton, NBR
Fasteners	SS 304
Seat, Seals	NBR, Viton, PTFE

SPECIFICATION

RESPONSE TIME 30 ms
MINIMUM ELECTRICAL PULSE 50 ms

AMBIENT TEMPERATURE

-5 ºC to 85 ºC

FLUID TEMPERATURE

5 ºC to 85 ºC

SPECIAL VERSION AND SUFFIX

Suffix : (Valve) AM
Special version : (Solenoid) CO, FR, SS

PORT CONNECTION

FUNCTION	INLET	OUTLET
NC	2	1

Contact Rotex for
- Any other ambient, fluid temperature, media and application

SPARES

(Refer page 25 for ordering code)

SPARE KIT	CODE
Diaphragm Kit : Diaphragm Kit	100
Seal Kit : Oring Set, Diaphragm Kit Plunger Assembly	98
Repair Kit : Oring Set, Diaphragm Kit Plunger Assembly, Fastener, Springs	99
Solenoid Kit : Solenoid, Gasket	34

APPROVAL

(* applied for)

Approval	TYPE 4X, 6P	IP67	Ex d IIC T4 or T5 or T6 IP66	Ex ia IIC T6 IP67	DGMS	CCOE
		✓	✓		✓	✓
CE		✓	✓			
UL	✓		*			
CEPEL			✓			
PG			✓			
IECEx			✓			

ROTEX
Engineering For The Future

TANK MOUNTED PULSE JET SOLENOID VALVE

SPECIFICATION

PORT CONNECTION		PRE-SSURE bar		ORIFICE (mm)	FLOW FACTOR kv (LPM OF WATER @ 1 bar ΔP)	VALVE TYPE	PILOT PRESSURE	BODY MATERIAL AND INTERNALS				SEALS					MANUAL OVERRIDE			SOLENOID ENCLOSURE							SUFFIX		POWER VA			CONSTRUCTION REFERENCE NUMBER
																				WEATHER PROOF				EXPLOSION PROOF								
SIZE	SUBBASE	MINIMUM	MAXIMUM					ALUMINIUM	ALUMINIUM + SS	BRASS (STD. PORT NPT)	SS 316/ CF8 (STD. PORT NPT)	NBR	Viton	EPDM	HYTREL	PTFE	NIL	STAYPUT CUM MOMENTARY	MOMENTARY	FLYING LEAD	PLUG IN, IP67	SQ. PLUG IN, IP67	TERMINAL BOX IP67	EXPLOSION PROOF IIC,IP67	LARGE ENCLOSURE	SOLENOID SIZE	OXYGEN	AMONIA	AC INRUSH	AC HOLDING	DC	
INTEGRAL PILOT																															
11/2"	12SB	0.5	8.5	52	1100	24114		※				S0	S2		※					22		T	E		14			18	12	8	P15
11/2"	12SB	0.5	8.5	52	1100	24114B		※				S0	S2		※					22		T	E		14			18	12	8	P15
2"	16SB	0.5	8.5	52	1300	24114		※				S0	S2		※					22		T	E		14			18	12	8	P15
2"	16SB	0.5	8.5	52	1300	24114B		※				S0	S2		※					22		T	E		14			18	12	8	P15
21/2"	20SB	0.5	8.5	65	2000	24114		※				S0	S2		※					22		T	E		14			18	12	8	P15
21/2"	20SB	0.5	8.5	65	2000	24114B		※				S0	S2		※					22		T	E		14			18	12	8	P15
3"	24SB	0.5	8.5	80	3000	24114		※				S0	S2		※					22		T	E		14			18	12	8	P15
3"	24SB	0.5	8.5	80	3000	24114B		※				S0	S2		※					22		T	E		14			18	12	8	P15

Cable Entry	T	E					
		Ex d				Ex emb	
M20 x 1.5	19	39	87M	S		58M	S58LTMS
M25 x 1.5			87			58	58LT
1/2" NPT	16	37	87N	S		58N	S58LTNS

※ = Do not specify when opted for. Refer Page # 22 for Value of ※

ORDERING CODE, EXAMPLE

VALVE + SOLENOID

TYPE – PORT CONNECTION – BODY AND INTERNALS – SEAL +
VOLTAGE - CURRENT – SOLENOID ENCLOSURE – INSULATION – APPROVAL

e.g. 24114-80-SB+I-220V-50Hz-16-H

DIMENSIONS

All Dimensions are in mm

CONSTRUCTION REFERENCE P15

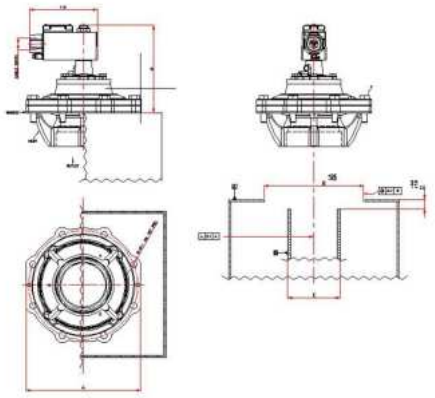

TERMINAL BOX/ Ex d/ LARGE ENCLOSURE, TYPE 16, 19, 37, 39, 58, 58LT

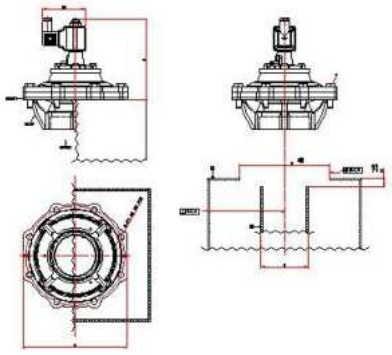

PLUG IN SOLENOID TYPE 22/ 25

VALVE TYPE	NW	K (PORT SIZE)	A	B	C	D	E	F
24114	52	12SB	146	112	149	48	14	6-M6x30
24114ET	52	12SB	146	112	149	48	14	6-M6x30
24114	52	16SB	149	112	149	60	13	6-M6x30
24114ET	52	16SB	149	112	149	60	13	6-M6x30
24114	65	20SB	168	136	152	73	15	6-M8x25
24114ET	65	20SB	168	136	152	73	15	6-M8x25
24114	80	24SB	197	171	151	89	17	8-M10x45
24114ET	80	24SB	197	171	151	89	17	8-M10x45

Specifications are subject to change without notice

ROTEX
Engineering For The Future

TANK MOUNTED PULSE JET SOLENOID VALVE

SPECIFICATION

PORT CONNECTION		PRE-SSURE bar		ORIFICE (mm)	FLOW FACTOR kv (LPM OF WATER @ 1 bar ΔP)	VALVE TYPE	PILOT PRESSURE	BODY MATERIAL AND INTERNALS				SEALS					MANUAL OVERRIDE			SOLENOID ENCLOSURE							SUFFIX		POWER VA			CONSTRUCTION REFERENCE NUMBER
																				WEATHER PROOF				EXPLOSION PROOF								
SIZE	SUBBASE	MINIMUM	MAXIMUM					ALUMINIUM	ALUMINIUM + SS	BRASS (STD. PORT NPT)	SS 316/ (STD. PORT NPT)	NBR	Viton+PTFE	EPDM	HYTREL	PTFE	NIL	STAYPUT CUM MOMENTARY	MOMENTARY	FLYING LEAD	PLUG IN, IP67	SQ. PLUG IN, IP67	TERMINAL BOX IP67	EXPLOSION PROOF IIC,IP67	LARGE ENCLOSURE	SOLENOID SIZE	OXYGEN	AMONIA	AC INRUSH	AC HOLDING	DC	
													INTEGRAL PILOT																		
11/2"	12SB	0.5	8.5	52	1100	24114ET	※						S			8					22		T	E		14			18	12	8	P15
11/2"	12SB	0.5	8.5	52	1100	24114BET	※						S			8					22		T	E		14			18	12	8	P15
2"	16SB	0.5	8.5	52	1300	24114ET	※						S			8					22		T	E		14			18	12	8	P15
2"	16SB	0.5	8.5	52	1300	24114BET	※						S			8					22		T	E		14			18	12	8	P15
21/2"	20SB	0.5	8.5	65	2000	24114ET	※						S			8					22		T	E		14			18	12	8	P15
21/2"	20SB	0.5	8.5	65	2000	24114BET	※						S			8					22		T	E		14			18	12	8	P15
3"	24SB	0.5	8.5	80	3000	24114ET	※						S			8					22		T	E		14			18	12	8	P15
3"	24SB	0.5	8.5	80	3000	24114BET	※						S			8					22		T	E		14			18	12	8	P15

Cable Entry	T	E					
		Ex d				Ex emb	
M20 x 1.5	19	39	87MS			58MS	58LTMS
M25 x 1.5			87			58	58LT
1/2" NPT	16	37	87NS			58NS	58LTNS

※ = Do not specify when opted for. Refer Page # 22 for Value of ※

ORDERING CODE, EXAMPLE

VALVE + SOLENOID

TYPE – PORT CONNECTION – BODY AND INTERNALS – SEAL +
VOLTAGE - CURRENT – SOLENOIDENCLOSURE – POWER – INSULATION - APPROVAL

e.g. 24114ET-80-SB-S8+I-220V-50Hz-16-H

DIMENSIONS

All Dimensions are in mm

CONSTRUCTION REFERENCE P15

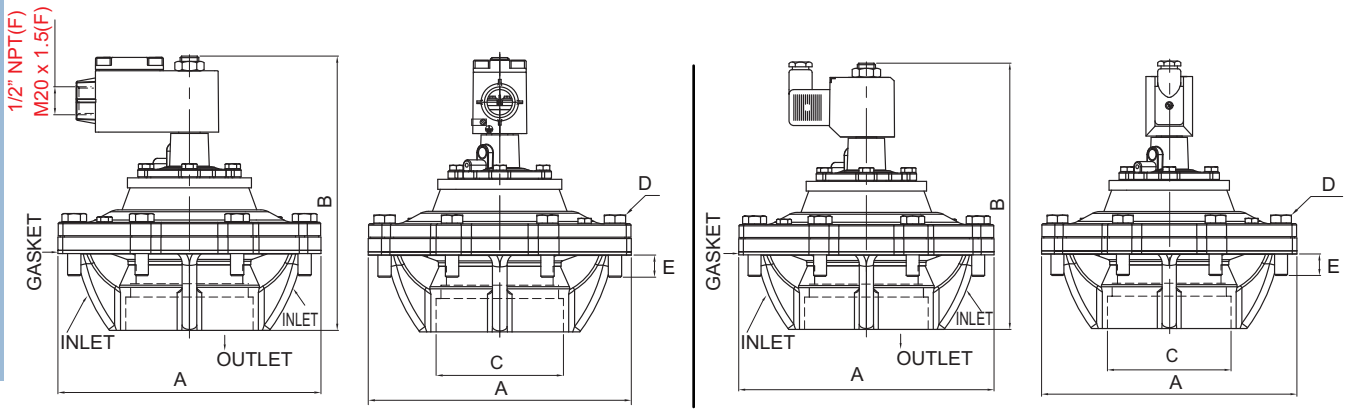

TERMINAL BOX/ Ex d/ LARGE ENCLOSURE, TYPE 16, 19, 37, 39, 58, 58LT

PLUG IN SOLENOID TYPE 22/ 25

VALVE TYPE	NW	A	B	C	D	E
24114ET	80	197	151	3" PIPE	M10x45	17
24114BET	80	197	151	3" PIPE	M10x25	11
24114ET	65	168	152	2 1/2" PIPE	M8x25	05
24114BET	65	168	152	2 1/2" PIPE	M8x18	11
24114ET	52	146	149	2" PIPE	M6x30	08
24114BET	52	146	149	2" PIPE	M8x16	12
24114ET	52	146	149	1 1/2" PIPE	M6x30	08
24114BET	52	146	149	1 1/2" PIPE	M8x16	12

Specifications are subject to change without notice

25 NB REMOTE PILOT PULSE JET VALVE

TYPE	PRESSURE

TYPE	PRESSURE

TYPE	PRESSURE
26108	0.5 - 8.5 bar

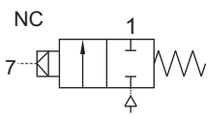

FEATURES

- Remote operation where electric supply not permitted
- Select valve type 20159 to operate the valve Refer page 369 to 372



WETTED PARTS

Code	※	B5
Body and Internals	Aluminium Die Cast	SS 316 Cast
Diaphragm	TPU, Viton	
Fasteners	SS 304	
Seat, Seals	NBR, Viton	

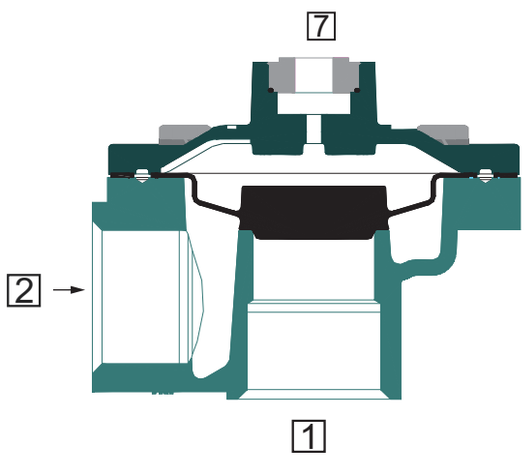

SPECIFICATION

FLOW FACTOR		
SIZE	3/4"	1"
(kv) lpm	280	310

RESPONSE TIME DEPENDS ON PILOT VALVE ORIFICE AND PIPE LENGTH BETWEEN PILOT AND VALVE

AMBIENT TEMPERATURE

-5 ºC to 85 ºC

FLUID TEMPERATURE

-5 ºC to 85 ºC

PORT CONNECTION

INLET	OUTLET	PILOT
2	1	7

SPARES

(Refer page 25 for ordering code)

SPARE KIT	CODE
Diaphragm Kit : Diaphragm Kit	100
Seal Kit : Oring Set Diaphragm Kit	98
Repair Kit : Oring Set, Diaphragm Kit, Fastener	99

Contact Rotex for
- Any other ambient, fluid temperature, media and application

⚠ Use 2/2 NC PILOT Type 20159, 3.5 mm orifice for operating this valve.

ROTEX
Engineering For The Future

25 NB REMOTE PILOT PULSE JET VALVE

SPECIFICATION

PORT CONNECTION			PRE-SSURE bar		ORIFICE (mm)	FLOW FACTOR kv (LPM OF WATER @ 1 bar ΔP)	VALVE TYPE	PILOT PRESSURE	BODY MATERIAL AND INTERNALS				DIAPHRAGM					MANUAL OVERRIDE			SOLENOID ENCLOSURE						SUFFIX		POWER VA			CONSTRUCTION REFERENCE NUMBER
																					WEATHER PROOF				EXPLOSION PROOF									
SIZE	BSP(F)	NPT(F)	MINIMUM	MAXIMUM					ALUMINIUM	ALUMINIUM + SS	BRASS (STD. PORT NPT)	SS 316/ CF8 (STD. PORT NPT)	NBR	Viton	EPDM	HYTREL	TPU	NIL	STAYPUT CUM MOMENTARY	MOMENTARY	FLYING LEAD	PLUG IN, IP67	SQ. PLUG IN, IP67	TERMINAL BOX IP67	FPJB Ex d IIC, T4 OR T6, IP67	LARGE ENCLOSURE	SOLENOID SIZE	OXYGEN	AMONIA	AC INRUSH	AC HOLDING	DC	
REMOTE PILOT																																
3/4"	6G	6R	0.5	8.5	28	280	26108		※			B12		S2			S25															P17
1"	8G	8R	0.5	8.5	28	310	26108		※			B12		S2			S25															P17

※ = Do not specify when opted for. Refer Page # 22 for Value of ※
✓= Options available

ORDERING CODE, EXAMPLE

VALVE

TYPE – ORIFICE – PORT CONNECTION – BODY AND INTERNALS – SEAL

e.g. 26108-28-6G-S25

DIMENSIONS

All Dimensions are in mm

CONSTRUCTION REFERENCE P17

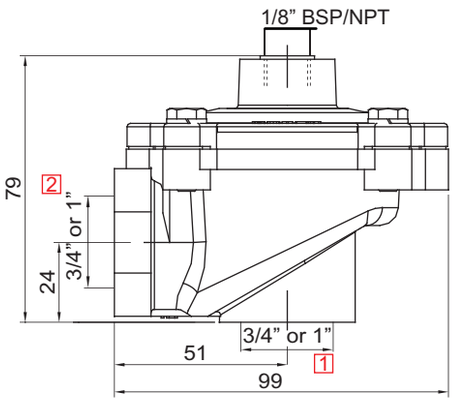

11

Specifications are subject to change without notice

4

40/ 50 NB REMOTE PILOT DOUBLE DIAPHRAGM PULSE JET VALVE

TYPE	PRESSURE

TYPE	PRESSURE

TYPE	PRESSURE
26106	0.5 - 8.5 bar

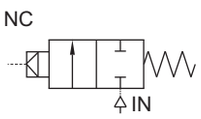

FEATURES

- Pulse jet valve with double Diaphragm for remote operation with fast ON and OFF response
- Select valve type 20159 to operate the valve Refer page 369 to 372



WETTED PARTS

Code	※	B5
Body and Internals	Aluminium Die Cast	SS 316 Cast
Diaphragm	Hytrel, Viton	
Fasteners	SS 304	
Seat, Seals	NBR, Viton	

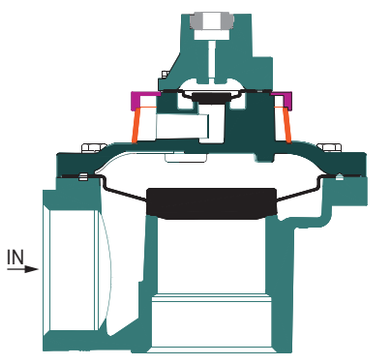

SPECIFICATION

FLOW FACTOR

RESPONSE TIME DEPENDS ON PILOT VALVE ORIFICE AND PIPE LENGTH BETWEEN PILOT AND VALVE

SPARES

(Refer page 25 for ordering code)

SPARE KIT	CODE
Diaphragm Kit : Diaphragm Kit	100
Seal Kit : Oring Set, Diaphragm Kit	98
Repair Kit : Oring Set, Diaphragm Kit, Fastener	99

AMBIENT TEMPERATURE

-5 ºC to 85 ºC

FLUID TEMPERATURE

-5 ºC to 85 ºC

PORT CONNECTION

INLET	OUTLET	PILOT
2	1	3

Contact Rotex for
- Any other ambient, fluid temperature, media and application

⚠ Use 2/2 NC PILOT Type 20159, 3.5 mm orifice for operating this valve.

ROTEX
Engineering For The Future

40/ 50 NB REMOTE PILOT DOUBLE DIAPHRAGM PULSE JET VALVE

SPECIFICATION

PORT CONNECTION			PRE-SSURE bar		ORIFICE (mm)	FLOW FACTOR kv (LPM OF WATER @ 1 bar ΔP)	VALVE TYPE	PILOT PRESSURE	BODY MATERIAL AND INTERNALS				SEALS					MANUAL OVERRIDE			SOLENOID ENCLOSURE							SUFFIX		POWER VA			CONSTRUCTION REFERENCE NUMBER
																					WEATHER PROOF				EXPLOSION PROOF									
SIZE	BSP(F)	NPT(F)	MINIMUM	MAXIMUM					ALUMINIUM	ALUMINIUM + SS	BRASS (STD. PORT NPT)	SS 316/ CF8 (STD. PORT NPT)	NBR	Viton	EPDM	HYTREL	PTFE	NIL	STAYPUT CUM MOMENTARY	MOMENTARY	FLYING LEAD	PLUG IN, IP67	SQ. PLUG IN, IP67	TERMINAL BOX IP67	FPJB Ex d IIC, T4 OR T6, IP67	LARGE ENCLOSURE	SOLENOID SIZE	OXYGEN	AMONIA	AC INRUSH	AC HOLDING	DC	
REMOTE PILOT																																	
11/2"	12G	12R	0.5	8.5	52	1100	26106	※				S0	S2	※																			P19
			0.5	8.5	52	1100	26106A	※			B12	S0	S2	※																			P19
2"	16G	16R	0.5	8.5	52	1300	26106	※			B12	S0	S2	※																			P19
			0.5	8.5	65	1800	26106	※				S0	S2	※																			P19
21/2"	20G	20R	0.5	8.5	65	2000	26106	※				S0	S2	※																			P19

ORDERING CODE, EXAMPLE

VALVE

※ = Do not specify when opted for. Refer Page # 22 for Value of ※

TYPE – ORIFICE – PORT CONNECTION – BODY AND INTERNALS – SEAL

e.g. 26106-52-16G.

DIMENSIONS

All Dimensions are in mm

CONSTRUCTION REFERENCE P19

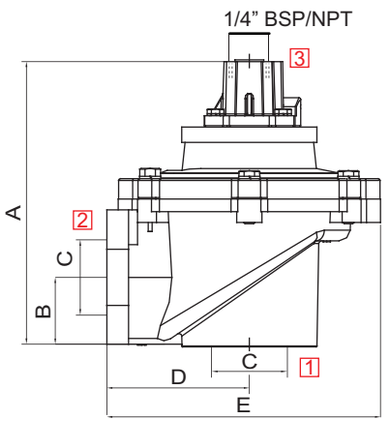

VALVE TYPE	NW	PIPE CONN.	A	B	C	D	E
24106	52	11/2"	138	38.5	11/2"	79	151.5
24106	52	2"	138	38.5	2"	79	151.5
24106A	52	11/2"	153	32.5	11/2"	72	144.5
24106	65	2"	159	45	2"	96	180
24106	65	21/2"	159	45	21/2"	96	180

25 NB REMOTE PILOT DRESSER NUT PULSE JET VALVE

TYPE	PRESSURE

TYPE	PRESSURE

TYPE	PRESSURE
26108D	0.5 - 8.5 bar

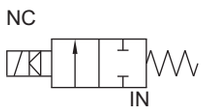

FEATURES

- Direct pipe mounted
- Select valve type 20159 to operate the valve Refer to page 369 to 372
- Easily removable

SM



WETTED PARTS

Code	※
Body and Internals	Aluminium Die Cast
Diaphragm	TPU, Viton
Fasteners	SS 304
Seat, Seals	NBR, Viton

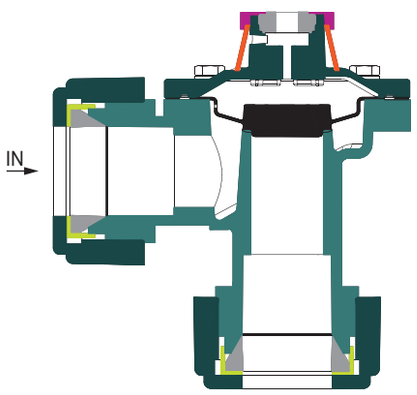

SPECIFICATION

FLOW FACTOR

RESPONSE TIME DEPENDS ON PILOT VALVE ORIFICE AND PIPE LENGTH BETWEEN PILOT AND VALVE

AMBIENT TEMPERATURE

-5 ºC to 85 ºC

FLUID TEMPERATURE

-5 ºC to 85 ºC

SPARES

(Refer page 25 for ordering code)

SPARE KIT	CODE
Diaphragm Kit : Diaphragm Kit	100
Seal Kit : Oring Set, Diaphragm Kit	98
Repair Kit : Oring Set, Diaphragm Kit Fastener	99

PORT CONNECTION

INLET	OUTLET	PILOT
2	1	3

Contact Rotex for
- Any other ambient, fluid temperature, media and application

⚠ Use 2/2 NC PILOT Valve Type 20159, 3.5 mm orifice for operating this valve.

CONTACT ROTEX BEFORE SELECTING THIS ITEM

Specifications are subject to change without notice

ROTEX
Engineering For The Future

25 NB REMOTE PILOT DRESSER NUT PULSE JET VALVE

SPECIFICATION

PORT CONNECTION		PRE-SSURE bar		ORIFICE (mm)	FLOW FACTOR kv (LPM OF WATER @ 1 bar ΔP)	VALVE TYPE	PILOT PRESSURE	BODY MATERIAL AND INTERNALS				DIAPHRAGM				MANUAL OVERRIDE			SOLENOID ENCLOSURE							SUFFIX		POWER VA			CONSTRUCTION REFERENCE NUMBER
																			WEATHER PROOF				EXPLOSION PROOF								
SIZE	DRESSER NUT	MINIMUM	MAXIMUM					ALUMINIUM	ALUMINIUM + SS	BRASS	SS 316/ CF8	NBR	Viton	EPDM	HYTREL	TPU	NIL	STAYPUT CUM MOMENTARY	MOMENTARY	FLYING LEAD	PLUG IN, IP67	SQ. PLUG IN, IP67	TERMINAL BOX IP67	FPJB Ex d IIC, T4 OR T6, IP67	LARGE ENCLOSURE	SOLENOID SIZE	OXYGEN	AMONIA	AC INRUSH	AC HOLDING	DC	
REMOTE PILOT																															
3/4”	6D	0.5	8.5	28	280	26108D		※					S2			S25															P21
1”	8D	0.5	8.5	28	310	26108D		※					S2			S25															P22

※ = Do not specify when opted for. Refer Page # 22 for Value of※
✓= Options available

ORDERING CODE, EXAMPLE

VALVE

TYPE – ORIFICE – PORT CONNECTION – BODY AND INTERNALS – SEAL
e.g. 26108D-28-8D-S25

DIMENSIONS

All Dimensions are in mm

CONSTRUCTION REFERENCE P21

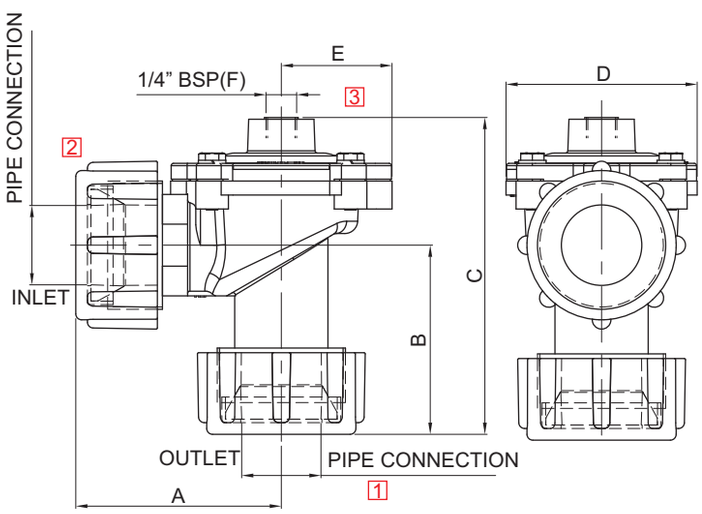

VALVE TYPE	NW	PIPE CONN	A	B	C	D	E	Con. Reg
26108D	28	3/4”	88	81	136	82	48	21
26108D	28	1”	88	81	136	82	48	22

Specifications are subject to change without notice

40 NB REMOTE PILOT DOUBLE DIAPHRAGM DRESSER NUT PORT PULSE JET VALVE

TYPE	PRESSURE

TYPE	PRESSURE

TYPE	PRESSURE
26106D	0.5 - 8.5 bar

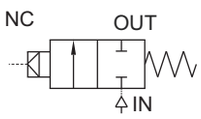

FEATURES

- Pulse jet valve with double Diaphragm for remote operation with fast ON and OFF response
- Select valve type 20159 to operate the valve. Refer page 369 to 372
- Direct pipe mounted
- Easily removable

SM



WETTED PARTS

Code	※	B5
Body and Internals	Aluminium Die Cast	SS 316 Cast
Diaphragm	Hytrel, Viton	
Fasteners	SS 304	
Seat, Seals	NBR, Viton	

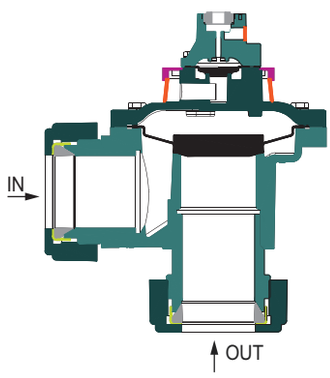

SPECIFICATION

FLOW FACTOR

RESPONSE TIME DEPENDS ON PILOT VALVE ORIFICE AND PIPE LENGTH BETWEEN PILOT AND VALVE

AMBIENT TEMPERATURE

-5 ºC to 85 ºC

FLUID TEMPERATURE

-5 ºC to 85 ºC

PORT CONNECTION

INLET	OUTLET	PILOT
2	1	3

SPARES

(Refer page 25 for ordering code)

SPARE KIT	CODE
Diaphragm Kit : Diaphragm Kit	100
Seal Kit : Oring Set, Diaphragm Kit	98
Repair Kit : Oring Set, Diaphragm Kit, Fastener	99

Contact Rotex for
- Any other ambient, fluid temperature, media and application

Use 2/2 NC PILOT Type 20159, 3.5mm orifice for operating this valve.

CONTACT ROTEX BEFORE SELECTING THIS ITEM

ROTEX
Engineering For The Future

40 NB REMOTE PILOT DOUBLE DIAPHRAGM DRESSER NUT PORT PULSE JET VALVE

SPECIFICATION

PORT CONNECTION		PRE-SSURE bar		ORIFICE (mm)	FLOW FACTOR kv (LPM OF WATER @ 1 bar ΔP)	VALVE TYPE	PILOT PRESSURE	BODY MATERIAL AND INTERNALS				SEALS					MANUAL OVERRIDE			SOLENOID ENCLOSURE						SUFFIX		POWER VA			CONSTRUCTION REFERENCE NUMBER
																				WEATHER PROOF				EXPLOSION PROOF							
SIZE	DRESSER NUT	MINIMUM	MAXIMUM					ALUMINIUM	ALUMINIUM + SS	BRASS	SS 316/ CF8	NBR	Viton	EPDM	HYTREL	PTFE	NIL	STAYPUT CUM MOMENTARY	MOMENTARY	FLYING LEAD	PLUG IN, IP67	SQ. PLUG IN, IP67	TERMINAL BOX IP67	FPJB Ex d IIC, T4 OR T6, IP67	LARGE ENCLOSURE	SOLENOID SIZE	OXYGEN	AMONIA	AC INRUSH	AC HOLDING	DC	
							REMOTE PILOT																								
11/2"	12D	0.5	8.5	52	1100	26106D		※							※																P23

※ = Do not specify when opted for. Refer Page # 22 for Value of ※
✓= Options available

ORDERING CODE, EXAMPLE

VALVE

TYPE – ORIFICE – PORT CONNECTION – BODY AND INTERNALS – SEAL

e.g. 26106-52-12D

DIMENSIONS

All Dimensions are in mm

CONSTRUCTION REFERENCE P23

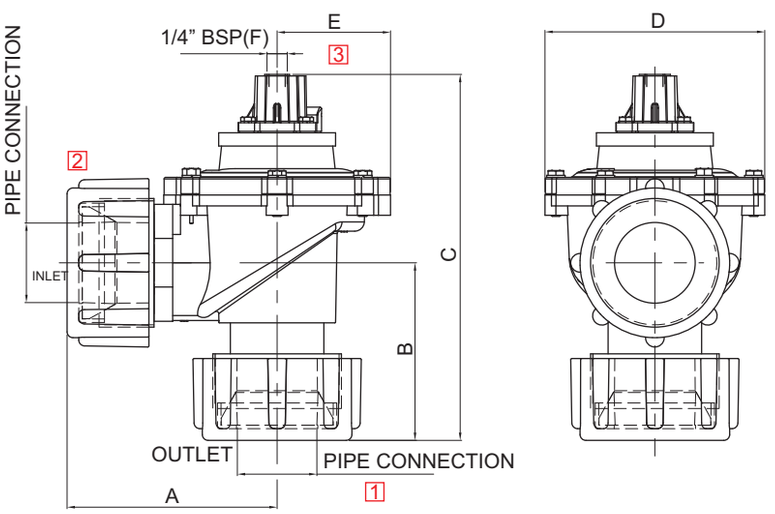

VALVE TYPE	NW	PIPE CONN.	A	B	C	D	E
26106D	52	1-1/2"	117	95	215	141	73

11

Specifications are subject to change without notice

3

80 NB REMOTE PILOT TANK MOUNTED DOUBLE DIAPHRAGM PULSE JET VALVE

TYPE	PRESSURE

TYPE	PRESSURE

TYPE	PRESSURE
26114	0.5 - 8.5 bar

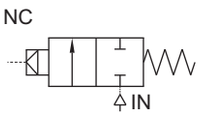

FEATURES

- Pulse jet valve with double Diaphragm for remote operation with fast ON and OFF response
- Select valve type 20159 to operate the valve Refer to page 369 to 372
- Tank mounted



WETTED PARTS

Code	※	
Body and Internals	Aluminium Die Cast	
Diaphragm	Hytrel, Viton	
Fasteners	SS 304	
Seat, Seals	NBR, Viton	

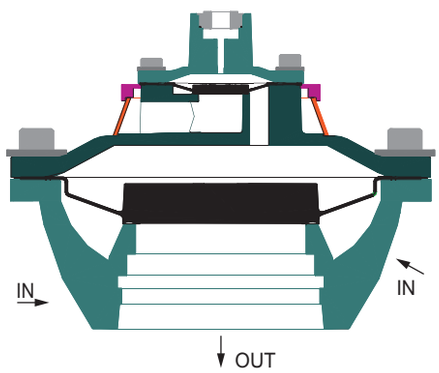

SPECIFICATION

FLOW FACTOR

RESPONSE TIME DEPENDS ON PILOT VALVE ORIFICE AND PIPE LENGTH BETWEEN PILOT AND VALVE

AMBIENT TEMPERATURE

-5 ºC to 85 ºC

FLUID TEMPERATURE

-5 ºC to 85 ºC

PORT CONNECTION

INLET	OUTLET	PILOT
2	1	3

Contact Rotex for
- Any other ambient, fluid temperature, media and application

SPARES (Refer page 25 for ordering code)

SPARE KIT	CODE
Seal Kit : Oring Set, Diaphragm Kit	98
Repair Kit : Oring Set, Fastener, Diaphragm Kit	99

Use 2/2 NC PILOT Type 20159, 3.5mm orifice for operating this valve.

ROTEX
Engineering For The Future

80 NB REMOTE PILOT TANK MOUNTED DOUBLE DIAPHRAGM PULSE JET VALVE

SPECIFICATION

PORT CONNECTION		PRE-SSURE bar		ORIFICE (mm)	FLOW FACTOR kv (LPM OF WATER @ 1 bar ΔP)	VALVE TYPE	PILOT PRESSURE	BODY MATERIAL AND INTERNALS				SEALS					MANUAL OVERRIDE			SOLENOID ENCLOSURE						SUFFIX		POWER VA			CONSTRUCTION REFERENCE NUMBER
																				WEATHER PROOF				EXPLOSION PROOF								
SIZE	SUBBASE	MINIMUM	MAXIMUM					ALUMINIUM	ALUMINIUM + SS	BRASS	SS 316/ CF8	NBR	Viton	EPDM	HYTREL	PTFE	NIL	STAYPUT CUM MOMENTARY	MOMENTARY	FLYING LEAD	PLUG IN, IP67	SQ. PLUG IN, IP67	TERMINAL BOX IP67	FPJB Ex d IIC, T4 OR T6, IP67	LARGE ENCLOSURE	SOLENOID SIZE	OXYGEN	AMONIA	AC INRUSH	AC HOLDING	DC	
REMOTE PILOT																															
3”	24SB	0.5	8.5	80	3000	26114		※							※																P24

※ = Do not specify when opted for. Refer Page # 22 for Value of ※
✓= Options available

ORDERING CODE, EXAMPLE

VALVE

TYPE – ORIFICE – PORT CONNECTION – BODY AND INTERNALS – SEAL

e.g. 26114-80-24SB

DIMENSIONS

All Dimensions are in mm

CONSTRUCTION REFERENCE P24

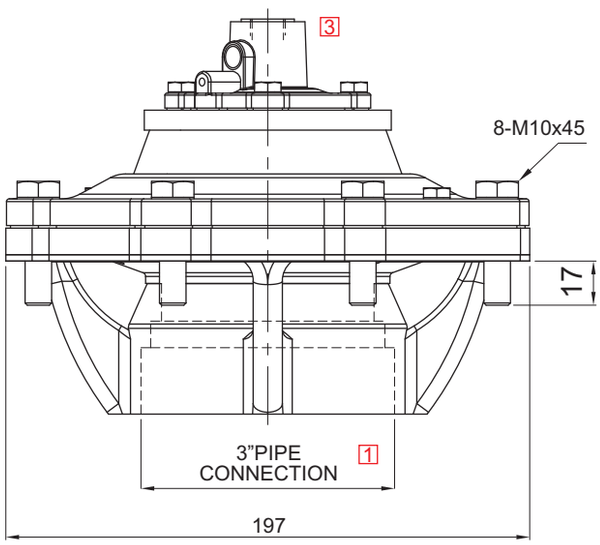

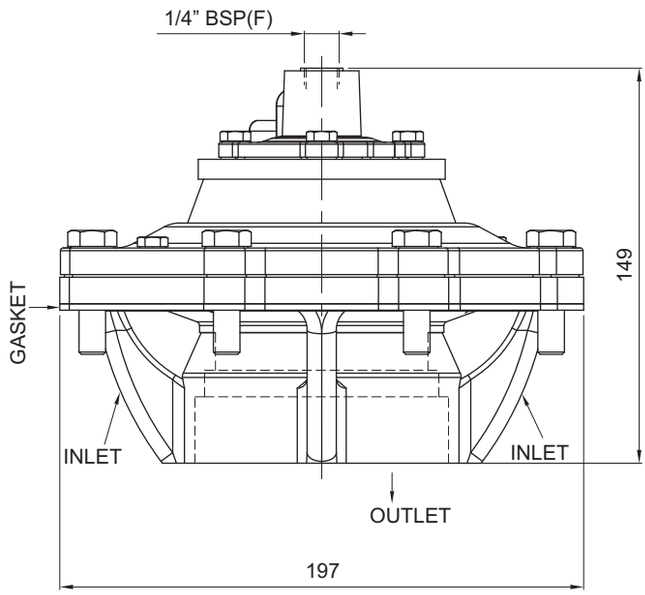

11

Specifications are subject to change without notice

3

PILOT VALVE

TYPE	PRESSURE

TYPE	PRESSURE

TYPE	PRESSURE
20159	0 - 8.5 bar

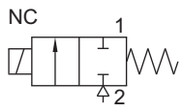

FEATURES

- Line mounted valve
- Ease of maintenance
- High Flow, quick response
- Solenoid capable of turning 360°



WETTED PARTS

Code	※	B5
Body and Internals	Aluminium Die Cast	SS 316 Cast
Guide Assembly	SS 304	
Shadow-Ring	Copper	
Plunger, Insert	SS 430	
Diaphragm	Hytrel, Viton	
Fasteners	SS 304	
Seat, Seals	NBR, Viton	

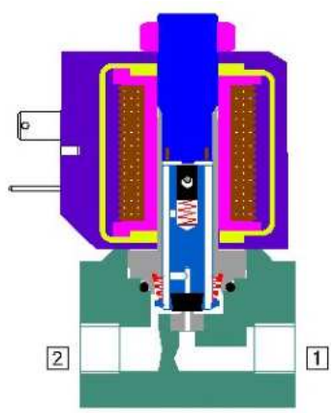

SPECIFICATION

RESPONSE TIME 8 ms

AMBIENT TEMPERATURE

-30 ºC to 75 ºC

FLUID TEMPERATURE

-30 ºC to 75 ºC

PORT CONNECTION

FUNCTION	INLET	OUTLET
NC	2	1

SPARES

(Refer page 25 for ordering code)

SPARE KIT	CODE
Seal Kit : Oring Set and Plunger Assembly	98
Repair Kit : Oring Set, Plunger Assembly, Fastener, Springs, Guide Assembly	99
Solenoid Kit : Solenoid, Gasket	34

APPROVAL

(* applied for)

Approval	TYPE 4X, 6P	IP67	Ex d IIC T4 or T5 or T6 IP66	Ex ia IIC T6 IP67	DGMS	CCOE
		✓	✓	✓	✓	✓
CE		✓	✓	✓		
UL	✓		*			
CEPEL			✓	✓		
EAC			✓	✓		
IECEx			✓	✓		

Contact Rotex for
- Any other ambient, fluid temperature, media and application

ROTEX
Engineering For The Future

PILOT VALVE

SPECIFICATION

PORT CONNECTION			PRE-SSURE bar		ORIFICE (mm)	FLOW FACTOR kv (LPM OF WATER @ 1 bar ΔP)	VALVE TYPE	PILOT PRESSURE	BODY MATERIAL AND INTERNALS				SEALS					MANUAL OVERRIDE			SOLENOID ENCLOSURE						SUFFIX		POWER VA			CONSTRUCTION REFERENCE NUMBER
																					WEATHER PROOF				EXPLOSION PROOF								
SIZE	BSP(F)	NPT(F)	MINIMUM	MAXIMUM					ALUMINIUM	ALUMINIUM + SS	BRASS (STD. PORT NPT)	SS 316 (STD. PORT NPT)	NBR	Viton	EPDM	HYTREL	PTFE	NIL	STAYPUT CUM MOMENTARY	MOMENTARY	FLYING LEAD	PLUG IN, IP67	SQ. PLUG IN, IP67	TERMINAL BOX IP67	EXPLOSION PROOF IIC, IP67	LARGE ENCLOSURE	SOLENOID SIZE	OXYGEN	AMONIA	AC INRUSH	AC HOLDING	DC	
REMOTE PILOT																																
1/8"	1G	1R	0	8.5	3.5	5	20159		※				※	S2									25	T	E		14			15	15	15	P26
1/4"	2G	2R	0	8.5	5	8	20159		※				※	S2									25	T	E		14			15	15	15	P26

Cable Entry	T	E	
		Ex d	Ex emb
M20 x 1.5	19	39 87MS	58MS 58LTMS
M25 x 1.5		87	58 58LT
1/2" NPT	16	37 87NS	58NS 58LTNS

	F
Flying lead IP54	※
Flying lead IP67	01

※ = Do not specify when opted for. Refer Page # 22 for Value of ※
✓= Options available

ORDERING CODE, EXAMPLE

VALVE + SOLENOID

TYPE – SUFFIX – ORIFICE – PORT CONNECTION – BODY AND INTERNALS – SEAL +
SIZE – VOLTAGE – CURRENT – SOLENOID ENCLOSURE – SPECIAL VERSION – POWER – INSULATION – APPROVAL
e.g. 20159-3.5-1G+III-24V-DC-16-LW15-H

DIMENSIONS

All Dimensions are in mm

CONSTRUCTION REFERENCE P25

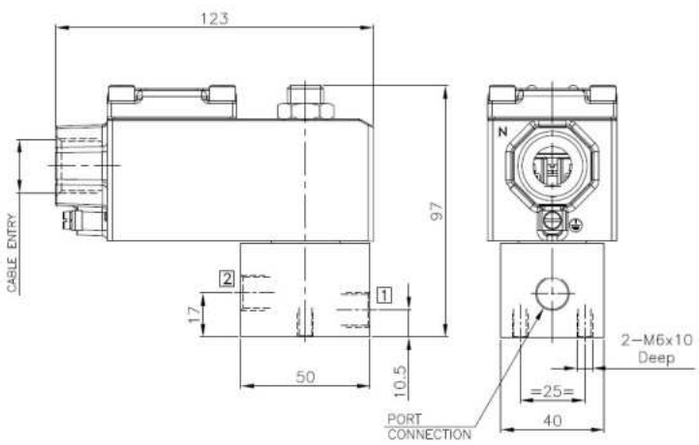

Specifications are subject to change without notice

VALVE BLOCK

TYPE	PRESSURE

TYPE	PRESSURE

TYPE	PRESSURE
MF37	0 - 8.5 bar
MF38	0 - 8.5 bar

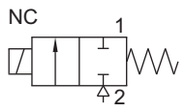

FEATURES

- Line mounted valve
- Ease of maintenance
- High Flow, quick response



WETTED PARTS

Code	※	B5
Body and Internals	Aluminium Die Cast	SS 316
Guide Assembly	SS 304	
Shadow-Ring	Copper	
Plunger, Insert	SS 430	
Diaphragm	Hytrel, Viton	
Fasteners	SS 304	
Seat, Seals	NBR, Viton	



SPECIFICATION

RESPONSE TIME 8 ms

AMBIENT TEMPERATURE

-30 ºC to 75 ºC

FLUID TEMPERATURE

-30 ºC to 75 ºC

PORT CONNECTION

FUNCTION	INLET	OUTLET
NC	2	1

SPARES

(Refer page 25 for ordering code)

SPARE KIT	CODE
Seal Kit : Oring Set and Plunger Assembly	98
Repair Kit : Oring Set, Plunger Assembly, Fastener, Springs, Guide Assembly	99
Solenoid Kit : Solenoid, Gasket	34

APPROVAL

(* applied for)

Approval	TYPE 4X, 6P	IP67	Ex d IIC T4 or T5 or T6 IP66	Ex ia IIC T6 IP67	DGMS	CCOE
ISI		✓	✓	✓	✓	✓
CE		✓	✓	✓		
UL	✓		*			
CCPEL			✓	✓		
EAC			✓	✓		
IECEx			✓	✓		

Contact Rotex for
- Any other ambient, fluid temperature, media and application

Specifications are subject to change without notice

ROTEX
Engineering For The Future

PILOT VALVE BLOCK

SPECIFICATION

PORT CONNECTION			PRE-SSURE bar		ORIFICE (mm)	FLOW FACTOR kv (LPM OF WATER @ 1 bar ΔP)	VALVE TYPE	PILOT PRESSURE	BODY MATERIAL AND INTERNALS				SEALS					MANUAL OVERRIDE			SOLENOID ENCLOSURE						SUFFIX		POWER VA			CONSTRUCTION REFERENCE NUMBER
																					WEATHER PROOF				EXPLOSION PROOF							
SIZE	BSP(F)	NPT(F)	MINIMUM	MAXIMUM					ALUMINIUM	ALUMINIUM + SS	BRASS (STD. PORT NPT)	SS 316/ CF8 (STD. PORT NPT)	NBR	Viton	EPDM	HYTREL	PTFE	NIL	STAYPUT CUM MOMENTARY	MOMENTARY	FLYING LEAD	PLUG IN, IP67	SQ. PLUG IN, IP67	TERMINAL BOX IP67	EXPLOSION PROOF IIC, IP67	LARGE ENCLOSURE	SOLENOID SIZE	OXYGEN	AMONIA	AC INRUSH	AC HOLDING	DC	
SINGLE SIDED MANIFOLD MOUNTED PILOT VALVE BLOCK																															
			0	8.5	3.5	5	MF 37-2		※				※	S2							F	22		T	E		14			18	12	8	P28
			0	8.5	3.5	5	MF 37-4		※				※	S2							F	22		T	E		14			18	12	8	P28
			0	8.5	3.5	5	MF 37-6		※				※	S2							F	22		T	E		14			18	12	8	P28
			0	8.5	3.5	5	MF 37-8		※				※	S2							F	22		T	E		14			18	12	8	P28
DOUBLE SIDED MANIFOLD MOUNTED PILOT VALVE BLOCK																															
1/4"	2G	2R	0	8.5	3.5	5	MF 38-4		※				※	S2							F	22		T	E		14			18	12	8	P29
			0	8.5	3.5	5	MF 38-6		※				※	S2							F	22		T	E		14			18	12	8	P29
			0	8.5	3.5	5	MF 38-8		※				※	S2							F	22		T	E		14			18	12	8	P29
			0	8.5	3.5	5	MF 38-10		※				※	S2							F	22		T	E		14			18	12	8	P29
			0	8.5	3.5	5	MF 38-12		※				※	S2							F	22		T	E		14			18	12	8	P29
			0	8.5	3.5	5	MF 38-14		※				※	S2							F	22		T	E		14			18	12	8	P29
			0	8.5	3.5	5	MF 38-16		※				※	S2							F	22		T	E		14			18	12	8	P29

Cable Entry	T	E									
		Ex d			Ex a		Ex emb				
M20 x 1.5	19	39	87	MS	66	MS	58	MS	58	LT	MS
M25 x 1.5			87		66		58		58	LT	
1/2" NPT	16	37	87	NS	66	NS	58	NS	58	LT	NS

	F
Flying lead IP54	※
Flying lead IP67	01

※ = Do not specify when opted for. Refer Page # 22 for Value of ※

ORDERING CODE, EXAMPLE

VALVE + SOLENOID

e.g. 1) MF 14-4+220V AC-22, 4 nos valve type 20159 mounted on single side of manifold having individual inlet and common outlet.
2) MF 15-16+24V DC-16,16 valve type 20139 mounted on double side of manifold having individual inlet and common outlet

DIMENSIONS

All Dimensions are in mm

CONSTRUCTION REFERENCE P28

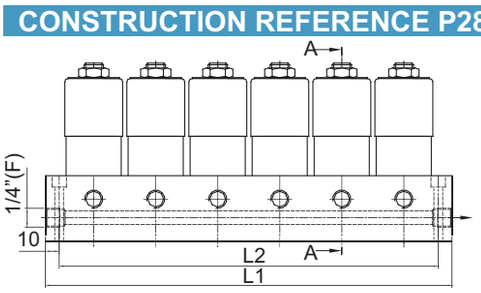

SINGLE SIDED MANIFOLD MOUNTED PILOT VALVE

DOUBLE SIDED MANIFOLD MOUNTED PILOT VALVE

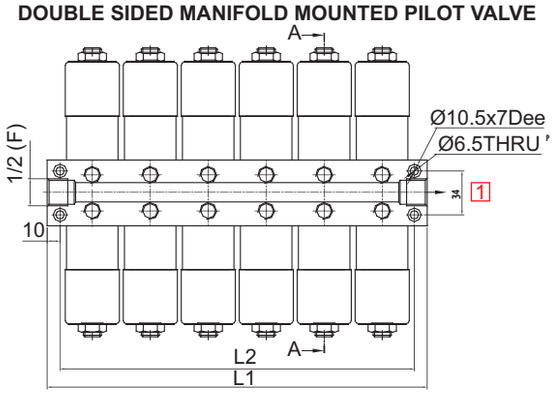

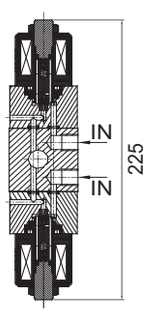

SECTION AA

TIM	NO. OF VALVES	20159	
	PER MANIFOLD	L1	L2
MF 37	02	115	95
MF 37	03	160	140
MF 37	04	205	185
MF 37	05	250	230
MF 37	06	295	275
MF 37	08		

Individual Inlet, Common Exhaust.

TIM	NO. OF VALVES	20159	
	PER MANIFOLD	L1	L2
MF 38	04	70	50
MF 38	06	115	95
MF 38	08	160	140
MF 38	10	205	185
MF 38	12	250	230
MF 38	14	295	275
MF 38	16		

Individual Inlet, Common Exhaust.

Specifications are subject to change without notice

PULSE JET VALVE WITH INTRINSICALLY SAFE SOLENOID



SPECIFICATION

3/4” to 3” valve can be operated with
Intrinsically safe Solenoid with booster circuit

AMBIENT TEMPERATURE

-5 ºC to 70 ºC

FLUID TEMPERATURE

-5 ºC to 70 ºC

PORT CONNECTION

FUNCTION	INLET	OUTLET
NC	2	1

SPARES

(Refer page 25 for ordering code)

SPARE KIT	CODE
Diaphragm Kit : Diaphragm Kit	100
Seal Kit : Oring Set Diaphragm Kit, Plunger Assembly	98
Repair Kit : Oring Set, Diaphragm Kit, Plunger Assembly, Fastener, Springs Silencer, Guide Assembly	99
Solenoid Kit : Solenoid, Gasket	34

APPROVAL

(* applied for)

Approval	Nema 4X	IP67	Ex d IIC T4 or T5 or T6 IP66	Ex ia IIC T6 IP67	DGMS	CCOE
ISI		✓	✓		✓	✓
CE		✓	✓			
UL	✓		*			
CCPEL			✓			
EAC			✓			
PESO			✓			

For valve detail refer to specification or individual page, Select solenoid code 66, 67, Due to response on time of the solenoid, switch on duration should be more than1.6 sec.

Specifications are subject to change without notice

ROTEX
Engineering For The Future

PULSE JET VALVE WITH INTRINSICALLY SAFE SOLENOID

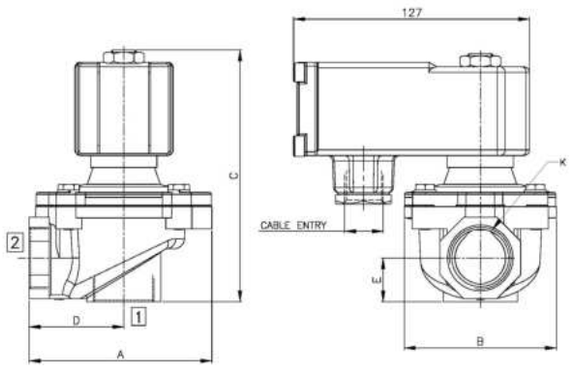

Ex ia SOLENOID WITH BOOSTER CIRCUIT

VALVE TYPE	PIPE CONN.	A	B	C	D	E
24108-28	3/4”	82	99	135	51	24
24108-28	1”	82	99	135	51	24

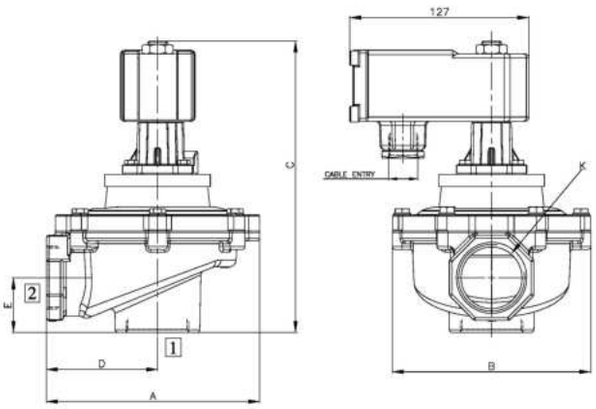

Ex ia SOLENOID WITH BOOSTER CIRCUIT

VALVE TYPE	NW	PIPE CONN.	A	B	C	D	E
24106	52	11/2”	152	141	205	79	39
24106	52	2”	152	141	205	79	39
24106	65	2”	180	169	232	96	46
24106	65	21/2”	180	169	232	96	46

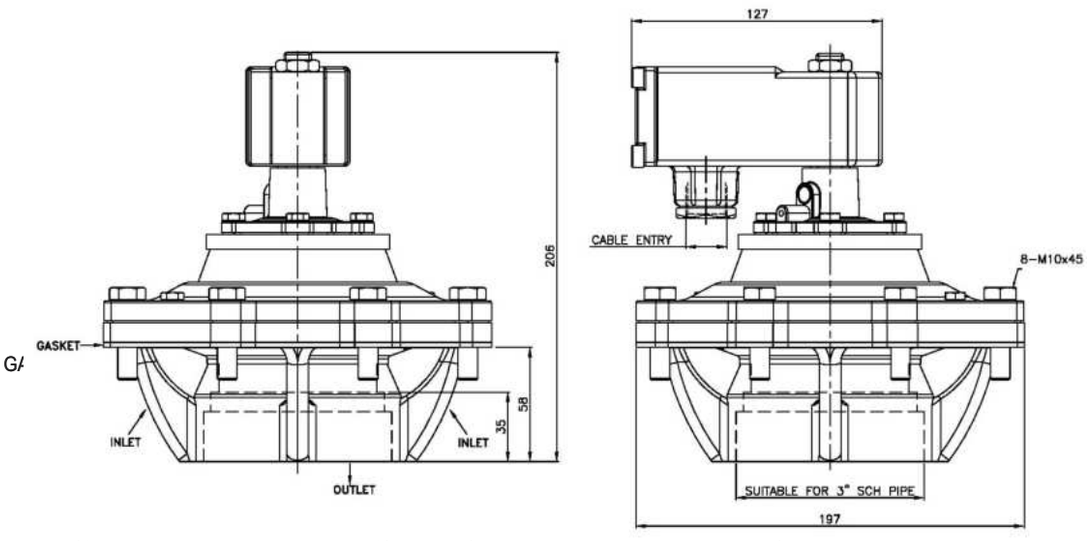

Ex ia SOLENOID WITH BOOSTER CIRCUIT

11

Specifications are subject to change without notice

ROTEX
Engineering For The Future

PULSE JET VALVE

ELECTRICAL

	Power	Inrush	Hold ON
AC	6 W	18 VA	12 VA
DC	8 W	8 VA	8 VA

Voltage Variation : ± 20%
Pick Up : ≤ 70% OF RATED VOLTAGE
Drop Down : ≥ 10% ≤ 30% OF RATED DC VOLTAGE
: ≤ 65% OF RATED AC VOLTAGE
Plunger Response : ≤ 8 ms

INSTALLATION SET UP

1 Set pressure in the tank.
2 Adjust electrical switch ON pulse increasing from minimum to ensure efficient cleaning of the bags.
3 Adjusting higher electrical pulse will result more air consumption.
4 Adjust duration between two pulses reasonably long. Too short duration will result in higher air consumption.

SOLENOID CONSTRUCTION

VOLTAGE
12
24
48
110
220
240

CURRENT
50 Hz
60 Hz
DC

SIZE
I
III

SOLENOID ENCLOSURE				
WEATHER PROOF		**EXPLOSION PROOF**		
TYPE		TYPE	CABLE ENTRY	
			1/2" NPT	M20 x 1.5
Flying Lead IP54	※	**FPJB Ex d IIC, T4 OR T5 OR T6, IP66**		
Flying Lead 600 mm	01			
Flying Lead 1500 mm	04			
Flying Lead 3000 mm	05	Side Cable Entry	37	39
Terminal Box 1/2" NPT, IP67	16	**INTRINSICALLY SAFE SOLENOID WITH CIRCUIT, Ex ia IIC T6, IP67**		
Terminal Box M20 X 1.5, IP67	19			
Plug in PG9 , IP67	22	Bottom Cable Entry	66NS	66MS
Square Plug IN, IP67	25			
36 mm wide Plug IN (size I), IP67	22			
TB multi pin connector, IP67	70			
SS Cast, Terminal Box 1/2" NPT, IP67	16-CO			
SS Cast, Terminal Box M20 X 1.5, IP67	19-CO			

Specifications are subject to change without notice

PULSE JET VALVE

ORDERING CODE

VALVE CODE

TYPE — ORIFICE — PORT CONNECTION

		Size	BSP	NPT
28	-	3/4”	6G	6R
28	-	1”	8G	8R
52	-	1.1/2”	12G	12R
52	-	2”	16G	16R
65	-	2”	16G	16R
65	-	21/2”	20G	20R
80	-	3”	24G	24R

BODY AND COVER	
Aluminium	※
SS	B5

DIAPHRAGM + SEAL	
HYTREL + NBR	※
EPDM	S1
Viton	S2
NBR	S0

SOLENOID CODE

SIZE — VOLTAGE — CURRENT — SOLENOID ENCLOSURE — SPECIAL VERSION — POWER — INSULATION — APPROVAL

ORDERING EXAMPLE

VALVE CODE + SOLENOID

eg. I. 24108-28-8G+B12-S0+III-24VDC-37-C0-H-01
II. 24106-52-12G+III-220V-50Hz-16
III. 100-24108-28-6R-B5-S2 is diaphragm and plunger assembly of viton for valve type 24108-28
IV. Spare Solenoid
I-230V-50 Hz-16-F
V. Valve Spare

VALVE SPARES

SPARE CODE — TYPE — a — b — c — d

Spare Part description	
Diaphragm Assembly	100
Repair Kit	99
Seal Kit	98

VALVE TYPE | ORIFICE | PORT CONNECTION | BODY AND COVER

DIAPHRAGM + SEAL	
HYTREL + NBR	※
Viton	S2
NBR	S0

DIAPHRAGM KIT: Diaphragm Assembly
REPAIR KIT : Set of O rings, Plunger Assembly, Diaphragm Assembly, Fasteners, Guide Assembly
SEAL KIT : Set of O rings, Plunger Assembly, Diaphragm set

SPARE SOLENOID

34 — SIZE — VOLTAGE — CURRENT — SOLENOID ENCLOSURE — SPECIAL VERSION — POWER — INSULATION — APPROVAL

Refer page 424 to 432 for the information regarding the Solenoid or Refer label affixed on the ROTEX Solenoid.

ROTEX
Engineering For The Future

GAS OVER OIL CONTROL CABINET



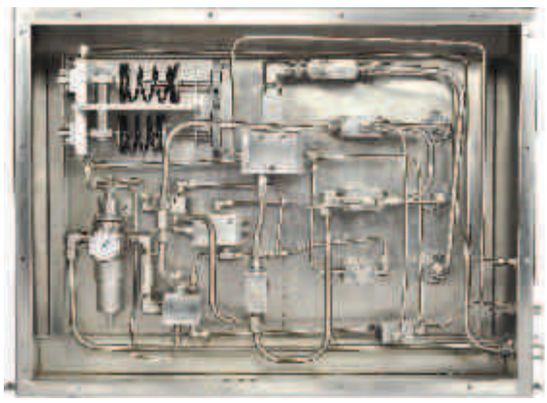

SM

Function

To operate double acting actuator cylinder

The Cabinet has logic for.

1. Operating actuator when the line pressure is healthy (within the set limits)
2. Operating actuator for partial stroking.
3. Manual Reset function ie to close the actuator when line pressure falls either below or above set value and once closed the actuator does not operate even it line pressure is resumed, till the same is set manually.

System pressure : 150 bar
Signal pressure : 3 - 16 bar

TYPE : GOV C1



SM

Control Cabinet

To operate double acting actuator mounted on gas line.

- Torque limiting valve
- Pressure limiting valve
- Auto emergency shut down serving line breakup.
- Hydraulic manual over ride.

TYPE : GOV C2

CONTACT ROTEX BEFORE SELECTING THIS ITEM

Specifications are subject to change without notice

GAS OVER OIL CONTROL CABINET VALVE



SM

HI LOW PRESSURE CUT OFF VALVE

FUNCTION

The Valve provides signal when pressure is within the two set limits.
The pneumatic signal is cut off when pressure is either above or below set limit
Pneumatic pressure 0 - 16 bar
Line pressure 0 - 15 bar

TYPE : CB2



SM

TORQUE LIMITING VALVE

FUNCTION

The valve is cut off when pressure in the line increase above set pressure there by Limiting torque/ force which actuator/ cylinder can generate once the valve has to be set/ manually by external pilot.

Pressure Line	:	10 - 100 bar
Pilot	:	25 - 150 bar
Control	:	5 - 16 bar

TYPE : TLV4



SM

LINE BREAK VALVE

FUNCTION

Monitor healthiness of up and down stream pressure.
Cut off the valve when any of the pressure fails. Once fail the valve can be reset manually.

Pressure	Up stream	:	50 - 150 bar
Pressure	Down stream	:	50 - 150 bar
Pressure	Control pressure	:	0 - 150 bar

TYPE : LBV2

CONTACT ROTEX BEFORE SELECTING THIS ITEM

*Valve having Aluminium hard anodized body may have minor leakage across port
Valve body material is normally from Stainless Steel
OIL Media Temperature Restricted from 0 °C to 100 °C

Specifications are subject to change without notice

GAS OVER OIL CONTROL CABINET VALVE

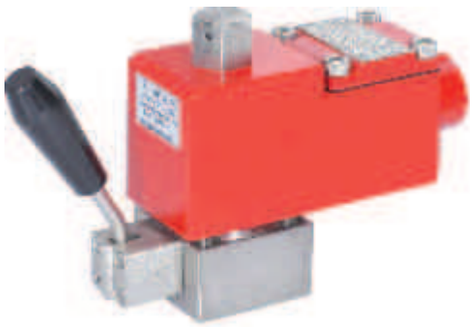

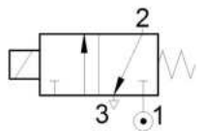

3/2 normally closed Solenoid valve
Pressure 0 - 150 bar
Media gas, oil, air etc.
Ports : Threaded, sub base mounted
Body material SS 316/ Aluminium hard anodized

TYPE : 30150V02 (11W) / 30150V03 (8W) Subbase Port
30152V01 Threaded Port



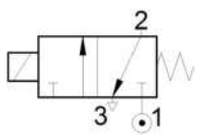

3/2, NC solenoid valve
Pressure 0 - 150 bar
Media gas, oil, air, etc.
Ports : Sub base mounted. (No manual override).
Inter valve body material SS 316/ Aluminium hard anodized

TYPE : 30150V02 (11W) / 30150V03 (8W) Subbase
30152V01 Threaded Port



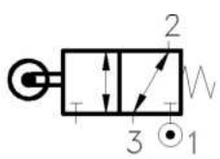

3/2 Roller operated Valve
Pressure 0 - 150 bar
Media gas, oil, air, etc.
Ports : threaded
Body material SS 316

TYPE : DSA201- SU



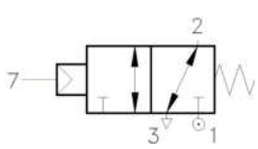

3/2 Air operated valve
Pressure 0 - 150 bar
Media gas, oil, air, etc.
Media pressure 0 - 150 bar
Pilot pressure 5 - 150 bar
Pilot pressure minimum 5 bar or ≥ main fluid pressure whichever is higher.
Pilot media Air/ Gas/ Oil
Body material SS 316

TYPE : 3359V01 Air Operated
3383 Solenoid Operated

*Valve having Aluminium hard anodized body may have minor leakage across port
Valve body material is normally from Stainless Steel
OIL Media Temperature Restricted from 0 °C to 100 °C

GAS OVER OIL CONTROL CABINET VALVE

GENERAL FEATURE

3/2 and 5/2 Valve
Body : Stainless Steel SS 316L/ Aluminium hard anodized*
Port Connection 1/4" NPT(F)
Orifice : 6.7 mm
Seal : Viton GLT/ NBR
Pilot, Main Media : Air, Water, Gas, Oil
3/2 valve can be used as NC/ NO/ Universal
Pressure : 0 - 16 bar

Type : 7210

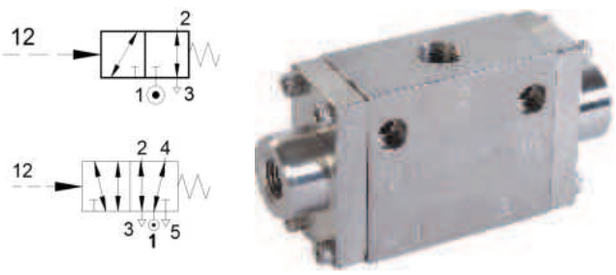

3/2, 5/2 Air Operated Spring Return
Pilot Pressure : 3.5 - 16 bar
Suitable for Panel mounting

Type	Model	
	Size 1/4"	Size 1/2"
3/2	GDAF 7210	GDAF 7410
5/2	GVAF 7210	GVAF 7410

Type : 7211

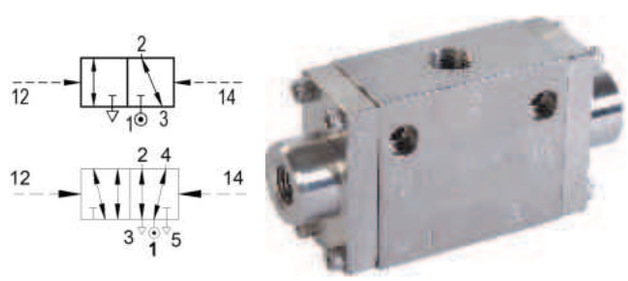

3/2, 5/2 Air Operated Air Return Valve
Pilot Pressure : 1.2 - 16 bar
Suitable for Panel mounting

Type	Model	
	Size 1/4"	Size 1/2"
3/2	GDAF 7211	GDAF 7411
5/2	GVAF 7211	GVAF 7411

Type : 7210M1



3/2, 5/2 Air Operated Spring Return with Manual Override
Pilot Pressure : 3.5 - 16 bar
Suitable for Panel mounting

Type	Model	
	Size 1/4"	Size 1/2"
3/2	GDAF 7210M1	GDAF 7410M1
5/2	GVAF 7210M1	GVAF 7410M1

Type : 7210M2

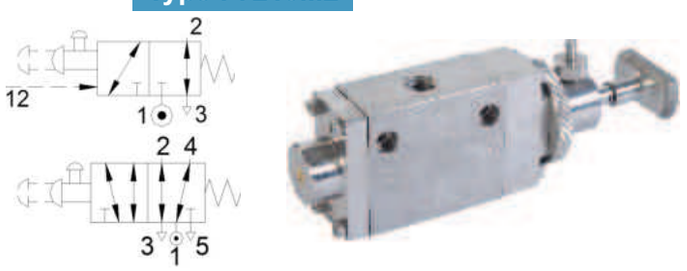

3/2, 5/2 Air Operated Spring Return with Lockable Manual Override
Pilot Pressure : 3.5 - 16 bar
Suitable for Panel mounting

Type	Model	
	Size 1/2"	Size 1/2"
3/2	GDAF 7210M2	GDAF 7410M2
5/2	GVAF 7210M2	GVAF 7410M2

Type : 7211M1



3/2, 5/2 Air Operated Air Return Valve with Manual Override
Pilot Pressure : 1.5 - 16 bar
Suitable for Panel mounting

Type	Model	
	Size 1/4"	Size 1/2"
3/2	GDAF 7211M1	GDAF 7411M1
5/2	GVAF 7211M1	GVAF 7411M1

*Valve having Aluminium hard anodized body may have minor leakage across port
Valve body material is normally from Stainless Steel
OIL Media Temperature Restricted from 0 °C to 100 °C

ROTEX
Engineering For The Future

GAS OVER OIL CONTROL CABINET VALVE

Type : 7232



3/2, 5/2 Low Pilot Pressure Air Operated Spring Return Valve
Pilot Pressure : 1 - 16 bar
Suitable for Panel mounting

Type	Model	
	Size 1/4"	Size 1/2"
3/2	GDAF 7232	GDAF 7432
5/2	GVAF 7232	GVAF 7432

Type : 7232M1



3/2, 5/2 Low Pilot Pressure Air Operated Spring Return with Manual Override
Pilot Pressure : 1 - 16 bar
Suitable for Panel mounting

Type	Model	
	Size 1/4"	Size 1/4"
3/2	GDAF 7232M1	GDAF 7432M1
5/2	GVAF 7232M1	GVAF 7432M1

Type : 7232M2



3/2, 5/2 Low Pilot Pressure Air Operated Spring Return with Lockable Manual Override
Pilot Pressure : 1 - 16 bar
Suitable for Panel mounting

Type	Model	
	Size 1/4"	Size 1/2"
3/2	GDAF 7232M2	GDAF 7432M2
5/2	GVAF 7232M2	GVAF 7432M2

Type : 7204



3/2, 5/2 Hand Operated Hand Return Valve
Suitable for Panel mounting

Type	Model	
	Size 1/4"	Size 1/2"
3/2	GDAF 7204	GDAF 7404
5/2	GVAF 7204	GVAF 7404

Type : 7205



3/2, 5/2 Hand Operated Spring Return Valve
Suitable for Panel mounting

Type	Model	
	Size 1/4"	Size 1/2"
3/2	GDAF 7205	GDAF 7405
5/2	GVAF 7205	GVAF 7405

Type : 7205M1, 7205M2



3/2, 5/2 Hand Operated Spring Return Valve with Lockable Manual Override

Type	Model	
	Size 1/4"	Size 1/2"
3/2	GDAF 7205M2	GDAF 7405M2
5/2	GVAF 7205M2	GVAF 7405M2

* Valve with suffix M1 is without locking pin

Valve having Aluminium hard anodized body may have minor leakage across port
Valve body material is normally from Stainless Steel
OIL Media Temperature Restricted from 0 °C to 100 °C

11

Specifications are subject to change without notice

GAS OVER OIL CONTROL CABINET VALVE

GENERAL FEATURE

3/2 and 5/2 Valve
Body : Stainless Steel SS 316L/ Aluminium hard Anodized*
Port Connection 1/4" NPT(F)
Orifice : 6.7 mm
Seal : Viton GLT/ NBR
Pilot, Main Media : Air, Water, Gas, Oil
3/2 valve ready to use as NC/ NO/ Universal
Pressure : 0 - 16 bar

Type : 7210MR1

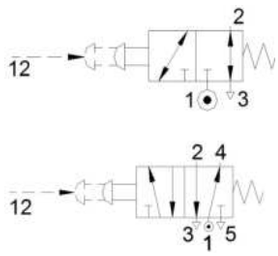



3/2, 5/2 Air Operated Spring Return with Manual Reset Valve. Valve does not operate with Pilot Signal till set manually by pulling Knob. The valve reset when pilot signal is removed.
Pilot Pressure : 3.5 - 16 bar

Type	Model	
	Size 1/4"	Size 1/2"
3/2	GDAF 7210MR1	GDAF 7410MR1
5/2	GVAF 7210MR1	GVAF 7410MR1

11

Valve having Aluminium hard anodized body may have minor leakage across port
Valve body material is normally from Stainless Steel
OIL Media Temperature Restricted from 0 °C to 100 °C

ROTEX
Engineering For The Future

GAS OVER OIL CONTROL CABINET VALVE

GENERAL FEATURE

3/2 and 5/2 Valve
Body : Stainless Steel SS316L/ Aluminium hard Anodized
Port Connection 1/4" NPT(F)
Main Pressure : 0-350 for 8 series valve
0-150 for 9 series valve
Pilot Pressure : 10-150 for 9 series valve
10-350 for 8 series valve
Orifice : 6.7 mm
Seal/ O ring : PTFE+Viton GLT/ PTFE+NBR
Pilot, Main Media : Air, Water, Gas, Oil
Size : 1/4" NPT

Type : 8210/ 9210



3/2, 5/2 Air Operated Spring Return Valve

Type	Pressure 350 bar	Pressure 150 bar
3/2	GDAF 8210	GDAF 9210
5/2	GVAF 8210	GVAF 9210

Type : 9211/ 8211

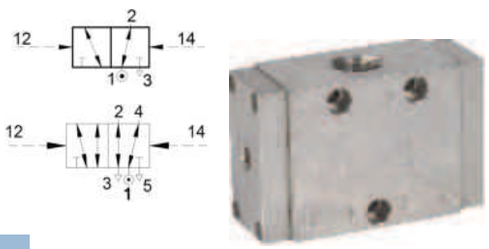

3/2, 5/2 Air Operated Air Return Valve

Type	Pressure 350 bar	Pressure 150 bar
3/2	GDAF 8211	GDAF 9211
5/2	GVAF 8211	GVAF 9211

Type : 9232/ 8232



3/2, 5/2 Air Operated Spring Return Valve
Low Pilot Pressure: 5 - 160 bar

Type	Pressure 350 bar	Pressure 150 bar
3/2	GDAF 8232	GDAF 9232
5/2	GVAF 8232	GVAF 9232

Type : 8205/ 9205



3/2, 5/2 Hand Operated Spring Return Valve

Type	Pressure 350 bar	Pressure 150 bar
3/2	GDAF 8205	GDAF 9205
5/2	GVAF 8205	GVAF 9205

Type : 8204/ 9204

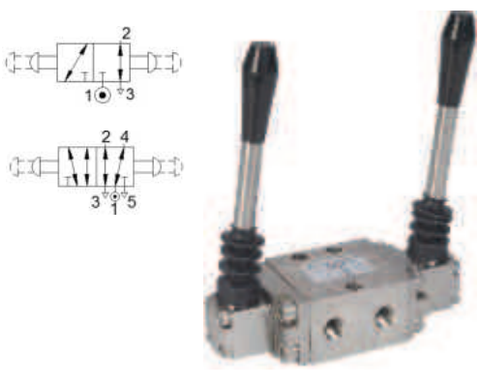

3/2, 5/2 Hand Operated Hand Return

Type	Pressure 350 bar	Pressure 150 bar
3/2	GDAF 8204	GDAF 9204
5/2	GVAF 8204	GVAF 9204

⚠ OIL Media Temperature Restricted from 0 °C to 100 °C

Specifications are subject to change without notice

GAS OVER OIL CONTROL CABINET VALVE

TYPE	PORT SIZE NPT(F)	MODEL	PRESSURE (bar)	ACTION	OPERATING COVER Ref (mm)	HOUSING Ref (mm)	RETURN COVER Ref (mm)	TOTAL LENGTH(mm)
3/2	1/4”	GDAF7204	0-16	HAND OPERATED HAND RETURN	3 (89)	A (62)	2 (23)	174
3/2	1/4”	GDAF7205	0-16	HAND OPERATED SPRING RETURN	3 (89)	A (62)	2 (23)	174
3/2	1/4”	GDAF7205M2	0-16	HAND OPERATED SPRING RETURN WITH KNOB OPERATED LOCKING ARRANGEMENT	4 (89)	A (62)	2 (23)	174
3/2	1/4”	GDAF7210	0-16	AIR OPERATED SPRING RETURN	1 (23)	A (62)	2 (23)	108
3/2	1/4”	GDAF7210M1	0-16	AIR OPERATED SPRING RETURN WITH KNOB OPERATED	1 (23)	A (62)	3 (89)	174
3/2	1/4”	GDAF7210M2	0-16	AIR OPERATED SPRING RETURN WITH KNOB OPERATED LOCKING ARRANGEMENT	1 (23)	A (62)	4 (89)	174
3/2	1/4”	GDAF7210MR1	0-16	AIR OPERATED SPRING RETURN WITH MANUAL RESET KNOB	1 (23)	A (62)	3 (89)	174
3/2	1/4”	GDAF7211	0-16	AIR OPERATED AIR RETURN	1 (23)	A (62)	1 (23)	108
3/2	1/4”	GDAF7211M1	0-16	AIR OPERATED AIR RETURN KNOB OPERATED	1 (23)	A (62)	9 (89)	174
3/2	1/4”	GDAF7232	0-16	AIR OPERATED SPRING RETURN (LOW PILOT PRESSURE)	15 (81)	A (62)	2 (23)	166
3/2	1/4"	GDAF7232M1	0-16	AIR OPERATED SPRING RETURN (LOW PILOT PRESSURE KNOB OPERATED)	15 (81)	A (62)	3 (89)	232
3/2	1/4”	GDAF7232M2	0-16	AIR OPERATED SPRING RETURN (LOW PILOT PRESSURE) WITH KNOB OPERATED LOCKING ARRANGEMENT	15 (81)	A (62)	4 (89)	232
3/2	1/4”	GDAF9204	0-150	HAND OPERATED HAND/ KNOB RETURN	14 (63)	E (62)	8 (12)	137
3/2	1/4”	GDAF9205	0-150	HAND OPERATED SPRING RETURN	14 (63)	E (62)	11 (73)	196
3/2	1/4”	GDAF9210	0-150	AIR OPERATED SPRING RETURN	12 (27)	E (62)	11 (73)	162
3/2	1/4”	GDAF9210MR1	0-150	AIR OPERATED SPRING RETURN WITH MANUAL RESET KNOB	5 (12)	E (62)	19 (136)	210
3/2	1/4”	GDAF9211	0-150	AIR OPERATED AIR RETURN	12 (27)	E (62)	12 (27)	116
3/2	1/4”	GDAF9232	0-150	AIR OPERATED SPRING RETURN (LOW PILOT PRESSURE)	13 (86)	E (62)	11 (73)	221
3/2	1/4”	GDAF8204	0-350	HAND OPERATED HAND RETURN	14 (63)	E (62)	14 (63)	188
3/2	1/4”	GDAF8210	0-350	AIR OPERATED SPRING RETURN	12 (27)	E (62)	11 (73)	162
3/2	1/4”	GDAF8211	0-350	AIR OPERATED AIR RETURN	12 (27)	E (62)	12 (27)	116
3/2	1/4”	GDAF8232	0-350	AIR OPERATED SPRING RETURN (LOW PILOT PRESSURE)	13 (86)	E (62)	11(73)	221
3/2	1/2”	GDAF7404	0-16	KNOB OPERATED HAND RETURN	7 (89)	C (72)	8 (12)	173
3/2	1/2”	GDAF7405	0-16	KNOB OPERATED SPRING RETURN	7 (89)	C (76)	8 (12)	177
3/2	1/2”	GDAF7405M2	0-16	HAND OPERATED SPRING RETURN WITH KNOB OPERATED WITH LOCKING ARRANGEMENT	10 (89)	C (76)	8 (12)	177
3/2	1/2”	GDAF7410	0-16	AIR OPERATED SPRING RETURN	5 (12)	C (76)	8 (12)	100
3/2	1/2”	GDAF7410M1	0-16	AIR OPERATED SPRING RETURN KNOB OPERATED	5 (120	C (76)	7 (89)	177
3/2	1/2”	GDAF7410M2	0-16	AIR OPERATED SPRING RETURN WITH KNOB OPERATED LOCKING ARRANGEMENT	5 (12)	C (76)	10 (89)	177
3/2	1/2”	GDAF7410MR1	0-16	AIR OPERATED SPRING RETURN WITH MANUAL RESET KNOB	5 (12)	C (76)	7 (89)	177
3/2	1/2”	GDAF7411	0-16	AIR OPERATED AIR RETURN	5 (12)	C (76)	5 (12)	100

Specifications are subject to change without notice

ROTEX
Engineering For The Future

GAS OVER OIL CONTROL CABINET VALVE

TYPE	PORT SIZE NPT(F)	MODEL	PRESSURE (bar)	ACTION	OPERATING COVER Ref (mm)	HOUSING Ref (mm)	RETURN COVER Ref (mm)	TOTAL LENGTH(mm)
3/2	1/2”	GDAF7411M1	0-16	AIR OPERATED AIR RETURN WITH KNOB OPERATED	5 (12)	C (76)	6 (89)	177
3/2	1/2”	GDAF7432	0-16	AIR OPERATED SPRING RETURN (LOW PILOT PRESSURE)	16 (70)	C (76)	8 (12)	158
3/2	1/2”	GDAF7432M1	0-16	AIR OPERATED SPRING RETURN (LOW PILOT PRESSURE) WITH KNOB OPERATED	16 (70)	C (76)	7 (89)	235
3/2	1/2”	GDAF7432M2	0-16	AIR OPERATED SPRING RETURN (LOW PILOT PRESSURE) WITH KNOB OPERATED LOCKING ARRANGEMENT	16 (70)	C (76)	10 (89)	235
3/2	1/2”	GDAF9404	0-150	HAND OPERATED HAND RETURN	14 (63)	C (76)	8 (12)	151
3/2	1/2”	GDAF9405	0-150	HAND OPERATED SPRING RETURN	14 (63)	C (76)	11 (73)	212
3/2	1/2”	GDAF9410	0-150	AIR OPERATED SPRING RETURN	12 (27)	C (76)	11 (73)	176
3/2	1/2”	GDAF9410MR1	0-150	AIR OPERATED SPRING RETURN WITH MANUAL RESET KNOB	5 (120)	C (76)	19 (136)	224
3/2	1/2”	GDAF9411	0-150	AIR OPERATED AIR RETURN	12 (27)	C (76)	12 (27)	130
3/2	1/2”	GDAF9432	0-150	AIR OPERATED SPRING RETURN (LOW PILOT PRESSURE)	13 (86)	C (76)	11 (73)	235
3/2	1/2”	GDAF8404	0-350	HAND OPERATED HAND RETURN	14 (63)	C (76)	14 (63)	202
3/2	1/2”	GDAF8405	0-350	HAND OPERATED SPRING RETURN	14 (63)	C (76)	11 (73)	212
3/2	1/2”	GDAF8411	0-350	AIR OPERATED AIR RETURN	12 (27)	C (76)	12(27)	130
3/2	1/2”	GDAF8432	0-350	AIR OPERATED SPRING RETURN (LOW PILOT PRESSURE)	13 (86)	C (76)	11 (73)	235
5/2	1/4”	GVAF7204	0-16	HAND OPERATED HAND RETURN	3 (89)	D (27)	2 (23)	184
5/2	1/4”	GVAF7205	0-16	HAND OPERATED SPRING RETURN	3 (89)	D (27)	2 (23)	184
5/2	1/4”	GVAF7205M2	0-16	HAND OPERATED SPRING RETURN WITH KNOB OPERATED WITH LOCKING ARRANGEMENT	4 (89)	B (62)	2 (23)	174
5/2	1/4”	GVAF7210M1	0-16	AIR OPERATED SPRING RETURN WITH KNOB OPERATED	1 (23)	B (72)	2 (89)	184
5/2	1/4”	GVAF7210MR1	0-16	AIR OPERATED SPRING RETURN WITH MANUAL RESET KNOB	1 (23)	B (72)	3 (89)	184
5/2	1/4”	GVAF7211	0-16	AIR OPERATED AIR RETURN	1 (23)	B (72)	1 (23)	118
5/2	1/4”	GVAF7210M1	0-16	AIR OPERATED HAND RETURN	1 (23)	B (72)	9 (89)	184
5/2	1/4”	GVAF7232	0-16	AIR OPERATED SPRING RETURN (LOW PILOT PRESSURE)	15 (85)	B (72)	2 (23)	180
5/2	1/4”	GVAF7232M1	0-16	AIR OPERATED SPRING RETURN (LOW PILOT PRESSURE) WITH KNOB OPERATED	15 (85)	B (72)	3 (89)	246
5/2	1/4”	GVAF7232M2	0-16	AIR OPERATED SPRING RETURN (LOW PILOT PRESSURE) WITH KNOB OPERATED LOCKING ARRANGEMENT	15 (85)	B (72)	4 (89)	246
5/2	1/4”	GVAF9204	0-150	HAND OPERATED HAND RETURN	14 (63)	F (95)	8 (12)	170
5/2	1/4”	GVAF9205	0-150	HAND OPERATED SPRING RETURN	14 (63)	F (950	11 (73)	231
5/2	1/4”	GVAF9210	0-150	AIR OPERATED SPRING RETURN	12 (27)	F (95)	11 (73)	195
5/2	1/4”	GVAF9210MR1	0-150	AIR OPERATED SPRING RETURN WITH MANUAL RESET KNOB	5 (12)	F (95)	19 (136)	243
5/2	1/4”	GVAF9211	0-150	AIR OPERATED AIR RETURN	12 (27)	F (95)	12 (27)	149
5/2	1/4”	GVAF9232	0-150	AIR OPERATED SPRING RETURN (LOW PILOT PRESSURE)	13 (86)	F (95)	11 (73)	254
5/2	1/4”	GVAF8204	0-350	HAND OPERATED HAND RETURN	14 (63)	F (95)	14 (63)	221
5/2	1/4”	GVAF8205	0-350	HAND OPERATED SPRING RETURN	14 (63)	F (95)	11 (73)	231
5/2	1/4”	GVAF8210	0-350	AIR OPERATED SPRING RETURN	12 (27)	F (95)	11 (73)	195
5/2	1/4”	GVAF8211	0-350	AIR OPERATED AIR RETURN	12 (27)	F(95)	12 (27)	149
5/2	1/4”	GVAF8232	0-350	AIR OPERATED SPRING RETURN (LOW PILOT PRESSURE)	13 (86)	F (95)	11 (73)	254
5/2	1/2”	GVAF7404	0-16	HAND OPERATED HAND RETURN	7 (89)	D (110)	8 (12)	211
5/2	1/2”	GVAF7405	0-16	HAND OPERATED SPRING RETURN	7 (89)	D (110)	8 (12)	211

Specifications are subject to change without notice

GAS OVER OIL CONTROL CABINET VALVE

TYPE	PORT SIZE NPT(F)	MODEL	PRESSURE (bar)	ACTION	OPERATING COVER Ref (mm)	HOUSING Ref (mm)	RETURN COVER Ref (mm)	TOTAL LENGTH(mm)
5/2	1/2"	GVAF7405M2	0-16	HAND OPERATED SPRING RETURN WITH KNOB OPERATED WITH LOCKING ARRANGEMENT	10 (89)	D (110)	8 (12)	211
5/2	1/2"	GVAF7410	0-16	AIR OPERATED SPRING RETURN	5 (12)	D (110)	8 (12)	134
5/2	1/2"	GVAF7410M1	0-16	AIR OPERATED SPRING RETURN WITH KNOB OPERATED	5 (12)	D (110)	7 (89)	211
5/2	1/2"	GVAF7410MR1	0-16	AIR OPERATED SPRING RETURN WITH KNOB OPERATED LOCKING ARRANGEMENT	5 (12)	D (110)	10 (89)	211
5/2	1/2"	GVAF7410MR1	0-16	AIR OPERATED SPRING RETURN WITH MANUAL RESET KNOB	5 (12)	D (110)	7 (89)	211
5/2	1/2"	GVAF7411	0-16	AIR OPERATED AIR RETURN	5 (12)	D (110)	5 (12)	134
5/2	1/2"	GVAF7411M1	0-16	AIR OPERATED AIR RETURN WITH KNOB OPERATED	5 (12)	D (110)	6 (89)	211
5/2	1/2"	GVAF7432	0-16	AIR OPERATED SPRING RETURN (LOW PILOT PRESSURE)	16 (70)	D (110)	8 (12)	192
5/2	1/2"	GVAF7432M1	0-16	AIR OPERATED SPRING RETURN (LOW PILOT PRESSURE) WITH KNOB OPERATED	16 (70)	D (110)	7 (89)	269
5/2	1/2"	GVAF7432M2	0-16	AIR OPERATED SPRING RETURN (LOW PILOT PRESSURE) WITH KNOB OPERATED LOCKING ARRANGEMENT	16 (70)	D (110)	7 (89)	269
5/2	1/2"	GVAF9404	0-150	HAND OPERATED HAND RETURN	14 (63)	D (110)	8 (12)	185
5/2	1/2"	GVAF9405	0-150	HAND OPERATED SPRING RETURN	14 (63)	D (110)	11 (73)	246
5/2	1/2"	GVAF9410	0-150	AIR OPERATED SPRING RETURN	12 (27)	D (110)	11 (73)	210
5/2	1/2"	GVAF9410MR1	0-150	AIR OPERATED SPRING RETURN WITH MANUAL RESET KNOB	5 (12)	D (110)	19 (136)	258
5/2	1/2"	GVAF9411	0-150	AIR OPERATED AIR RETURN	12 (27)	D (110)	12 (27)	164
5/2	1/2"	GVAF9432	0-150	AIR OPERATED SPRING RETURN (LOW PILOT PRESSURE)	13 (86)	D (110)	11 (73)	269
5/2	1/2"	GVAF8404	0-350	HAND OPERATED HAND RETURN	14 (63)	D (110)	14 (63)	235
5/2	1/2"	GVAF8405	0-350	HAND OPERATED SPRING RETURN	14 (63)	D (110)	11 (73)	246
5/2	1/2"	GVAF8410	0-350	AIR OPERATED SPRING RETURN	12 (27)	D (110)	11 (73)	210
5/2	1/2"	GVAF8411	0-350	AIR OPERATED AIR RETURN	12 (27)	D (110)	12 (27)	164
5/2	1/2"	GVAF8432	0-350	AIR OPERATED SPRING RETURN (LOW PILOT PRESSURE)	13 (86)	D (110)	11 (73)	269

Please select the valve model from the table above.
For details about body cover refer to page 388 and 389
An example of drawing of valve type GDAF7210M2 is as under

1	A	4

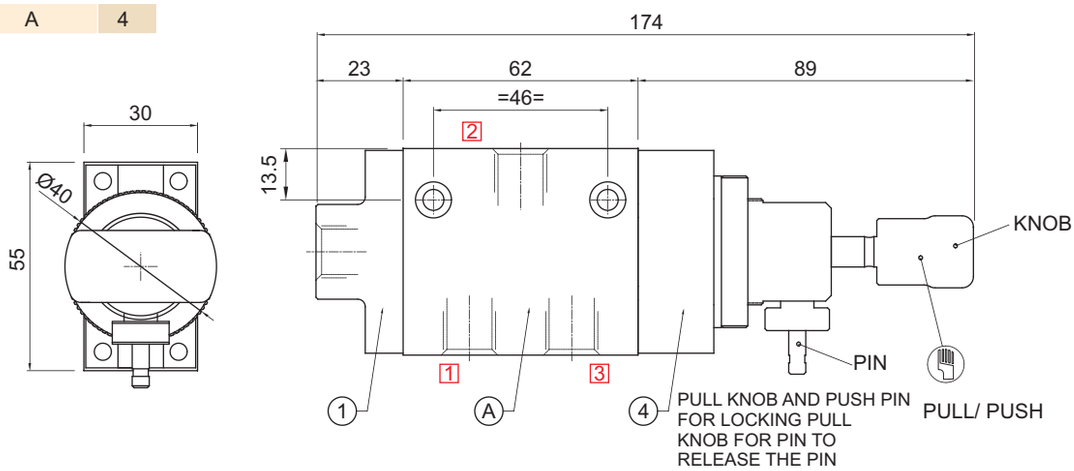

Contact Rotex in case if you do not find the valve as per your requirement

ROTEX
Engineering For The Future

GAS OVER OIL CONTROL CABINET VALVE

A Body GDAF 72XX

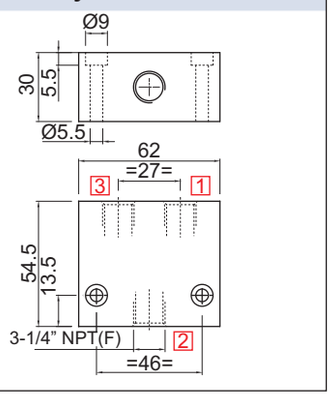

B Body GVAF 72XX

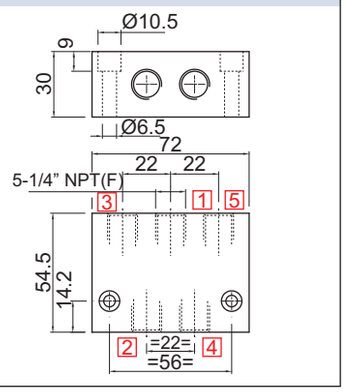

C Body GDAF 74X4, 84X4, 94X4

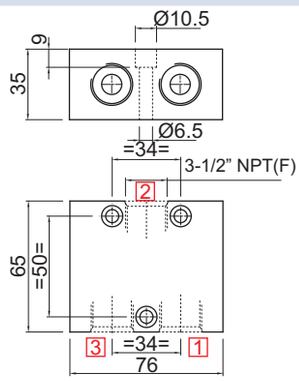

D Body GVAF 74XX, 84XX,94XX

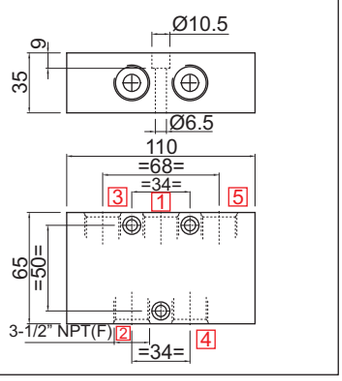

E Body GDAF 82XX, 92XX

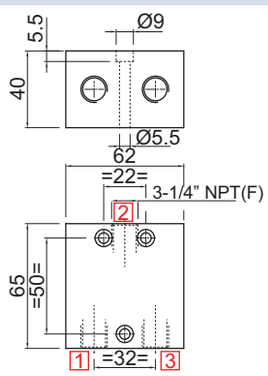

F Body GVAF 82XX, 92XX

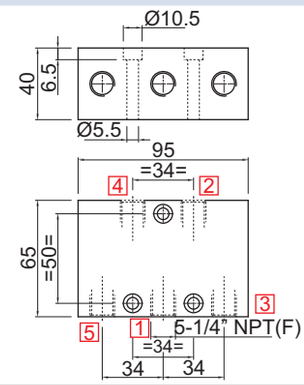

1 Air Cover for body A and B

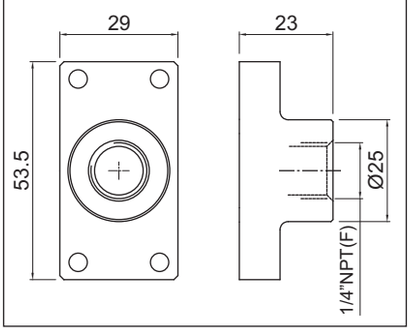

2 Spring Cover for body A and B

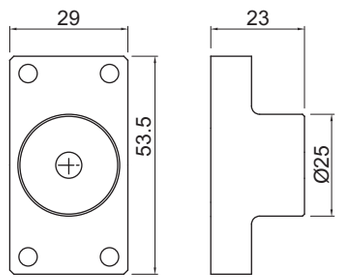

3 Lever Cover for body A and B

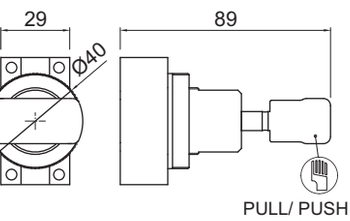

4 Manual Cover with Locking for body A and B

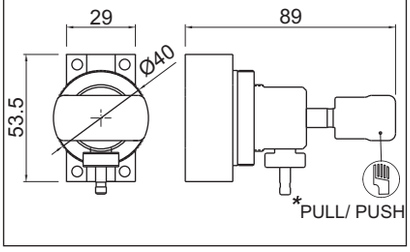

5 Air Cover body C and D

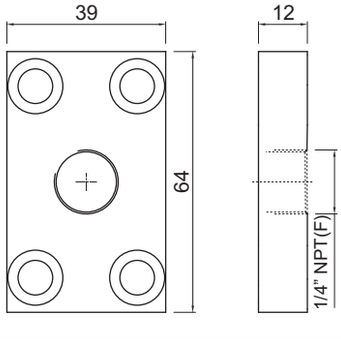

6 Cover for Lever and Air Pilot for body C and D

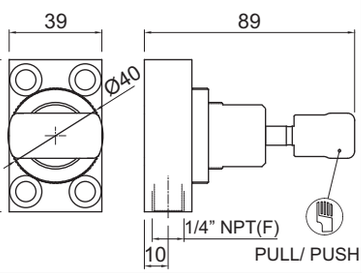

11

Specifications are subject to change without notice

GAS OVER OIL CONTROL CABINET VALVE

7 Lever Cover for body C and D

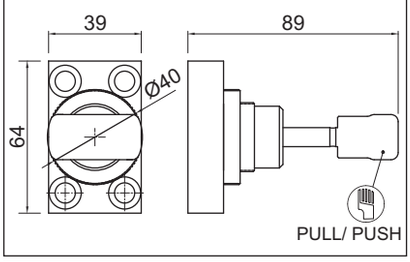

8 Spring Cover for body C and D

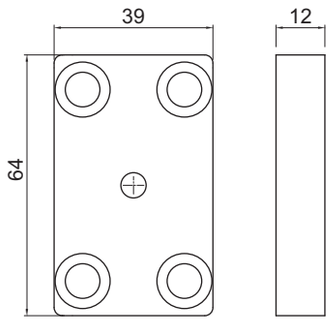

9 Lever Cover with Pilot air for body A and B

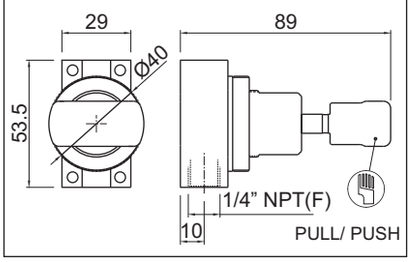

10 Lever Cover with lockable pin for body C and D

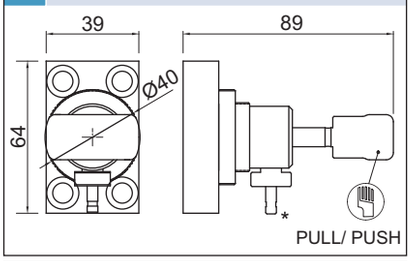

11 Spring Cover for body C, D and F.

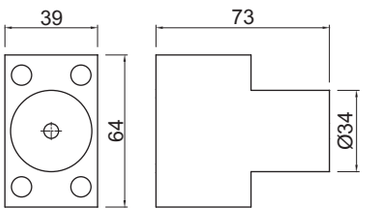

12 Air Cover for body C, D and F

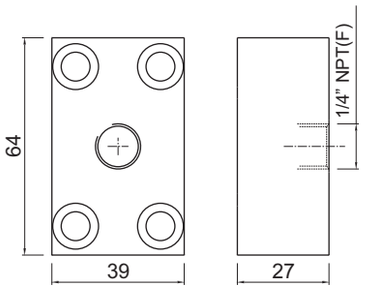

13 Low Pilot Air Cover for body C, D, E and F

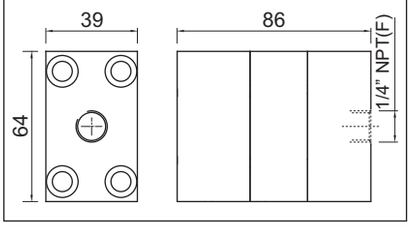

14 Lever Cover for body C, D, E and F

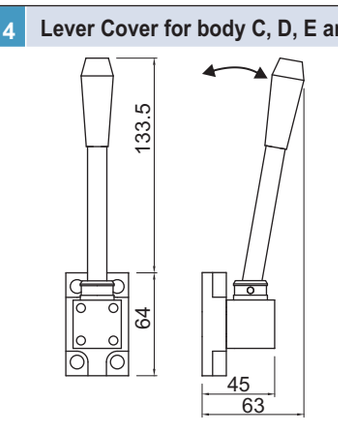

15 Low Pilot Air Cover for body A and B

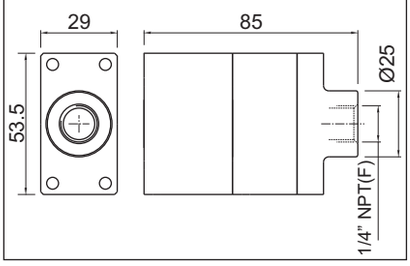

16 Low Pilot Air Cover for body C, D, E and F

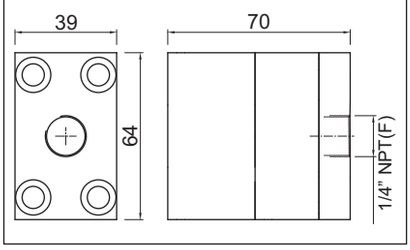

17 Manual Reset Cover with Lever Reset for body A and B

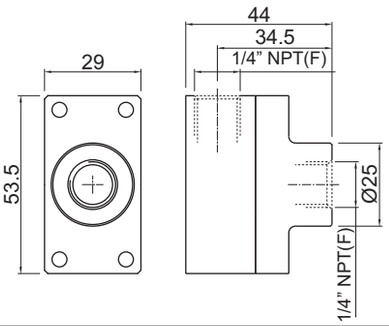

18 Manual Reset Air Cover with Reset for body C, D, E and F

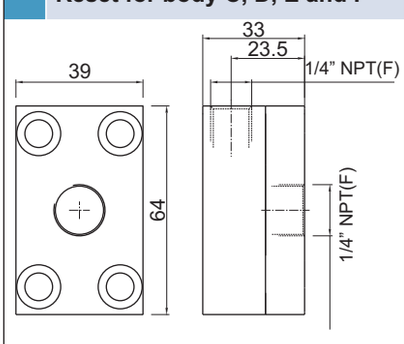

19 Manual Reset Cover for body C, D, E and F

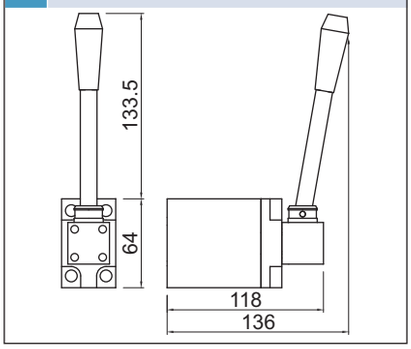

*Valve having Aluminium hard anodized body may have minor leakage across port
Valve body material is normally from Stainless Steel

ROTEX
Engineering For The Future

GAS OVER OIL CONTROL CABINET VALVE

VALVE CODE

a

TYPE	
3/2 SPOOL VALVE	GDAF
5/2 SPOOL VALVE	GVAF

b

PRESSURE	
0 - 16 bar	7
0 - 350 bar	8
0 - 150 bar	9

c

PORT CONNECTION NPT(F)	
1/4”	2
1/2”	4

d

OPERATION	RETURN	CODE
HAND	HAND	04
HAND	SPRING	05
AIR	SPRING	10
AIR	AIR	11
AIR	SPRING (LOW PRESSURE)	32
HAND	HAND (CENTER OFF)	56
SOLENOID	SOLENOID	13

e

MANUAL OPERATOR	
NIL	※
HANDLE/ KNOB OPERATED	M1
HANDLE/ KNOB OPERATED WITH	M2
LOCKING ARRANGEMENT	
MANUAL RESET HANDLE	MR

f

ORIFICE-PORT CONNECTION
6.7 - 2R
10 - 4R

g

BODY	
ALUMINIUM	※
SS 316L	B9

h

SEAL	
NBR	※
PTFE+NBR	S9
Viton GLT	S2G
PTFE+Viton GLT	S21

※ Do not specify when opted for

ORDERING EXAMPLE

GDAF 9 2 10 M1 – 6.7 – 2R – B9 – S21

- 3/2 SPOOL VALVE
- PRESSURE RANGE : 0 - 150 bar
- PORT CONNECTION : 1/4”NPT(F)
- AIR OPERATED, SPRING RETURN
- HANDLE/ KNOB OPERATED
- ORIFICE
- PORT CONN. : 1/4"NPT(F)
- BODY : SS316L
- SEAL : PTFE+Viton GLT

GVAF 7 2 10 MR – 10 – 4R – B9 – S2G

- 5/2 SPOOL VALVE
- PRESSURE RANGE : 0 - 16 bar
- PORT CONNECTION : 1/4”NPT(F)
- AIR OPERATED, SPRING RETURN
- MANUAL RESET VALVE TYPE
- ORIFICE
- PORT CONN. : 1/2"NPT(F)
- BODY : SS316L
- SEAL : Viton GLT

⚠ GDAF, GVAF for 0 - 16 bar Aluminium hard anodized body may have minor leakage across port

Specifications are subject to change without notice

INTRODUCTION : SOLENOID VALVE

Solenoid valve is an electro-mechanical device used for Fluid Control application.
Using the Electro magnetic force (generated due to the passage of Electric current in the coil), it converts the Electrical energy into a mechanical movement of the Plunger and closing, opening of the valve seat (part of the plunger). The resulting action starts or stops the flow.
The solenoid valve in most cases is either ON or OFF, there by creating two states or positions as more commonly referred to. As is evident from the construction, pressure plays an important part in the valve operation.
All ROTEX solenoid valves are of pack less construction and have zero leak characteristics due to the soft elastomer sealing.
Based on their operating principle, the valves are classified as direct acting and internal/ external pilot operated Valve.

DIRECT ACTING

These are the most basic variation in the ROTEX Solenoid Valve program.
Since the solenoid is directly responsible for the operation of these Valves, they are called Direct acting. Refer the diagram.
In the de-energized condition Plunger seat is resting on the Orifice. There by blocking the flow.
On energization, the current flowing generates a magnetic field that couples with the Core and the plunger. This creates sufficient force to overcome all resistance and lifts the plunger. This action opens the blocked orifice and thus allows the flow to start. On switching OFF the current to the Solenoid, the current level drops below the holding level. Spring pulls down the plunger and plunger seat blocks the orifice, blocking the flow. Direct acting solenoid Valves are available in two basic varieties, 2 port valve and 3 port Valve. Based on the Flow connection in the de-energized and energized condition of the Solenoid, these are further classified as Normally Closed, Normally Open or Universal.

2 PORT VALVE

Solenoid valves with 2 ports
Ports: Inlet and outlet.
Normally Closed:
Port 2 (Inlet) and port 1 (outlet) are disconnected in the de-energized condition. On energization, the ports are connected.

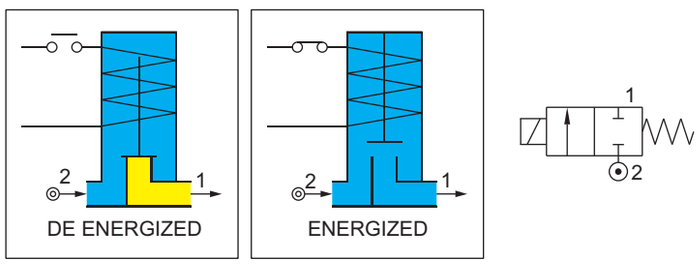

Normally Open:
Port 3 (Inlet) and Port 2 (Outlet) are connected in the de-energized condition. On energization, the ports are disconnected.

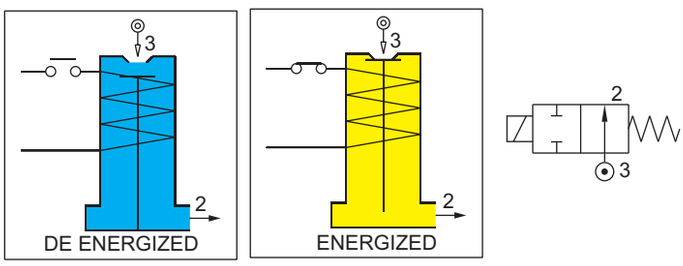

All ROTEX 2 Port Valves are positively sealed with the operating pressure. This ensures that the Valves are tight shut even against pressure surges.
In general the 2 port Valves are uni-directional, thus holding pressure in the flow direction only.
However ROTEX also has a range of bi-directional shut off Valve for special application.

INTRODUCTION : SOLENOID VALVE

3 PORT VALVE

Solenoid valve with 3 ports, are configured depending on the operation.

Normally Closed:
This configuration is most commonly used for the operation of single acting/ spring return device. In de-energized condition, port 1 (inlet) is disconnected from port 2 (outlet connected to apparatus) port-2 is connected to port 3 (exhaust/ vent). On energizing the solenoid the plunger lifts and closes the port 3. Port 1 is connected to port 2.

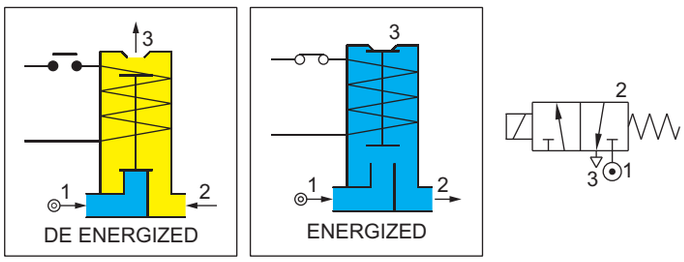

Normally Open:
In the de-energized condition the port 3 (inlet) is connected to port 2 (outlet, connected to apparatus). Port 1 (vent) is blocked by the plunger. On energization, plunger blocks the Port 3. The port 2 is connected to port 1.

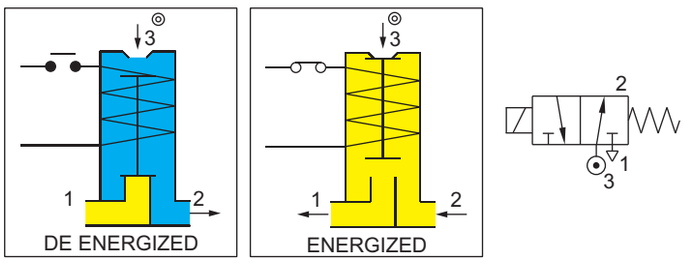

Both these versions use different plunger and consequently can not be reconfigured by merely changing the port connections.

Universal :
This version is basically derived from the above two as a combination, allowing user to connect the valve in various configurations like:
Normally closed, **Normally open**, as described above can also be used for mixing, diverting of the fluid.

Mixing: Inlet at Port 1 and Port 3 are alternately connected to port 2 when The solenoid is energized/ de-energized.

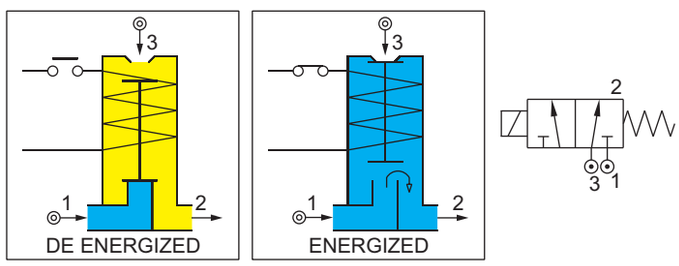

Diverting: Inlet at Port 2 is alternately connected to Port 1 or Port 3 depending on the energization/ de-energization of the solenoid.

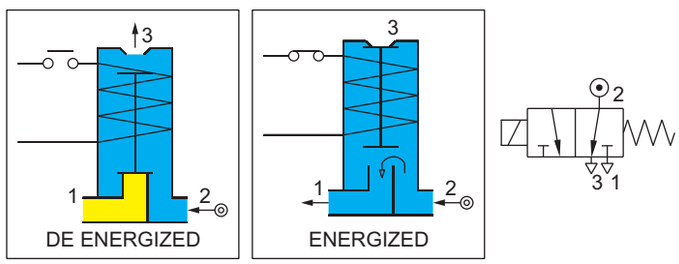

This Valve can also be used as 2 Port bidirectional Normally Closed by plugging port 3 and as 2 Port bidirectional Normally Open by plugging port 1.
The universal Valve uses a special plunger and can not be directly converted at user end from a pre ordered Normally Closed / Open Valve to Universal without affecting the operating pressure rating and change of plunger assembly
Variations to the above Valve construction are family of ROTEX Valves using pressure balanced plunger technology. This greatly negates the effect of pressure in the Valve operation. This allows for better pressure holding and flow characteristics in the Direct acting range of solenoid Valve.

INTRODUCTION : SOLENOID VALVE

PILOT OPERATED

For application where sufficient media pressure is not available or requires a combination of high flow capacity and pressure rating, the media pressure / external pilot pressure is used to operate the Valve. This group of valves uses a differential area principle (for both Poppet and Diaphragm construction), utilizing the media pressure or external pressure to operate the main valve.
All of ROTEX Pilot operated Solenoid Valves are pressure assisted positively sealed, there by sealing the Valve against pressure surges. Integral Direct acting solenoid Valve acts as a Pilot valve controlling the application of the media pressure/ release of the media pressure from the operating area of the main valve and hence the name Pilot operated solenoid Valve.
Internal Pilot operated solenoid Valve uses the media pressure itself to operate the Valve.
External Pilot operated solenoid Valve uses an external pressure source for Valve operation. The applications where media pressure is insufficient or media is unsuitable for the pilot solenoid Valve operation.

Based on the number of ports, the Valves are classified as:

2 PORT NORMALLY CLOSED DIAPHRAGM VALVE

In de-energized state, the media pressure connected to Port 2 (inlet) acts under the diaphragm and through the Bleed orifice, acts on top of the diaphragm. Since the diaphragm area is larger above, It maintains the valve closed disconnecting port 1 (outlet) from supply inlet media pressure. Same pressure also acts in the pilot solenoid over the main Pilot orifice.
On energizing the solenoid, the pressure above of diaphragm is released through the Pilot orifice (which is larger than the bleed orifice), thus lifting the diaphragm with the help of the media pressure under the diaphragm.

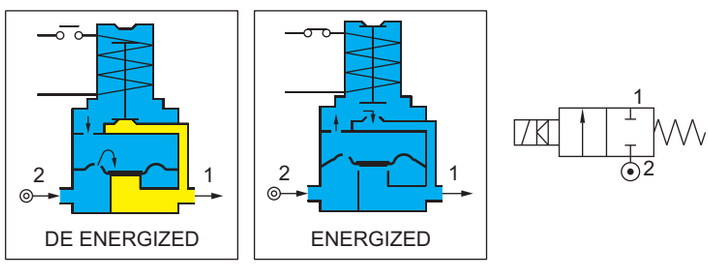

The Pilot chamber pressure is released into the downstream of the valve near the outlet port. With the solenoid de-energized, the Pilot orifice is blocked by the plunger. The media pressure now builds up on top of the diaphragm. With the help of inherent material stiffness, the diaphragm returns to the de-energized state, ensuring tight shut off.

2 PORT NORMALLY OPEN DIAPHRAGM VALVE

In the de-energized state, the media pressure connected to Port 2(inlet) lifts the diaphragm as the pilot orifice is open to the downstream, there by not allowing required pressure build up above the diaphragm, thus maintaining flow to Port 1(outlet).
On energizing the solenoid, plunger blocks the pilot orifice there by allowing build up of pressure above the diaphragm, which is then closed by the inherent material stiffness of the diaphragm, stopping the flow.
On de-energizing the solenoid, the pilot orifice opens and vents the pressure from the pilot chamber to the downstream, there by lifting the diaphragm with the media pressure below.

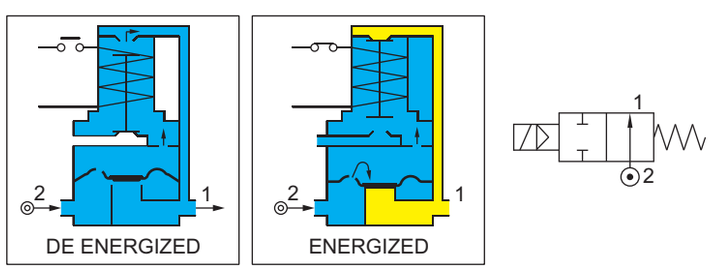

ROTEX
Engineering For The Future

INTRODUCTION : SOLENOID VALVE

2 PORT NORMALLY CLOSED POPPET VALVE

In de-energized state, the media pressure connected to Port 2 (inlet) acts under the Poppet and through the Bleed orifice in the piston, acts on top of the Poppet. Since the above Poppet area (piston seal area) is larger then the seat area, it maintains the valve closed disconnecting port 1 (outlet) from supply. Same pressure also acts in the pilot solenoid over the main Pilot orifice.
On energizing the solenoid, the pressure from the top of Poppet is released through the Pilot orifice (which is larger than the bleed orifice), thus lifting the Poppet with the help of the media pressure below. The Pilot chamber pressure is released into the downstream of the valve near the outlet port. Port 2 is connected to Port 1.
With the solenoid de-energized, the Pilot orifice is blocked by the plunger. The media pressure now builds up on top of the Poppet. With the help of the main Valve spring, the Poppet returns to the de-energized state, ensuring tight shut off.
It is important to note that, if the differential pressure across the Valve falls below the minimum required level, the Valve will start to close / completely close even if the solenoid is energized continuously. For certain applications, ROTEX offers a special execution to overcome such conditions. Please contact ROTEX local office for more details.

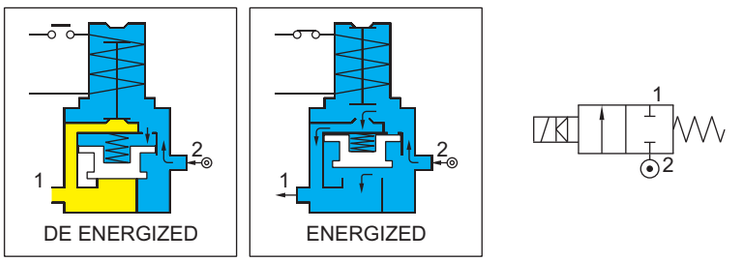

2 PORT NORMALLY OPEN POPPET VALVE

In the de-energized state, the media pressure connected to Port 2(inlet) lifts the Poppet as the pilot orifice is open to the downstream, there by not allowing required pressure build up above the poppet. This maintains the flow to Port 1(outlet).
On energizing the solenoid, plunger blocks the pilot orifice there by allowing build up of pressure above the Poppet, which is then closed by the main Valve spring above the Poppet. This stops the flow.
On de-energizing the solenoid,the pilot orifice opens and vents the pressure from the pilot chamber to the downstream, thereby lifting the Poppet with the media pressure below. Similar to Normally Closed version, when differential pressure dropsbelow the minimum required, the valve will get closed in the de-energized state even though the solenoid is OFF. For certainapplications,ROTEX offers a special execution to overcome such conditions.
Please contact ROTEX local office for more details.

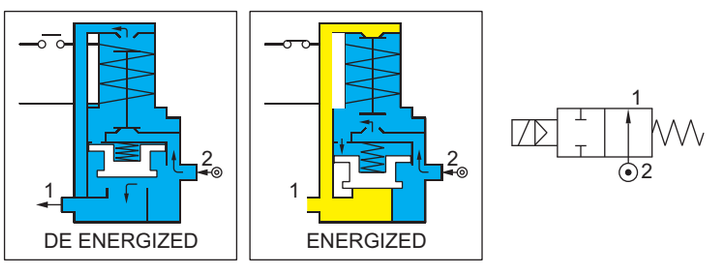

2 PORT EXTERNAL PILOT OPERATED POPPET VALVE

In case of application where media pressure is below the minimum required or when the media is aggressive, external pilot Valve is used. External pressure media is connected to Port 7, which directly acts on the Poppet keeping it closed. On energizing the solenoid, the Pilot orifice is blocked, blocking the external pressure to the Pilot chamber. The media pressure under the Poppet helps to open the valve. For application where media pressure is below the required operating pressure, an extra assistance is provided in the form of a spring to push the Poppet up.
The external pressure has to be minimum 3 bar or greater than the media pressure, which ever is higher.

2 Port External Pilot operated Normally Closed Valve, Pilot air failure to open

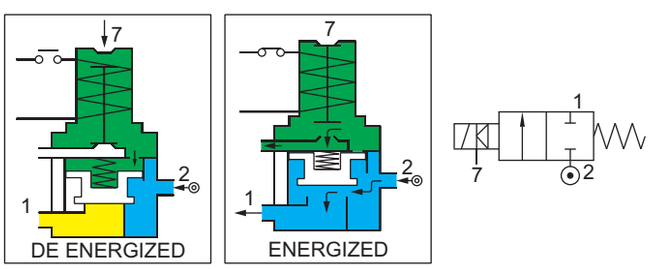

2 Port External Pilot operated Normally Open Valve

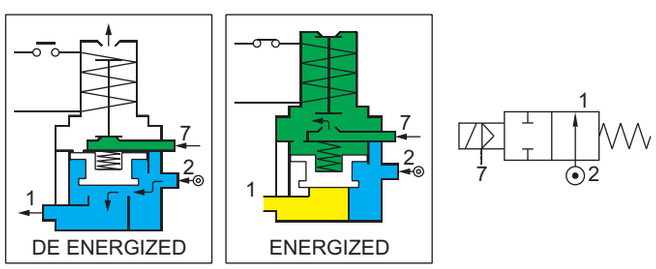

Specifications are subject to change without notice

INTRODUCTION : SOLENOID VALVE

3 PORT POPPET TYPE INTERNAL PILOT OPERATED NC SOLENOID VALVE

Inlet Pressure is connected to Port 1 (inlet) and blocked by the bottom valve seat assisted with spring. Port 2 (outlet) and Port 3 (vent) are connected. A pilot line is drawn from the inlet chamber to the Pilot solenoid valve and is blocked at the Pilot orifice by the Plunger.
On energizing the solenoid, the Pilot pressure is directed to the Pilot chamber, there by applying the pressure to the top of the Poppet.

The Piston seal area being larger than the Seat area at the bottom, the resultant force moves the Poppet assembly down. Port 3 is blocked as a result and Port 1 and 2 are connected.
On de-energizing the solenoid, Plunger blocks the Pilot orifice and opens the Pilot chamber to the Pilot vent. Release of pressure, forces the Poppet assembly up with the pressure acting at Port 3 and the spring together, eventually blocking Port 1 and connecting Port 2 to Port 3.

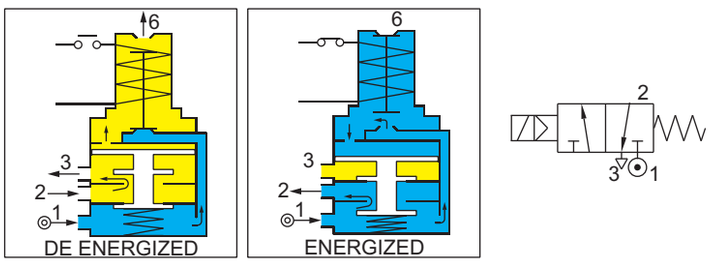

3 PORT POPPET TYPE INTERNAL PILOT OPERATED NO SOLENOID VALVE

Inlet Pressure is connected to Port 3 (inlet). Port 2 (outlet) and Port 3 are connected. A pilot line is drawn from the inlet chamber to the Pilot solenoid Valve and is blocked at the Pilot orifice by the Plunger. Port 1 is blocked at the bottom Valve seat by media pressure and assisted with Valve spring.
On energizing the solenoid, the Pilot pressure is directed to the Pilot chamber, there by applying the pressure to the top of the Poppet.

The Piston seal area being larger than the Seat area at the bottom, the resultant force moves the Poppet assembly down. Port 3 is blocked as a result and Port 1 and 2 are connected.
On de-energizing the solenoid, Plunger blocks the Pilot orifice and opens the Pilot chamber to the Pilot vent. Release of pressure, forces the Poppet assembly up with the pressure acting at Port 3 and the spring together, eventually blocking
Port 1 and connecting Port 2 to Port 3.

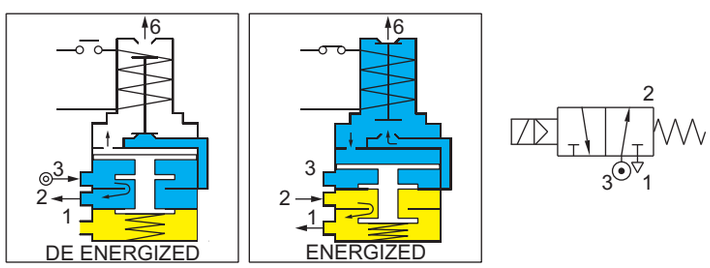

3 PORT POPPET TYPE EXTERNAL PILOT OPERATED SOLENOID VALVE

Inlet Pressure is connected to Port 1 (inlet) and blocked by the bottom valve seat assisted with spring. Port 2 (outlet) and Port 3 (vent) are connected. A pilot pressure line (min. 3 bar greater or equal to main line pressure) is connected to Port 7 (Pilot port) of Pilot solenoid Valve and is blocked at the Pilot orifice by the Plunger.
On energizing the solenoid, the Pilot pressure is directed to the Pilot chamber, there by applying the pressure to the top of the Poppet. The Piston seal area being larger than the Seat area at the bottom, the resultant force moves the Poppet assembly down. Port 3 is blocked as a result and Port 1 and 2 are connected.

On de-energizing the solenoid, Plunger blocks the Pilot orifice and opens the Pilot chamber to the Pilot vent. Release of pressure, forces the Poppet assembly up with the pressures acting at Port 3 and the spring together, eventually blocking Port 1 and connecting Port 2 to Port 3.
With this version, the Valve can be configured to work in either Normally Closed or Normally Open, Mixing or Diverting mode thus making it a Universal valve.

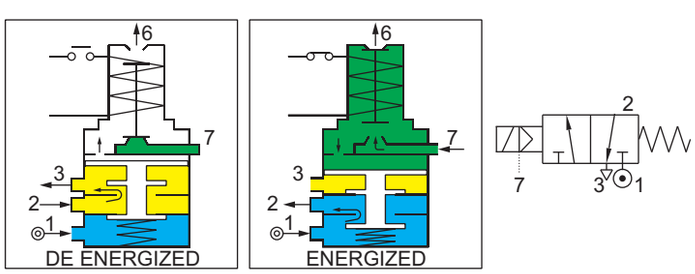

Specifications are subject to change without notice

INTRODUCTION : SOLENOID VALVE

5 PORT POPPET TYPE SINGLE SOLENOID VALVE

Inlet Pressure is connected to Port 1 (inlet). Through an internal passage the inlet is connected to the Port 4 (which acts as a Normally open port). Inlet is blocked at the bottom valve seat assisted with spring. Port 2 (Normally closed outlet) and Port 3 (vent) are connected. A pilot line is drawn from the inlet chamber to the Pilot solenoid valve and is blocked at the Pilot orifice by the Plunger. On energizing the solenoid, the Pilot pressure is directed to the Pilot chamber, there by applying the pressure to the top of both the Poppets. The Piston seal area being larger than the Seat area at the bottom, the resultant force moves the Poppet assemblies down.

Port 3 is blocked as a result and Port 1 and 2 are connected the same time Port 4 and Port 5 are connected.

On de-energizing the solenoid, Plunger blocks the Pilot orifice and opens the Pilot chamber to the Pilot vent. Release of pressure, forces the Poppet assemblies up with the pressure and the spring together, eventually blocking Port 1 and connecting Port 2 to Port 3 and connecting Port 1 with Port 4 and blocking Port 5.

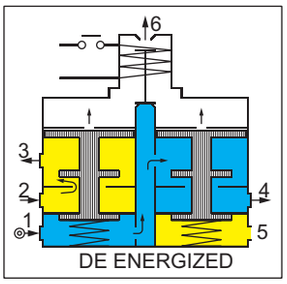

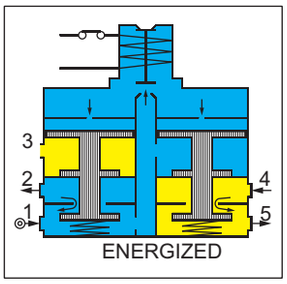

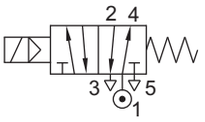

5 PORT POPET TYPE EXTERNAL PILOT OPERATED SINGLE SOLENOID VALVE

Inlet Pressure is connected to Port 1 (inlet). Through an internal passage the inlet is connected to the Port 4 (which acts as a Normally open port). Inlet is blocked at the bottom valve seat assisted with spring. Port 2 (Normally closed outlet) and Port 3 (vent) are connected. A pilot pressure line (min. 3 bar or equal or greater than main line pressure) is connected to Port 7 (Pilot port) of Pilot solenoid Valve and is blocked at the Pilot orifice by the Plunger. On energizing the solenoid, the Pilot pressure is directed to the Pilot chamber, there by applying the pressure to the top of both the Poppets.

The Piston seal area being larger than the Seat area at the bottom, the resultant force moves the Poppet assemblies down. Port 4 is blocked as a result and Port 1 and 2 are connected and at the same time Port 4 and Port 5 are connected. On de-energizing the solenoid, Plunger blocks the Pilot orifice and opens the Pilot chamber to the Pilot vent. Release of pressure, forces the Poppet assemblies up with the pressure and the spring together, eventually blocking Port 1 and connecting Port 2 to Port 3 and connect Port 1 with Port 4 and blocking Port 5.

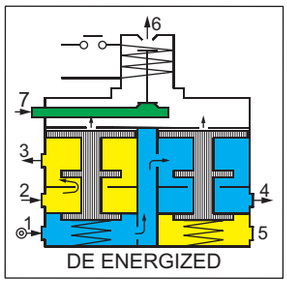

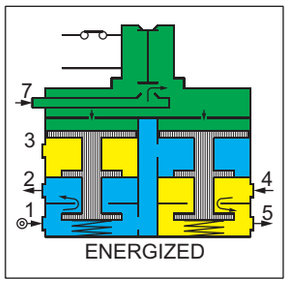

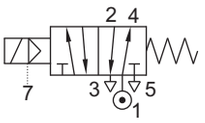

5 PORT POPPET TYPE DOUBLE SOLENOID VALVE

Inlet Pressure is connected to Port 1 (inlet). Through an internal passage the inlet is connected to the Port 4 (which acts as a Normally open port). Inlet is blocked at the bottom Valve seat assisted with spring. Port 2 (Normally closed outlet) and Port 3 (vent) are connected. A pilot line is drawn from the inlet chamber to the Pilot solenoid valve and is blocked at the Pilot orifice by the Plunger.

On energizing the Latch solenoid(M1), the Pilot pressure is directed to the Pilot chamber, there by applying the pressure to the top of both the Poppets. The Piston seal area being larger than the Seat area at the bottom, the resultant force moves the Poppet assemblies down. Port 3 is blocked as a result and Port 1 and 2 are connected and at the same time Port 4 and Port 5 are connected. After energization of the Valve, the bleed orifice connected to the Port 2 latches the Poppets. This allows the Latching solenoid to be switched off (impulse operation).

On energizing the De-latching solenoid(M2), Plunger opens the Vent orifice and releases the Pilot pressure from the Pilot chamber to Pilot vent port 6. Release of pressure, forces the Poppet assemblies up with the pressure and the spring together, eventually blocking Port 1 and connecting Port 2 to Port 3 and connecting Port 1 with Port 4 and blocking Port 5 and Since this valve is pneumatically latched, the Loss of Air pressure will cause the Valve to reset.

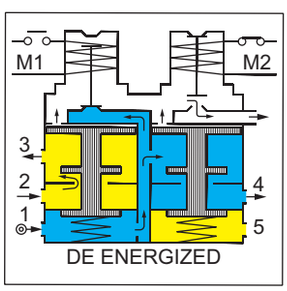

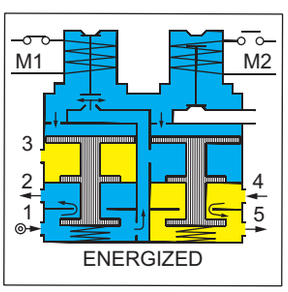

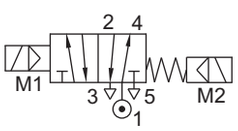

INTRODUCTION : SOLENOID VALVE

5 PORT INLINE POPPET INTERNAL PILOT OPERATED SOLENOID VALVE

Inlet pressure is connected to the Port 1(inlet). Port 1 is connected to Port 4 (Normally open outlet) with the Port 5 (vent) blocked by the Poppet seat. Port 2 (Normally closed outlet) is connected to Port 3 (vent). Inlet air is connected to the bottom of the Poppet and acts on the bottom piston which works as a return spring keeping the Poppet assembly up.
On energization, inlet air is drawn from the Pilot line and connected to the Top piston chamber. Since the Top piston is larger than the bottom piston, resultant force moves the entire Poppet assembly down.

With the inlet seal crossing over the port, port 1 which is disconnected from port 4 and is connected to port 2. The Poppet seat closes Port 3 and opens Port 4. On de-energization the force from the bottom piston pushes the Poppet assembly up to its original condition. Breather port is provided to vent the air under the top piston. This hole should not be plugged.

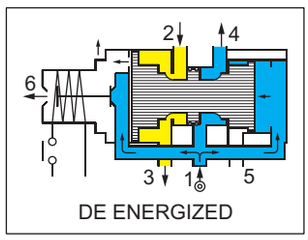

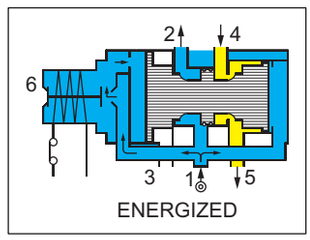

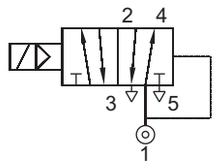

5 PORT INLINE POPPET DOUBLE SOLENOID VALVE

Inlet pressure is connected to the Port 1(inlet). Port 1 is connected to Port 4 (Normally open outlet) with the Port 5 (vent) blocked by the Poppet seat. Port 2 (Normally closed outlet) is connected to Port 3 (vent).
On energization of the latching solenoid(M1), inlet air is drawn from the Pilot line and connected to the Top piston chamber. The resultant force moves the entire Poppet assembly. With the inlet seal crossing over the port, port 1 is disconnected from port 4 and is connected to port 2. The Poppet seat closes Port 3 and opens Port 5.
De-energizing the latch solenoid does not change the valve position. To reset the Valve to original state, de latching solenoid (M2), is energized. Inlet air is connected to the bottom piston. The force from the bottom piston pushes the Poppet assembly up to its original condition. Breather port is provided to vent the air under the top piston. This hole should not be plugged.

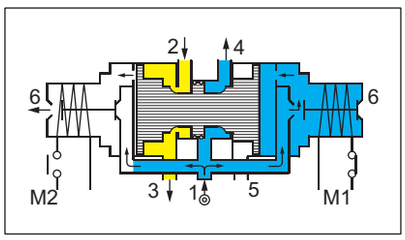

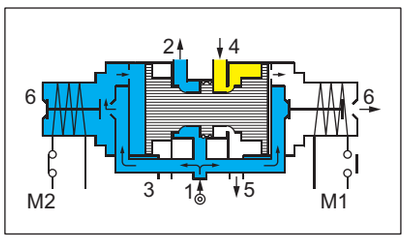

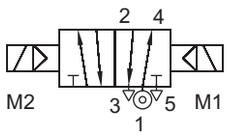

Specifications are subject to change without notice

DEFINITION

Solenoid Enclosure

Metal housing around the coil for electrical and mechanical protection. It also gives protection against environmental hazards.

Maximum Operating Pressure Differential

This refers to the difference in pressure between inlet and the outlet. If the pressure at the outlet is not known, conservative approach suggests to treat inlet pressure as maximum operating pressure differential.

Minimum Operating Pressure Differential

This is the pressure that is required to open the Valve and keep it open. For 3 ports and 5 ports pilot Valves, the minimum operating pressure is measured between the inlet pressure and exhaust ports and must be maintained through out the operation cycle for smooth operation of the Valve. At minimum operating pressure differential, Rotex Valve have 80 % of the flow factor.

Proof Pressure

It is the pressure which Valve can withstand before bursting/ causing permanent physical deformation.

Maximum Ambient Temperature

Maximum ambient temperature determines safe working limit for coil insulation in energized condition , with maximum fluid temperature in the existing Valves.

Response Time

It measures the time lapse after energizing or de energizing a solenoid Valve until the outlet pressure reaches a specific percentage of its maximum steady value, the outlet being connected to a circuit having specified flow parameters . Response time depends on mainly five factors like electrical supply, type of the Valve ie. direct or pilot operated, fluid handled, size of the moving parts of the main Valve mechanism, circuit in which the time is measured.

Response ON

Time taken for the pressure at the outlet port to reach 80% of the inlet pressure, from the moment electrical supply to the solenoid is applied.

Response OFF

Time taken for the Valve to exhaust (pressure shall be 20% of the inlet pressure at its outlet port) from the moment supply to the solenoid is cut off.

The response time of Rotex valve , under average condition is ;

	Response ON		Response OFF	
• Small direct acting Valve	6 - 8	ms	8 - 10	ms
• Large direct acting Valve	6 - 10	ms	10 - 15	ms
• Diaphragm Valve ≤25 mm	300	ms	800	ms
• Diaphragm Valve ≥25 mm	600	ms	1800	ms
• 3/2, 5/2 Pilot operated Valve	15-50	ms	25-90	ms

Specifications are subject to change without notice

DEFINITION

Solenoid

It is an electrical part of a Valve which includes a bobbin wound with insulated copper wire, magnetic core, enclosure. This creates a magnetic flux when energized.

Inrush current

When solenoid is energized with AC supply, the plunger moves and creates a momentary surge of current , known as inrush current. Inrush current is observed in AC circuit and not in DC circuit.

Holding current

For AC supply Solenoid, Once plunger completes the travel and rest in a position, current drawn by Solenoid is known as holding current.

Insulation class

The selection of insulation is a function of ambient temperature and the internal temperature rise of the solenoid. The temperature limit for class F insulation is 155 °C and for class H insulation, is 180 °C. Rotex solenoid Valve is fitted with class F insulation and class H is available as an option.

Temperature class

This is the highest temperature any part or the entire surface of an electrical device can reach under the most unfavorable operating conditions, capable of igniting a surrounding explosive atmosphere.

Pick up voltage

Is a minimum voltage at which the Valve operates at minimum/ maximum operating pressure.

Drop down voltage

Is minimum voltage at which Valve does not remain actuated once energized

Temperature rise

It is a maximum temperature that the solenoid attains when the same is kept energized continuously.

Leakage port

When the unneeded fluid passing out from the out let port/ s or exhaust ports of the valve at energized/ de energized condition of the Valve

Leakage joint

Is the fluid coming out from various joints of the valve assembly

TB

It is a weather proof Terminal Box solenoid having IP67 protection and integrated junction box for terminating cable.

FPJB

It is a Flame Proof solenoid suitable for hazardous locations having integrated Junction Box for termination of cable.

CONTINUOUS DUTY RATED SOLENOID

The solenoid when capable of operating continuously at higher rated voltage without affecting any of its parameter is know as continuously rated solenoid.

ROTEX
Engineering For The Future

IDENTIFICATION

Valve label

Label on the ROTEX Solenoid Valve shows the following details.

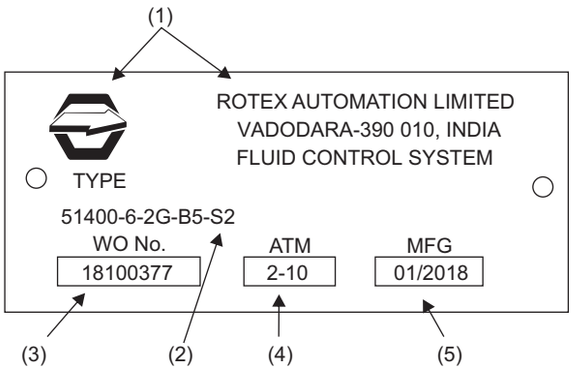

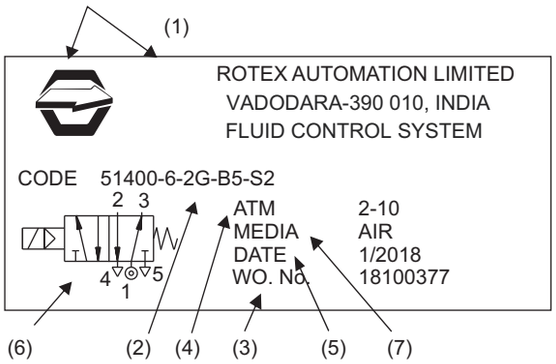

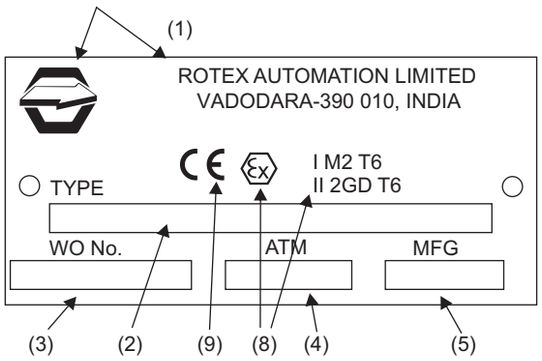

(1) Logo + Manufacture's Name and address
(2) Valve Type / Code

51400	=	Valve Model
Suffix	=	Nil
6	=	Orifice
2G	=	1/4" / BSP Port Connection
B5	=	Body Material (SS 316)
S2	=	Manual Override (Push and Turn)
	=	Seal Material (Viton)
110 V	=	Solenoid Voltage
50 Hz	=	Current (AC)
22	=	Solenoid Construction (Enclosure Plug in)
H	=	Solenoid Class H Insulation

(3) ROTEX Work Order reference/ Sr. No of the valve
(4) Operating Pressure
(5) Month and Year of Manufacture
(6) Valve Symbol
(7) Media
(8) ATEX Ex. GOST mark for Valve (Non Electrical Part)
(9) CE mark for ATEX and/ or PED compliance

Solenoid label

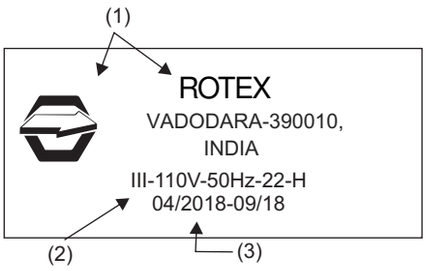

(1) Logo + Manufacture's Name and address
(2) Solenoid Type

III	=	Solenoid Size III
110 V	=	Solenoid Voltage
50 Hz	=	Solenoid Current
22	=	Solenoid Construction (Plug in DIN)
H	=	Solenoid Class H Insulation

(3) ROTEX Plan No. and Month/Year of Manufacture
(4) Also refer to bottom of the solenoid for voltage, current and other marking

Cable Entry

A solenoid with NPT (F) threading is marked “N” near the Cable entry and with Metric thread is marked “M”. There is no marking for Solenoid having Cable entry with 3/4” ET.

NOTE : The product without label is out of warranty.

IDENTIFICATION

SOLENOID

While ordering spare solenoid, please refer to label fixed on the solenoid as well as details punched/ marked at its bottom



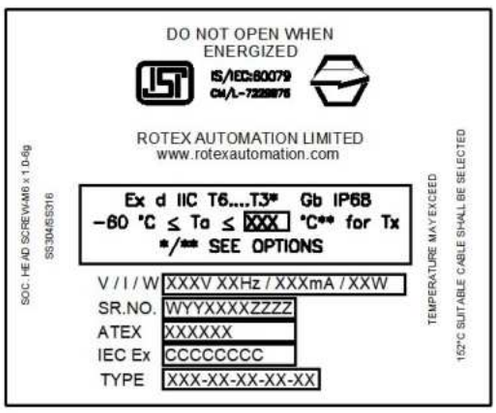

VALVE

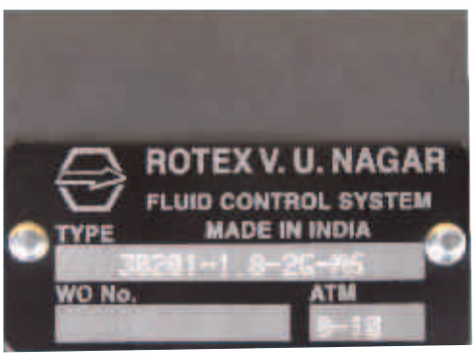

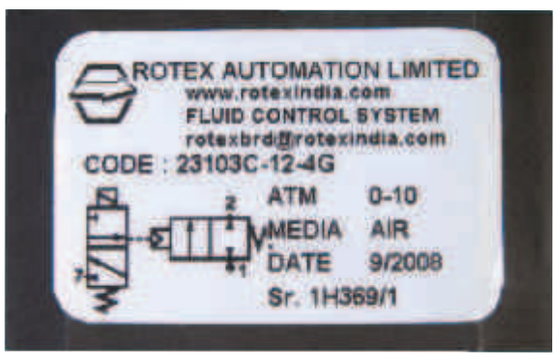

- Provide all details punched on the label fixed on the valve body
- Mention body material and details about port, manual override incase if ROTEX Solenoid Valve is manufactured earlier than 1997
- The lable have e-mail and web site identification

PORT

Marking for Port connection →

MARKING	PORT CONNECTION
NIL	BSP
N	NPT
M	METRIC
C	BSP, NPT COMBINED

e.g. Valve body having NPT Port connections have N engraved above port.



ROTEX
Engineering For The Future

FLUID COMPATIBILITY

	SEAT SEAL								BODY AND INTERNAL MATERIAL			
MEDIA	NBR	EPDM	Vition	NEOPRENE	PTFE	HYTREL	FLOROSILICONE	Vition	AL.	BR	SS 316	SS 316L
ACETIC ACID 5%	B	A	B	A	A	A	B	A			A	A
ACETONE		A			A	B	C	A	A	A	A	A
ACYTYLENE	A	A	A		A	A	X	A			A	A
AIR (UP TO 70°C)	A	A	A	A	A	A	A	A	A	A	A	A
AIR (70 C - 90°C)		A	A		A	A	A	A	A	A	A	A
AIR (90 C - 130°C)		A	A		A	C	B	A	A	A	A	A
AIR (130 C - 200°C)			A		A	C	C	A				
AMMONIA + OIL		B		B	A				A		A	A
AMMONIA ANHYDROUS	B	A		A	A	T	C		A		A	A
AMMONIA GAS (HOT)		B		B	A		C		A		A	A
AMMONIA GAS (COLD)	A	A		A	A		C		A		A	A
ARGON	A	A	A		A		A	A	A	A	A	A
BIOGAS	A				A				A			
BUTANE LIQUID	A		A	A	A	A	A	A	A	A	A	A
CAKEOVEN GAS			A		A		B	A			A	A
CARBON MONOXIDE	A	A	A	B	A	A	B	A	A	A	A	A
CHILLED WATER	A	A	A		A				A	A	A	A
CNG	A		A	A	A	B			A	A	A	A
Co2 DRY			A		A	A	A			A		
Co2 GAS	A	B	A	B	A	A	A		A	A	A	A
Co2 LIQUID	A				A	A	A		A	A	A	A
CONDASTE+VAPOUR	A				A				A			
CONDENSATE	A	A			A					A	A	A
CRACKED AMMONIA	A				A				A			
DIESEL			A		A		A	A	A	A	A	A
DM WATER (UP TO 65°C)	A	A	A	A	A			A	B	B	A	A
DM WATER (65°C - 90°C)	A	A	A	A	A				B	B	A	A
ETHYL ALCOHOL	A	A			A			A	B	A	A	A
FREON 114	A	A	B	A	A	A		B		A	A	A
FREON 115	A	A	B	A	A			B				
FREON 13	A	A	A	A	A			A	A	A	A	A
FREON 134	A				A				A	A	A	A
FREON 22		A		A	A				A	A	A	A
FREON 31		A		B	A							
FREON 32	A	A		A	A							
FUEL GAS (UP TO 80°C)	A	A			A				A		A	A
H_2S		A	A		A	A	A				A	A
HALON GAS			A		A			A	A			
HCL (COLD)		A	A		A	C	X	A			A	A
HCL (HOT)			B		A	C	B	B			B	B

A - Compatible
B - Can get affected
Marking where not shown is not suited/ Contact ROTEX

Specifications are subject to change without notice

FLUID COMPATIBILITY

	SEAT SEAL								BODY AND INTERNAL MATERIAL			
MEDIA	NBR	EPDM	Vition	NEOPRENE	PTFE	HYTREL	FLOROSILICONE	Vition	AL.	BR	SS 316	SS 316L
HEAVY WATER	A	A	A					A			A	A
HELIUM	A	A	A	A	A		A	A	A	A	A	A
HYDRAULIC OIL	A		A	B	A		A	A	A	A	A	A
HYDROCARBON GAS			A		A		A	A			A	A
HYDROGEN	A	A	A	A	A	A	C	A	A	A	A	A
INST.AIR < 80°C												
ISO VG 46 0IL			A		A			A	A			
KEROSENE	A		A	B	A		A	A	A	A	A	A
LIGHT DIESEL OIL	A		A		A			A	A	A	A	A
LIQUID NITROGEN					A						A	
LIQUID PROPANE	A		A		A			A			A	A
LNG	A		A		A			A				
LPG	A		A	B	A		A	A	A	A	A	A
LUB OIL	A		A	B	A		B	A	A	A	A	A
METHANE GAS	A		B	B	A		C	B	A	A	A	A
METHENOL (UP TO 60°C)		A			A						A	A
MS/SKO/HSD/ATF			A		A			A			A	A
NAPTHA	B		A		A	A	B	A	A	A	A	A
NATURAL GAS	A		A	A	A		C	A	A	A	A	A
NITROGEN	A	A	A	A	A		A	A	A	A	A	A
OIL	A		A	B	A		A	A	A	A	A	A
OIL SAE 40			A		A		A	A	A			
OIL-ISOVG220			A		A		A	A	A			
OXYGEN (COLD)	B	A	A	A	A		C	A	B	B	B	B
OXYGEN (90°C - 200°C)			B		A		A	B	B	B	B	B
PETROL	B		A		A	B(55D) A(72D)	A	A	A	A	A	A
PROPANE GAS	A		A	B	A		B	A	A	A	A	A
STEAM (UP TO 120°C)					A	C	C		A	A	A	A
STEAM (120°C - 150°C)					A	B	C		A	A	A	A
SULFURIC ACID (CONC)			B		A	C		B			B	B
SULFURIC ACID (DILUTE)		B	A	B	A	A		A			B	B
TOLUENE			A		A	B(40, 55D) A(72D)		A	A	A	A	A
TRANSFORMER OIL	A		A	B	A			A	A		A	A
TURBINE OIL	B		A		A			A			A	A
WATER (UP TO 65°C)	A	A	A	A	A	A		A	B	A	A	A
WATER (65 C - 90°C)	A	A	A	A	A	B		A	B	A	A	A
PROCESS WATER	A	A	A	A	A			A		A	A	A
SOAP WATER	A	A	A	B	A	A	A	A		A	A	A

A - Compatible
B - Can get affected
Marking where not shown is not suited/ Contact ROTEX

A : Fluid has Little or no effect
B : Fluid has minor to moderate effect
C : Fluid has severe effect
T : No data likely to minor effect
X : NO data likely to have sever effect

INSTALLATION INSTRUCTION

1. Clean through all the Pipes/ Tubes/ Fittings from outside and bore
   For satisfactory functioning of the Valve and for avoiding pressure drop at the inlet port, flow factor of pipe fittings and all other elements connected prior to inlet port of the valve should be equal/ higher than that of the Valve

2. Media pressure should be within operating range of the valve and applied at right port of the Valve

3. To avoid water, any external fluid entering into the termination area of Terminal Box, Flame Proof Solenoid with Junction Box, Intrinsically Safe Solenoid, fix cover and cable gland properly

4. To avoid foreign particles/ dust entering into the Valve fix dust cap/ muffler on exhaust and pilot exhaust port/s of the Valve

5. Avoid direct water/ any fluid splashing on to the solenoid

INSTRUCTIONS FOR TESTING VALVE ON SITE

As a routine, check valve as under

1. Ensure that all exhaust ports are fitted with dust cap/ muffler for preventing dust/ foreign particles entering into the valve

2. Check for leakages at all exhaust ports, during energized as well as in de-energized position of the valve. There should not be continuous leakage of the fluid from any of the exhaust ports as well as from joints

3. The solenoid is not overheating or there are no overheating marks/ overheating foul smell

4. Solenoid cover, cable gland is properly fitted ensuring that any foreign particles/ fluid/ water do not enter into termination Area

TESTING OF THE SOLENOID VALVE AT TEST BENCH

1. Connect air/ media to the inlet port of the valve ensuring that
   A. To avoid pressure drop ID of pipe fittings and all others elements connected prior to inlet port of the Valve have its flow factor equal/ higher than that of Valve
   B. The media pressure is within the pressure range of the valve being tested

2. Outlet port/s should be blocked or connected to equipment

3. Check for the leakage at its exhaust as well as its pilot exhaust port during energized and de-energized condition of the valve at minimum and maximum operating pressure

4. During de-energized condition of the Valve by operating manual override (Where available) at maximum as well as at minimum operating pressure, Check for the leakage at exhaust and pilot port of the Valve

5. Check operation of the valve by applying rated Voltage and current to the solenoid

6. During de-energized condition of the Valve, at minimum as well as maximum operating pressure, check operation of the Valve by operating manual override

7. Resistance measurement : Resistance of the solenoid can be measured for standard solenoid. However for solenoid with built-in rectifier/ surge suppressor/ Intrinsically Safe solenoid/ latch solenoid etc. Resistance of the solenoid can not be measured

8. High Voltage insulation test : Apply 1500 V AC between terminals of the solenoid and housing with limiting current 30 mA for one minute. The solenoid having sound insulation shall not trip the instrument

9. Insulation resistance test : apply to the terminals of the solenoid and the housing 500V DC and check the resistance which should be more than 100 mega Ohms

PED

Pressure Equipment Directive is applicable to any pressurized equipment handling hazardous or non hazardous fluid. This is an enforced law for any equipment intended to be installed in European union

EU directive 97/23 EC module H has been followed

For Solenoid Valves the Pressure Equipment Directive (PED) is applicable as under

PED is not applicable for valve of any orifice when operated for pressure ≤ 0.5bar

Applicability of PED

For the Solenoid Valve to be installed in European Union, refer chart given hereunder :

Orifice in mm	Pressure Rating in kg/cm² for which PED is applicable			
	Non-Hazardous Gas, Orifice >25 PS Dn>1000 PED is applicable	Hazardous Gas Orifice>32 PS Dn≥1000	Non-Hazardous Liquid Orifice>200 PS Dn>5000	Hazardous Liquid Orifice>25 PS Dn>2000
≤25	NA	NA	NA	NA
32	NA	>31.25	NA	>62.5
40	>25	>25	NA	>50
50	>20	>20	NA	>40
65	>15.38	>15.38	NA	>30.76
80	>12.5	>12.5	NA	>25

NA = Non Applicable

REMARKS

1) Solenoid Valve in which media passing through the valve is Gaseous and Orifice is less than 25 mm, PED is not applicable
2) Solenoid Valve in which media passing through the valve is Liquid Hazardous nature, pressure 0.5 bar and Liquid Non-Hazardous nature, pressure below 10 bar, PED is not applicable

Rotex has been assessed by DNV as described in module H in the directive 97/23 EC for 2/2, 3/2, and 5/2 valves having orifice 25 mm, 32 mm, 40 mm, 50 mm and pressure up to 70 bar

NA : NOT APPLICABLE

Specifications are subject to change without notice

ROTEX
Engineering For The Future

EXPLOSION PROOF/ FLAME PROOF

For avoiding, accidental ignition, all the electrical equipment required to be installed in hazardous location need to be protected against the potential hazards due to fire / explosions/ lightening

For explosion / fire to take place mainly three conditions are necessary
1 Presence of oxidization substance (usually oxygen) available in the atmosphere, air

2 Flammable substance in the form of gas or liquid or vapor or dust to a right level of Oxygen

(Too lean or too rich mixture of air/ Oxygen to an flammable substance can not cause ignition even if other two conditions are available)

3 source of ignition in the form of flame/ spark/ heat
Usually heat/ spark/ flame is more possible from an electrical equipment. All electrical equipment required to be installed in a hazardous location is protected

Fire / explosion can be avoided by eliminating any one of the above listed Condition

Internationally there are various methods to prevent fire/ explosion

PROTECTION METHOD	MARKING	ILLUSTRATIVE SYMBOL
PRESSURIZED ENCLOSURE BY ELIMINATING AIR/ OXYGEN	Ex p	
FLAME PROOF ENCLOSURE BY DESIGN	Ex d	
POWDER FILLED ENCLOSURE BY ELIMINATING AIR/ OXYGEN	Ex q	
OIL IMMERSED ENCLOSURE BY ELIMINATING AIR, OXYGEN	Ex o	
INTRINSIC SAFE ENCLOSURE BY CONTROLLING ENERGY OF THE SPARK/ HEAT	Ex i	
INCREASED SAFETY	Ex e	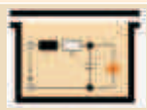
NON SPARKING DESIGN (protection by eliminating spark heat)	Ex n	
ENCAPSULATION BY ELIMINATING AIR/ OXYGEN	Ex m	

Ex d, Ex ia, and Ex m ARE THE PROTECTION METHOD USED BY ROTEX

Specifications are subject to change without notice

EXPLOSION PROOF/ FLAME PROOF

Local law is applicable depending on the country in which the electrical equipment is intended to be installed

COUNTRY/ CONTINENT	SYMBOL	STANDARD	STANDARD
INDIA		INDIAN	IS 2148:2004, IS 5780:2002
			EQUIVALENT TO IEC 60079
EUROPE	CE	ATEX	EN 60079
USA/ CANADA	UL	UL	UL 1209
RUSSIA		GOST	IEC 60079
BRAZIL		INMETRO	IEC 60079

However the most applicable common law in a simple form as per IEC/ standard is explained as under :

The area is divided in to zone based on the possibilities of flammable substances presence

Zone 0 is area where flammable substance is always present
Zone 0 category 1G is area where ignitable concentrations of flammable gases, vapor or liquid is continuously present
Zone 20 category 1D is area where ignitable concentrations of flammable dust is continuously present
Equipment having Ex ia protection (Intrinsically Safe) can only be used for such locations
Zone 1 is area where flammable substance may be present during normal operation or may be present for short duration
Zone 1 category 2G is area where concentration of flammable gases, vapor or liquid may be intermittently present
Zone 21 category 2D is area where flammable dust may be intermittently present
Equipment with Ex ia, Ex ib, Ex d, Ex m, Ex e, Ex o, Ex q, Ex p, protection can be used
Zone 2 is area where flammable substance is not likely to be present during normal operation
Zone 2 category 3G is area where flammable gases, vapor or liquid is not likely to be present during normal operation.
Zone 22 category 3D is area where flammable dust is not likely to be present during normal operation
Equipment with Ex ia, Ex ib, Ex d, Ex m, Ex e, Ex o, Ex q, Ex p, and Ex n protections can be used

ILLUSTRATION TO EXPLAIN ZONE 0, 1, 2, 20, 21 AND 22

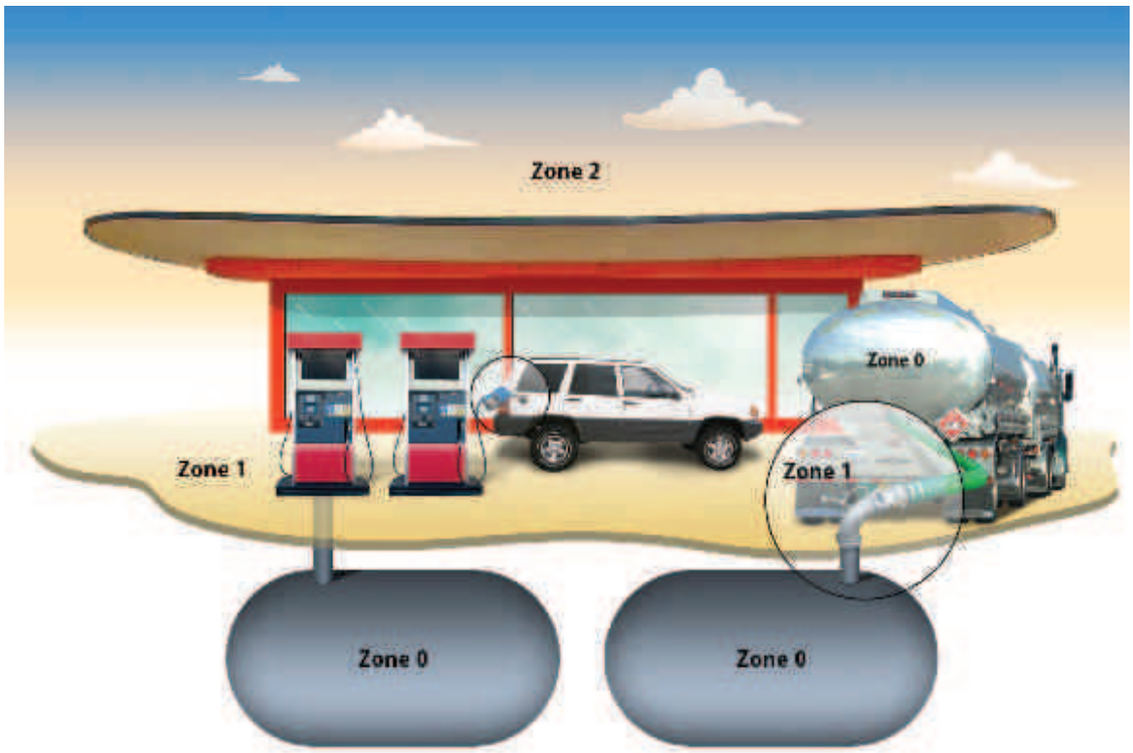

Zone 0,1 and 2 is area for Liquid gas / Vapour

Zone 20,21 and 22 for Dust

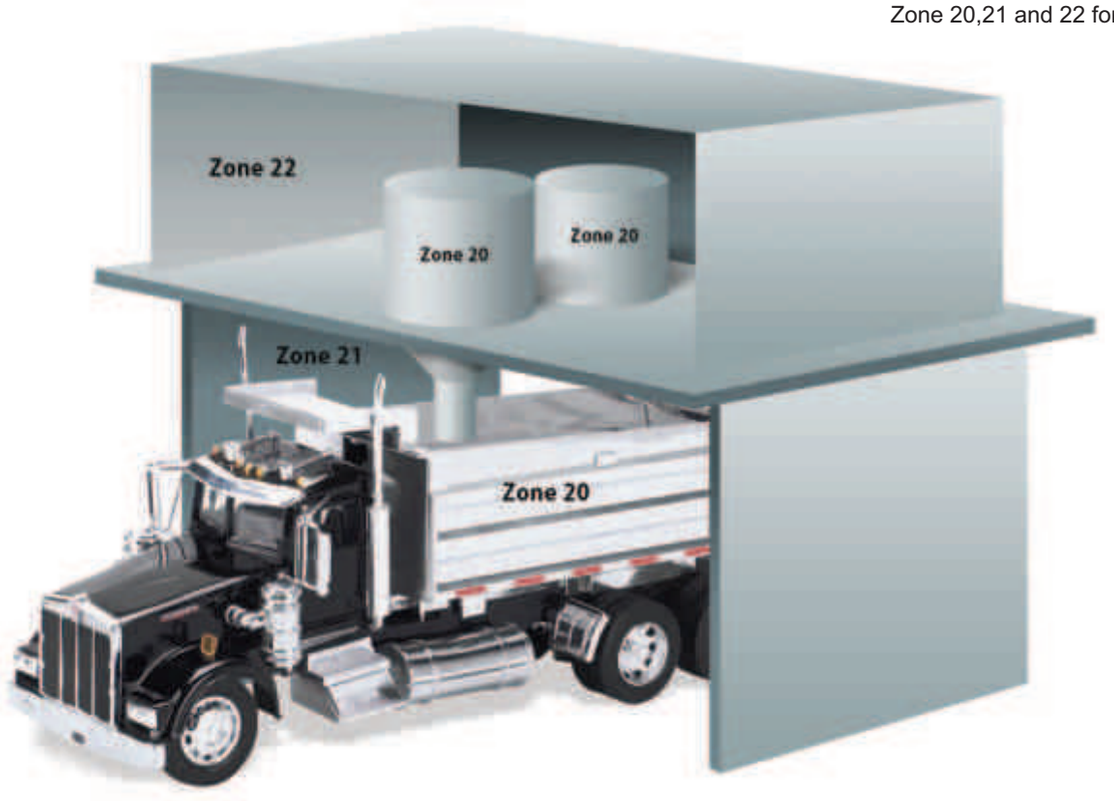

Illustration is for the purpose of understanding of zone applicability

GROUP

Based on the area of installation electrical equipment for explosive gas environment is divided into
• Group I - for equipment used in mines where addition to fire damp may contain other flammable gases
• Group II - for equipment used in explosive atmosphere other than mines

Equipment having Ex d, Ex ia, Ex ib, protection, group II and is further sub divided into IIA, IIB, and IIC

Equipment marked IIC can be used for group IIA or IIB. However equipment marked IIB can be used in group IIA but can not be used in group IIC classified area

TEMPERATURE CLASS

To prevent ignition due to heat based on the flammable media ignition temperature, the same are grouped
During continuous operation of the equipment, under the most unfavorable operating condition of the equipment maximum surface temperature of any part of the equipment should be under ignition temperature of the flammable media

The temperature limit has been classified as under.

T1	450 °C
T2	300 °C
T3	200 °C
T4	135 °C
T5	100 °C
T6	85 °C

A equipment with T5 certification can be installed for area classified as T4, however the same can not be installed in a area classified as T6

Specifications are subject to change without notice

ROTEX
Engineering For The Future

APPROVALS

A equipment with T5 certification can be installed for area classified as T4, however the same can not be installed in a area classified as T6

Rotex Solenoid have been certified for the following

	Explosion Proof Solenoid with Junction Box (FPJB)	Intrinsically Safe Solenoid
INDIA	Ex d IIC T6, IP66	Ex ia IIC T6, IP67
ATEX	EEx d IIC T4 or T5 or T6, IP66	EEx ia IIC T6, IP67
INMETRO	Ex d IIC T4 or T5 or T6, IP66	Ex ia IIC T6, IP67
GOST	Ex d IIC T4 or T5 or T6, IP66	Ex ia IIC T6, IP67
UL	Class I, DIV I grp A, B, C, D	
	Class II DIV II grp G, H	
	Class III	

Contact ROTEX for solenoid with IECEX, UL, and Canadian approval

ATEX NAME PLATE

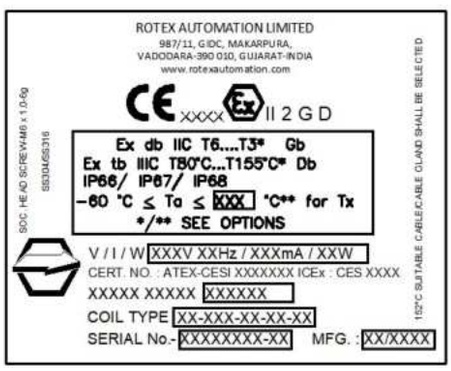

Certification (XX)		Supply (Current) (CCCC)	Temp. Class (T)
CCOE/ PESO+BIS	-	50 Hz	T4
CE - ATEX	01	60 Hz	T5
UL	02	DC	T6
INMETRO+ATEX	03		
CuTR-EAC+ATEX	04		
CE	CE		

F Works	YY Year	BBBB Batch No.	NNNN Sr. No.
VVVV		IIIII	WWW
Volts		Current mA	Power
SSS		DD	XX
Size		Cable Entry	Certification

AAA	=	Maximum Temperature of the Solenoid
MMM	=	Minimum Ambient Temperature
KKK	=	Maximum Ambient Temperature

When the Solenoid Valve is intended to be installed in European countries which accept ATEX directives, Solenoid Valve body or even a pneumatic pilot operated valve though it is a non electrical part also needs, to be certified towards hazards of fire/ explosion/ lightening

Rotex valve as a non electrical part is assessed for
IM2 T6
II2GD T6

ROTEX
Engineering For The Future

FLOW CHART FOR AIR

CHART 1 - FLOW RATE Q (Nm3/hr/kv) FOR AIR AT AMBIENT TEMPERATURE

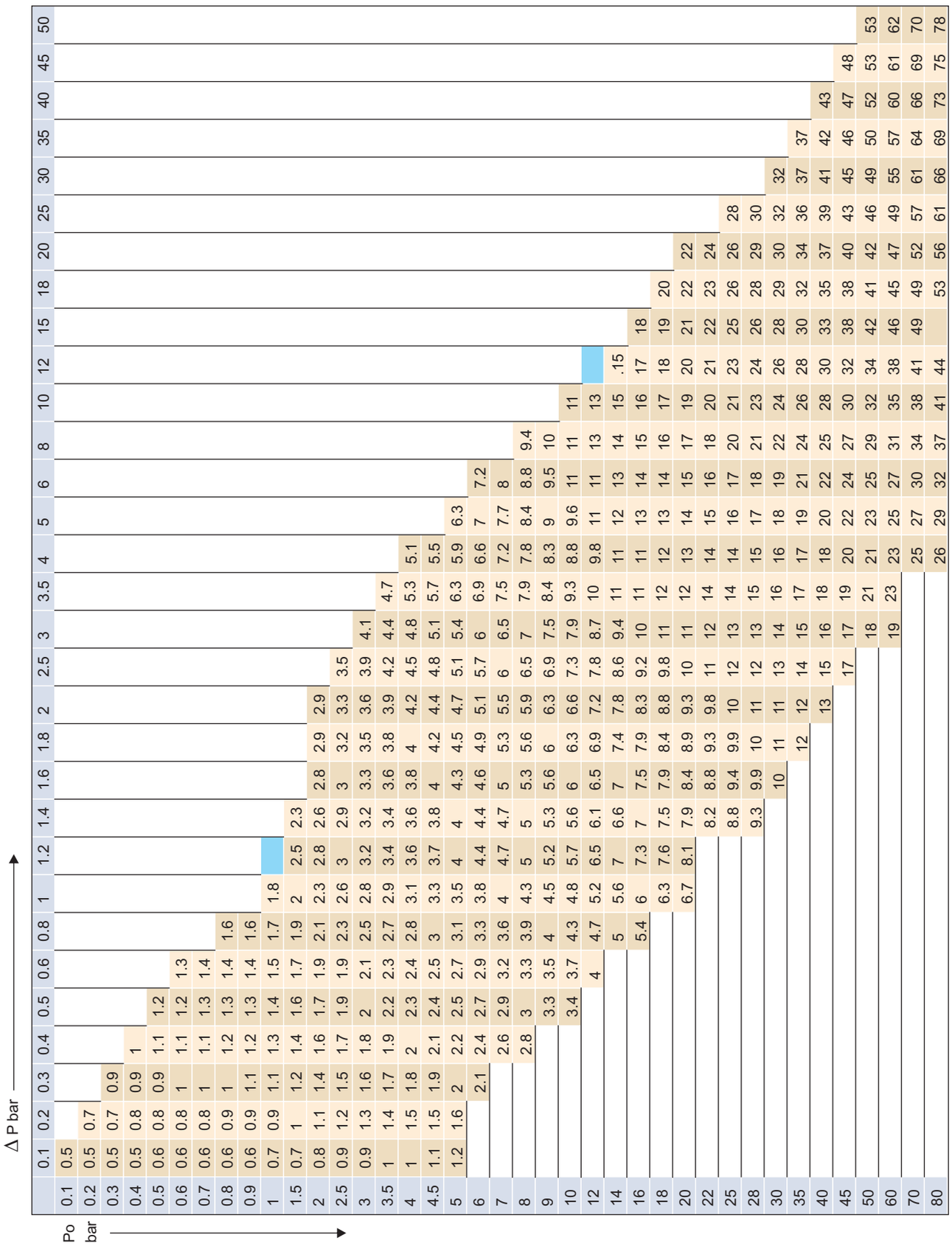

Specifications are subject to change without notice

FLOW CHART FOR WATER

FLOW RATE Q (l/min) FOR WATER

kv \ Δ P bar	0.1	0.2	0.4	0.6	0.8	1	1.5	2	3	4	5	6	8	10	12	15	18	20	25	30	40	50	75	100	150	200	250
1	0.3	0.44	0.6	0.77	0.9	1	1.2	1.4	1.7	2	2.2	2.4	2.8	3.1	3.4	3.8	4.2	4.4	5	5.5	6.3	7	8.6	10	12.2	14	16
1.2	0.4	0.53	0.76	0.9	1	1.2	1.5	1.7	2	2.4	2.6	3	3.4	3.8	4.1	4.6	5	5.3	6	6.5	7.6	8.5	10.5	12	14.7	17	19
1.5	0.5	0.67	0.95	1.1	1.3	1.5	1.8	2.1	2.6	3	3.3	3.6	4.2	4.7	5.2	5.8	6.3	6.7	7.5	8.2	9.5	10.6	13	15	18.7	21	24
2	0.6	0.9	1.2	1.5	1.8	2	2.5	2.8	3.5	4	4.4	5	5.6	6.3	7	7.7	8.5	9	10	11	12.6	14	17.3	20	24.5	28	32
3	0.9	1.35	1.9	2.3	2.7	3	3.7	4.2	5.2	6	6.7	7.3	8.5	9.5	10	11.6	12.7	13.4	15	16.4	19	21	26	30	36.7	42.5	48
4	1.2	1.8	2.5	3.1	3.6	4	4.9	5.6	7	8	9	9.8	11.3	12.6	13.8	15.5	17	18	20	22	25.7	28	34.5	40	49	56.5	63
5	1.6	2.2	3.1	3.9	4.5	5	6.1	7	8.6	10	11	12.5	14.2	15.8	17.3	19.3	21	22.4	25	27.4	31.6	35.4	43.5	50	61.3	70	79
6	1.9	2.7	3.8	4.6	5.3	6	7.3	8.5	10.4	12	13.4	14.7	17	19	20.8	23.2	25.4	27	30	33	38	42.4	52	60	73.5	85	95
8	2.5	3.6	5	6.2	7.1	8	9.8	11.3	13.8	16	18	19.6	22.6	25	27.7	31	34	36	40	43.8	50	56	70	80	98	113	126
10	3.1	4.5	6.3	7.7	9	10	12.2	14	17.3	20	22.3	24.5	28.3	31	34.6	38.7	42	45	50	55	63	70	86	100	122	141	158
12	3.7	5.3	7.6	9.3	10.7	12	14.7	17	21	24	26.8	29.4	34	38	41.5	46.5	51	54	60	65.6	76	85	104	120	147	171	190
14	4.3	6.2	8.8	10.8	12.5	14	17.1	20	24	28	31	34	39	44	48.5	54	59	63	70	76.6	88	99	121	140	171	198	221
16	5	7	10	12.4	14.3	16	19.6	22.6	27.7	32	36	39	45	50	55.5	62	68	71.5	80	87.5	101	113	138	160	196	226	253
18	5.6	8	11.4	14	16	18	22	25.4	31.2	36	40	44	51	57	62.5	70	76.5	81	90	98	114	127	156	180	220	254	284
20	6.2	9	12.6	15.5	18	20	24.5	28.3	35	40	44.6	49	56	63	70	77.5	85	90	100	109	126	141	173	200	245	283	316
25	7.8	11	15.8	20	22.4	25	30	35.4	43.4	50	56	61	65	79	86.5	97	106	112	125	137	158	177	216	250	306	354	395
30	9.3	13.4	19	23.2	27	30	37	42.5	52	60	67	73.5	85	95	104	116	127	134	150	164	190	212	260	300	367	425	475
35	11	15.6	22.5	27	31	35	43	50	60	70	78	85.7	99	110	121	135	148	156	175	192	222	248	303	350	429	495	554
40	12.4	17.8	25	31	36	40	49	56.5	69	80	90	98	113	126	138	155	170	179	200	219	257	283	346	400	490	565	632
45	14	20	28	35	40	45	55	64	78	90	100	110	127	142	156	174	191	201	225	246	285	318	390	450	552	637	712
50	15.5	22	31.6	39	45	50	61	70	86	100	112	125	142	158	173	193	212	224	250	274	316	354	433	500	613	707	790
60	18.6	27	38	46.5	54	60	73.5	85	104	120	134	147	170	190	208	232	254	268	300	328	380	424	520	600	735	850	950
70	21.7	31	44.3	54	63	70	86	99	121	140	156	171	198	221	242	270	297	313	350	384	443	495	606	700	857	990	110
80	25	35.7	50	62	71.5	80	98	113	138	160	179	196	226	253	277	310	340	358	400	438	505	566	693	800	980	1130	1265
90	28	40	57	70	80	90	110	127	156	180	200	220	254	285	312	348	381	402	450	493	570	637	780	900	1100	1270	1425
100	31.6	45	63	77	90	100	122	141	173	200	225	245	283	316	346	387	424	447	500	547	632	707	866	1000	1220	1410	1580

ROTEX
Engineering For The Future

FLOW FACTOR

Flow Factor is specified in various units as under :

kv = 1 is a flow of 1 litre of water in 1 minute through a valve, when the pressure drop ΔP across the valve is 1 kg/cm2

Cv = 1 is a flow of 1 US Gallon of water in 1 minute through a valve, when the pressure drop ΔP across the valve is 1 psi

KV = 1 is a flow of 1 cubic meter (m3) of water in 1 hour through a valve, when the pressure drop ΔP across the valve is 1 kg/cm2

f = 1 is a flow of 1 imperial Gallon of water in 1 minute through a valve, when the pressure drop ΔP across the valve is 1 psi

Qn = 1 is a flow of 1 Nominal liter of air in 1 minute through a valve, when the pressure drop ΔP across the valve is 1 bar, and inlet pressure 6 bar

Relation between the various flow factors is as under :

ORIFICE	kv	KV	Cv	PORT CONNECTION
0.8	0.3	0.018	0.021	1/8” or 1/4”
1	0.5	0.03	0.035	1/8” or 1/4”
1.2	0.7	0.042	0.049	1/8” or 1/4”
1.6	1.4	0.084	0.098	1/8” or 1/4”
1.8	1.8	0.108	0.126	1/8” or 1/4”
2.2	2.5	0.15	0.175	1/8” or 1/4”
2.5	3.5	0.21	0.245	1/8” or 1/4”
3	4	0.24	0.28	1/8” or 1/4”
3.5	5	0.3	0.35	1/4”
4	7	0.42	0.49	1/4”
5	10	0.6	0.7	1/4”
6	12	0.72	0.84	1/4”
7	18	1.08	1.26	1/4”, 3/8”, 1/2”
8	20	1.2	1.4	1/4”, 3/8”, 1/2”
9	22	1.32	1.54	1/4”, 3/8”, 1/2”
10	38	2.28	2.66	3/8”, 1/2”
12	50	3.6	4.2	1/2”
16	75	4.5	5.25	1/2”
20	110	6.6	7.7	3/4”
22	175	10.5	12.25	1”
25	185	11.1	12.95	3/8”, 1”
32	375	22.5	26.25	11/4”, 11/2”
40	410	24.6	28.7	11/2”
50	660	39.6	46.2	2”
65	850	50.9	59.5	21/2”
80	2000	119.9	140	3”

These are Suggested flow factors of ROTEX Solenoid Valves, Refer details for exact Flow factor of a particular model.

CONVERSION

CONVERT	TO	MULTIPLY BY
	FLOW FACTOR	
Cv	kv	14.3
Kv	kv	16.67
Qn	kv	0.0145
kv	Cv	0.07
f	Cv	1.206
Qn	Cv	0.001
kv	Kv	0.06
Cv	Qn	981.5
kv	Qn	68.65
Cv	f	0.829
	FLOW	
Liter/ min.	UK gallon/ min.	0.22
Liter/ min.	US gallon/ min.	0.26
Liter/ min.	m^3/ hr.	0.06
Nm^3/ hr	Cfm	0.6
l/ min	Cfm	0.035
	PRESSURE	
kg/ cm^2	Mpa	0.1
kg/ cm^2	mm of Hg	760
kg/ cm^2	mm of Water	10000
kg/ cm^2	PSI	14.3
kg/ cm^2	atm	1
kg/ cm^2	bar	1

Specifications are subject to change without notice

ROTEX
Engineering For The Future

SELECTION GUIDE : ORIFICE

ROTEX Solenoid Valves are modular in construction facilitating the user to select valves for various Application from wide range and different construction of solenoids independently

SELECTION OF BASIC VALVE TYPE:

Depending on the application of valve in system select e.g a 2/2 Valve for ON/ OFF application, 3/2 valve for a single acting actuator, mixing, diverting, Universal applications, 5/2 Valve for double acting actuator, cylinder etc.

VALVE SIZE and PORT CONNECTION :

The basic size of the valve is based on the kv (flow factor) of the valve

The kv Value is calculated through basic application information

(A) FLOW REQUIRED

I) Flow data
ii) Calculate flow from time in which a specific volume is to be delivered

(B) INLET PRESSURE - Po

C) Outlet Pressure-P_1 In most of the cases the outlet pressure is not known, the same can be arrived at from back pressure from equipment or based on the load on the equipment under operation
D) ΔP-Pressure drop across the valve (Po-P_1)
E) Operating temperature of media
F) Specific gravity of media

The flow factor (kv) can be calculated using following methods for AIR, LIQUIDS, GASES.

(1) FOR AIR

Refer into the kv chart No.1 (Page 412) for AIR. Select the inlet pressure and differential pressure. The result from chart yields flow in Nm^3/hr. For a value of flow factor kv=1, calculate the flow factor for the specific application.

$$kv = \frac{Q \text{ (Application specific)}}{Q \text{ (for kv=1)}}$$

Select the valve orifice size having calculated kv or nearest higher kv

TO FIND AN ORIFICE OF A VALVE

EXAMPLE 1

REQUIREMENT: To fill a volume of 100 liters, the inlet air pressure Po is 7 bar. The Volume to be filled in 20 seconds from 0-5 bar. P1 is 5 bar

First calculate m^3/ hr at 5 bar

$$\frac{100}{20} \times \frac{60 \times 60}{1000} = 18 m^3/\text{ hr.}$$

12

Specifications are subject to change without notice

SELECTION GUIDE : ORIFICE

So $Nm^3/hr = 18 \times 5 = 90 m^3/hr$
Pressure drop P across the valve is Po- P1=7-5 = 2 bar (ΔP)
Now refer Chart No1 (Page 412)
For Pressure drop ΔP=2 bar at Po=7 bar the flow rate
Q($Nm^3/hr/kv$) for air at ambient temperature is 5.5 $Nm^3/hr/kv$

$$Kv = \frac{90}{5.5} = 16.36$$

Nearest higher kv= 18 for an orifice of 7 mm
NOTE:
The exact formula for filling in and exhaust time for compressible fluid is different. The above example is most conservative

EXAMPLE 2

REQUIREMENT: To operate a cylinder of Ø100 mm ; stoke 300 mm, to complete travel in 3 seconds, the operating air pressure Po=5 bar

Flow require in Nm^3/hr

$$\text{Volume of air} = \frac{\pi}{4} \times d^2 \times L$$

$$= \frac{\pi}{4} \times \frac{100 \times 100}{1000 \times 1000} \times \frac{300}{1000} = 0.0023571 m^3$$

Volume of air per hour at 5 bar in m^3/hr

$$= 0.0023571 \times \frac{60}{3} \times 60 = 2.82852 m^3/hr$$

So Volume required at ambient temperature and pressure (Using Formula $P_1V_1 = P_2V_2$)

$$= 2.82852 \times 5 = 14.1424 Nm^3/hr$$

Now refer Chart No.1 (Page 412) for ΔP=0.1 bar at Po=5 bar the flow rate Q ($Nm^3/hr/kv$ for air at ambient temperature is 1.2 Nm^3/hr

$$kv = \frac{14.1424}{1.2} = 11.7855$$

Nearest kv= 12 for an orifice of 6 mm

SELECTION GUIDE : ORIFICE

For any other gases and liquids, the kv is calculated as under :

(2) FOR GASES

Q = Flow rate in Nm^3/hr
T = t+273 °C
t = Temperature in °C
Po = Inlet Pressure in atmospheric absolute in bar
ΔP = Differential pressure, bar
γ = Density in kg/m^3
kv = Flow factor of valve.

(1) $$Q = 28.5 \times kv \times \sqrt{\frac{\Delta P \times Po \times Y}{\gamma (t + 273)}}$$

Y = Correction factor

(2) $$Y = \frac{1 - \frac{\Delta P}{2 \times Po}}{}$$

Y is a correction factor which depends upon the relation between the inlet pressure and the pressure drop through the valve.
Y is always smaller than 1.
Select the valve orifice size having calculated kv or nearest higher kv.
Corresponding to a selected kv value for a given valve type, select an orifice for the valve.

(3) FOR WATER

$Q = kv \times \sqrt{\Delta P}$

For a known flow rate and differential pressure calculate kv using above formula and select the valve Orifice size having calculate kv or nearest higher kv. Alternatively, you may refer Chart No.2 (Page 413)

To FIND AN ORIFICE OF A VALVE

EXAMPLE 1

To fill up an open to atmosphere tank with 10 litres of water in 5 seconds. The inline pressure Po of water is at 10 kg/cm^2.

$$Q = \frac{V}{T} \times 60$$

Q = Quantity of water in litre/min
V = Volume in litre to be filled in
T = Time in seconds

$$Q = \frac{10}{5} \times 60 = 120 \text{ litre/min}$$

Now Refer Chart No.2 (Page 413)

For Pressure drop ΔP of 10 bar for 126 litre/min, the kv=40

Nearest higher kv=75 for an orifice of NW=16 mm

Alternatively, you may select kv= 38 for an orifice of NW=10mm,
Provided reduction in the flow (about 0.2% in this case) is acceptable
Actual kv in this case will be :

$Q : kv \sqrt{\Delta P}$ $\quad kv = \frac{Q}{\sqrt{\Delta P}}$

SELECTION GUIDE : ORIFICE

(4) FOR LIQUIDS

$$Q = kv \times \sqrt{\frac{\Delta P}{\gamma}}$$

Q = Flow rate required in litre/min.
ΔP = Differential pressure in kg/cm2.
γ = Specific gravity of the liquid at the media temperature.

Select the valve orifice size having calculated kv or nearest higher kv.

Corresponding to a selected kv value for a given valve type, select an orifice for the valve

Rotex can provide standard end connection for the selected orifice e.g. 6 mm orifice can be provided with 1/4” BSP/ NPT to 3/4” BSP/ NPT. The valve can also be provided with Flanged End, ANSI B16.5 (or as per your specification) end connection. The end connection selected should not be smaller than the orifice size. The valves can be sub-base mounted for special application

As a user, by selecting an appropriate orifice and end connection, you
- select a product rightly suited to application
- select an economically most viable solution
- can save piping cost by selecting end connection matching nearest to the existing piping system

Specifications are subject to change without notice

ROTEX
Engineering For The Future

SELECTION GUIDE : BODY MATERIAL AND INTERNALS

ROTEX offers a wide range of body material and internals to suit the media as well as environment. Users are recommended to use following guide while selecting the body material of the Solenoid Valve for their application. As a standard, Aluminum body valve is supplied with internals of Aluminum, Brass and SS. A Brass body valve is supplied with internals of Brass and SS. SS Body valve is supplied with internals of SS.

ROTEX offers FOUR basic body materials :

1) ALUMINUM HARD ANODIZED

- Treatment produces corrosion resistant, wear resistant and a tough surface
- Increase in surface strength results in stronger threads on ports and mountings
- Achieve surface hardness
- Improves surface finish due to inherent nature of the process
- Port connection BSP/ NPT

2) BRASS (Extruded)

- Grade as per IS 319. Extruded Brass is equivalent to forged Brass specification
- Most suitable for applications for Water, Oxygen Service
- **ROTEX** strongly recommends that the surface treated Aluminum out perform Brass for most of the application
- Port connection usually NPT

3) STAINLESS STEEL (SS 316)

- Ideal for highly corrosive environment involving strong Acid and Alkaline environment
- Ideal for instrumentation application
- Ideal for high temperature application
- Port connection normally NPT, except for 2/2, inline diapharm or piston actuated valve

4) PTFE BODY

- All working parts are fully lined
- Ideal for corrosive media
- Not suitable for frequent changes in mountings

5) PLASTIC BODY

- Suitable for low and medium temperature, corrosive media or commercial application
- Maximum media temperature up to 80 °C
- Not suitable for frequent changes in mountings

Following options are available for selection of Body Material and Internals :

Body	Internals	Code	Remarks
Aluminium	Standard	※	Internal Components of Aluminium, Brass, SS 316
Aluminium	SS 316	B1	Internal Components of SS 316
Brass	Standard	B2	Internal Components of Brass, SS 316
SS 316	Standard	B5	Internal Components of SS 316
Stainless Steel, Cast	SS 316	B12	Internal SS 316

Specifications are subject to change without notice

SELECTION GUIDE : SEALS

ROTEX offers variety of solution in seals for various applications. The seals are to be selected on the basis of their compatibility to media., temperature and pressure etc. Seal material will be generally selected by Rotex depending upon media, media pressure and temperature. For best results, it will be better to consult Rotex

(1) NBR (Buna-N, Nitrile etc.)

Fitted as a standard in ROTEX products

Suitable for all general application up to a ambient/ media temperature of -25 °C to 75 °C

(2) EPDM (Ethylene Propylene Di-Methyl) (S1)

Excellent for Nuclear applications, especially for exposure to Radiation. (GRADE R13)
Moderate corrosion resistance
Excellent shelf life

Ideal for high temperature air, water and steam up to -60 °C to 140 °C

(3) Viton (S2)

Ideal for high temperature media/ environment
Ideal for corrosive applications
Excellent shelf life

Media temperature up to -20 °C to 160 °C

(4) NEOPRENE (S3)

Ideal for use with oils
Good shelf life
Suitable for refrigerant application
Should be opted for hydro carbon media

Media temperature -30°C to 100 °C

(5) F.SILICON (S19)

Ideal for high temperature
Good for medical application
Good corrosion resistance

Media Temperature up to -60 °C to 190 °C

(6) PTFE (S4)

Ideal for most media
Do not use as a standard unless application really calls for PTFE
Nearly unlimited shelf life
Not recommended for Radiation Exposure

Media temperature up to -70 °C to 200 °C

(7) SAPPHIRE (S6)

Excellent corrosion resistance
Ideal for high temperature up to 350 °C

Selected for service temperature above -196 °C + 350 °C

ROTEX valve can be provided with seat and seal material other than listed above.

(8) Viton GLT (S2G)

Ideal for high temperature media/ environment
Ideal for corrosive applications
Excellent shelf life

Media temperature up to -40 °C to 160 °C

(9) Hytrel (S11)

Used for replacing NBR diaphragm.
Excellent Resistance to most Chemicals and provides long life.

Media temperature up to 0 °C to 80 °C

Specifications are subject to change without notice

SELECTION GUIDE : MANUAL OVERRIDE



PUSH AND TURN (M6) UP TO 20 bar

With this manual override, valve can be operated by pushing Manual Override. The valve will reset when Manual Override is released. The valve can be latched by pushing Manual Override and turning Clockwise(CW). To release, to turn Manual Override anticlock wise(ACW). Suitable up to 20 bar pressure

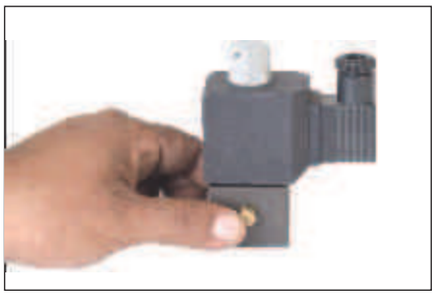

PUSH (M8) UP TO - 20 bar

With this type of Manual Override the valve can be actuated by pushing Manual Override. This type of Manual Override is supplied for double solenoid valve. The valve will reset when Manual Override is released. Suitable up to 20 bar pressure



PUSH AND TURN (M2) WITH KNOB UP TO 20 bar

This Manual Override is same as M6 however it has a knob for operating Manual Override
This type of manual override can be opted for valve type which can be supplied with manual override type M6 or M8



PUSH WITH KNOB (M8K) UP TO 20 bar

Same as M8 but with knob

Specifications are subject to change without notice

SELECTION GUIDE : MANUAL OVERRIDE

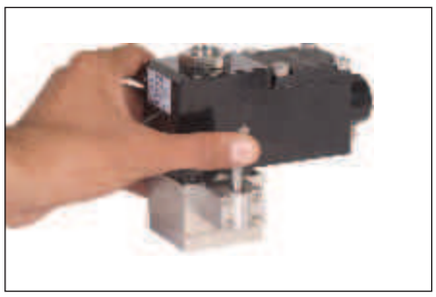

LEVER TYPE (M5) UP TO 40 bar

This is momentary type Manual Override suitable up to 40 bar pressure. The valve can be actuated by pressing lever. Releasing lever shall reset valve



MALA (M12/ M17) UP TO 40 bar

This is a stayput type Manual Override. Suitable up to 40 bar pressure. The valve can be actuated by turning lever CW, and to release turn lever ACW The manual override operated by hand (MR). This manual override can be provided with knob. (M17)

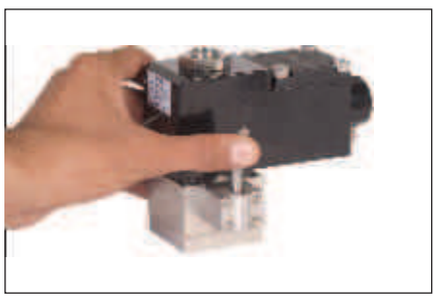

HIGH PRESSURE LEVER TYPE (M4) UP TO 150 bar

This is similar to M5 but suitable for pressure up to 150 bar



HIGH PRESSURE MALA (M11/ M16) UP TO 150 bar

This is similar to M12 but suitable for pressure up to 150 bar
Select (M16) when this type of manual override is required with knob

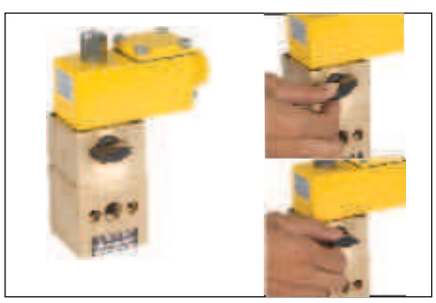

KNOB TYPE LATCHED MANUAL OVERRIDE (M7/M13) UP TO 20 bar

M7 (For Latch Valve): -In normal condition manual override is to be kept in horizontal. To latch the valve, Turn Manual Override anti clock wise. Then brings to normal position. To delatch the valve, Turn the Manual Override clock wise. Then bring to normal position.

M13 (Manual Reset OFF Valve):-In normal condition Manual Override is to be kept in horizontal. To delatch the valve, turn the Manual Override clock wise. Then bring to normal position.

Specifications are subject to change without notice

ROTEX
Engineering For The Future

CLASS OF INSULATION AND SOLENOID LIFE

Life of the Solenoid depends on ambient temperature, duty cycle, temperature rise and class of insulation used for the solenoid. Temperature rise depends on design, current density and insulation system of the coil. Rotex ensures that for all its design of the coil, temperature rise above ambient is less than 70 °C
As per IS 4800 standard, insulation system is designed for minimum life of for 20000 Hours When used continuously. Using the half life decay principle, every 10 °C reduction of the coil temperature, twice the life can be extra polated. Considering worst temperature rise of the coil at 1.2 times the rated voltage, continuously energized coil shall be less than 70 °C. For a ambient temperature of 55 °C, the maximum temperature of the coil will be 55 + 70 = 125 °C
For a Solenoid having class F insulation minimum life expected shall be as under:
20000 Hours at 155 °C
40000 Hours at 145 °C
80000 Hours at 135 °C
160000 Hours at 125 °C
Which means, Life of a Continuously energized Solenoid having Class F Insulation, i.e. (ambient of 55 °C) is Minimum of 160000 Hrs ie 18 Yrs.
In case if more life is expected then Solenoid with better insulation or lower temperature rise is to be used (e.g. Low Power Solenoid)

ELECTRICAL SPECIFICATION

STANDARD

CURRENT	AC	DC	AC/ DC
PICK UP (Cold	≤ 70%	≤ 70%	≤ 70%
% of rated voltage)			
DROP DOWN	≤ 50%	≤ 10%	≤ 10%
(% of rated voltage)			
RESPONSE 'ON'	≤ 10ms	≤ 8ms	≤ 8ms
VOLTAGE VARIATION	± 20%	± 20%	± 20%

ELECTRICAL SPECIFICATION FOR SOLENOID FEATURES LC, LW, ML

CURRENT	AC	DC
PICK UP	≤ 80%	≤ 80%
(% of rated voltage)		
DROP DOWN	≤ 10%	< 10%
(% of rated voltage)		
RESPONSE 'ON'	≤ 10ms	≤ 8ms
VOLTAGE VARIATION	±10%	±10%

POWER (Watt)

SOLENOID SIZE	AC	DC
8	6	5
10	6	8
13	0.3	0.3
14	6	8
18	13	13

HUMIDITY

95% rh @ 95 °C

Specifications are subject to change without notice

DIN PLUG IN SOLENOID TYPE : 22, 25

CIRCUIT DIAGRAM

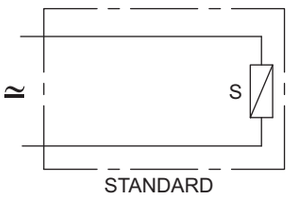

STANDARD

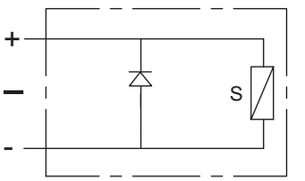

SS

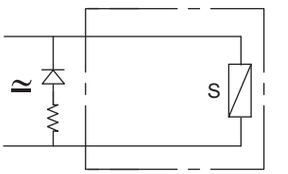

LD

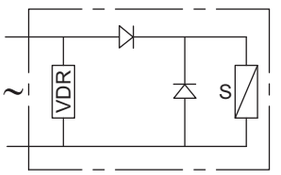

RC

FEATURES

- Designed for extreme environmental condition
- Constructed for lowest temperature rise thus longer life
- 'O' Energiser for higher magnetic linkage
- Wider voltage variation
- DIN Plug supplied with Solenoid



SPECIFICATION

Size	I-14 mm, II-18 mm & III-14 mm, 13mm, IV-14mm
Voltage	6 V, 12 V, 24 V, 48 V, 110 V, 220 V
Current	50 Hz, 60 Hz, DC
Enclosure	**Cable Entry** Pg 9 : As per DIN 43650 Type A & Type B **Material** Moulded plastic, Steel Chrome plated
Options	Surge Suppressor (SS), LED (LD), Low Power (LW), Rectified (RC)
Power	Refer to table "Power" on page 425A
Insulation Class	Class F, Optionally Class H
Weather Protection	IP67, IP67 M
Approval	Indian, European, SIL
Voltage Variation	Refer to Voltage Variation Table (on page 425B)
Duty Cycle	100% (ED)
Ambient Temperature	Class F, Power ≤ 13W, -20 °C to 75 °C Class H, Power ≤ 13W, -20 °C to 100 °C, Power ≥ 13W, -20 °C to 75 °C

WEIGHT IN kg

Size	Moulded Plastic	Steel
I	0.2	0.250
II		0.450
III		0.370

APPLICATION



ROTEX
Engineering For The Future

DIN PLUG IN SOLENOID TYPE : 22, 25

POWER

Voltage	Solenoid		Power (VA)							
	Size	Core Dia	0.4②	1.8②	3.5	8	12	13	30②	20②
6	I	14								
	II	18				✓		▲		
	III	13	✓							
	III	14		✓	✓	▲				
	IV	14		✓						
12	I	14				▲	▲			
	II	18				✓		▲	✓	✓
	III	13	✓							
	III	14		✓	✓	▲				
	IV	14		✓						
24	I	14		✓		▲	▲			
	II	18				✓		▲	✓	✓
	III	13	✓							
	III	14		✓	✓	▲				
	IV	14		✓						
48	I	14				▲	▲			
	II	18						▲	✓	✓
	III	14		✓	✓	▲				
110-120	I①	14					▲			
	II	18				✓		▲	✓	✓
	III	14				▲				
220-240	I①	14					▲			
	II	18				✓		▲	✓	✓
	III	14				▲				
256②	II	18				✓		▲	✓	✓
	III	14				▲				

▲ Standard
✓ Optional Available

① Select Current 50 Hz or 60 Hz
② Select Current DC

STANDARD POWER

Size	Current	Standard Power W, VA
I	AC	6, 12
	DC	8, 8
II	AC	13, 13
	DC	13, 13
III	AC	6, 12
	DC	8, 8

Specifications are subject to change without notice

DIN PLUG IN SOLENOID TYPE : 22, 25

SOLENOID ORDERING CODE

III-24V-DC-22-SS-LD-LW5-H

III	24V	DC	22	SS	LD
SIZE	VOLTAGE	CURRENT	ENCLOSURE	SPECIAL VERSION	SPECIAL VERSION

SIZE
I
II②③
III②
IV②

6V
12V
24V
48V
110-120V⑧
220-240V⑨
256V⑪

50Hz
60Hz⑧⑨
DC⑮

CABLE ENTRY(F)	CODE
22 mm plug as per DIN 43650 Type B	22
36 mm plug as per DIN 43650 Type A	25

FEATURE 1	CODE
NIL	※①
SURGE SUPPRESSOR	SS ②
HALF RECTIFIED	RC
DIN PLUG WITH FULL RECTIFIER	FR ⑤

FEATURE 2	CODE
NIL	※①
LED⑭	LD

LW5	H	
POWER⑥	INSULATION	APPROVAL

VA	CODE
▲	※①
0.4	LW0.3 ②
1.8	LW2
3.5	LW3.5
5	LW5
8	LW8
12	LW12
15	LW15⑪
20	LW20⑪

CLASS	CODE
CLASS F	※①
CLASS H	H

APPROVAL	CODE
INDIAN	※①
EUROPEAN	CE

NOTE : ① Do not specify

② Select enclosure code 25

③ Current 50 Hz, 60 Hz, Select Special version RC

⑤ Select DC current coil to operate for 50 Hz or 60 Hz e.g. 110V DC-25-PR can be use for 110V 50 Hz or 120V, 60 Hz or DC

⑥ Refer Power table on page 425A

⑧ 110-120V 50 Hz Solenoid can be used for 110V 50 Hz,120V 60 Hz

⑨ 220-240V 50 Hz Solenoid can be used for 220-240V 50 Hz, 240V 60 Hz

⑪ Select Special version FR for current 50 Hz or 60 Hz

⑭ Voltage 24, 110, 220V current 50 Hz, 60 Hz, DC, LED provided in DIN plug

⑮ 110-120V, 220-240V, current DC, size II, III

VOLTAGE VARIATION (For Continuous Duty only)

Rated Voltage	Operating Voltage
6	4.8V to 7.2V
12	9.6V to 14.4V
24	19.2V to 28.8V
48	38.4V to 57.6V
110-120	88V to 132V
220-240	176V to 264V
256	192V to 280V

ROTEX
Engineering For The Future

DIN PLUG IN SOLENOID TYPE : 22, 25

DIMENSION

SOLENOID TYPE : 22

Plug as per DIN 43650 Type B

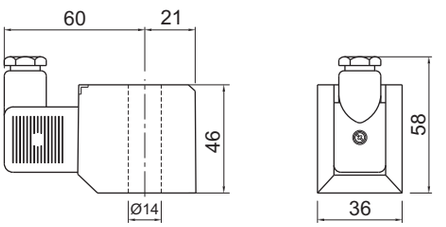

SOLENOID TYPE : 25

Plug as per DIN 43650 Type A

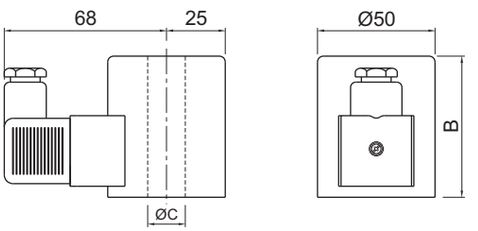

SIZE	ØC	B
III	13	43
II	18	60
IV	14	60
III	14	43

OBSELETE PRODUCTS AND ITS INTERCHANGEABILITY

 Replace with Solenoid code 22 or 25 along with Guide & Plunger Assembly	 Replace with Solenoid coil code 22			

Specifications are subject to change without notice

FLYING LEAD SOLENOID TYPE : 01, 04, 06

CIRCUIT DIAGRAM

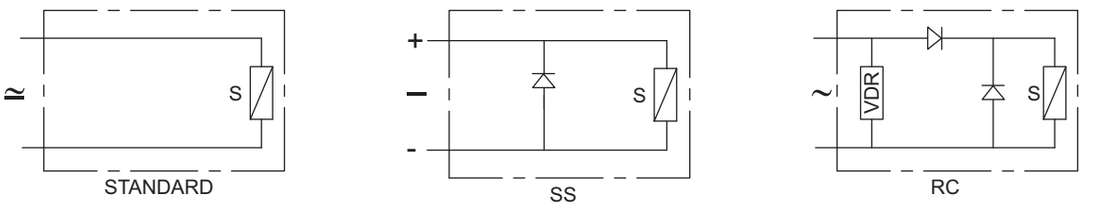

FEATURES

- Designed for extreme environmental condition
- Constructed for lowest temperature rise thus longer life
- 'O' Energiser for higher magnetic linkage
- Wider voltage variation



SPECIFICATION

Size	I-14 mm, II-18 mm, III-14 mm
Voltage	6 V, 12 V, 24 V, 48 V, 110 V, 120 V, 220 V
Current	50 Hz, 60 Hz, DC
Enclosure	**Cable Entry** Flying Leads **Material** Steel, Chrome Plated
Options	Surge Suppressor(SS)
Power	Refer to table "Power" on page 426A
Insulation Class	Class F optionally Class H
Weather Protection	IP54, Optionally IP67
Approval	Indian
Voltage Variation	Refer to Voltage Variation table (on page 426B)
Duty Cycle	100% (ED)
Ambient Temperature	-20 °C to 60 °C

WEIGHT IN kg

Size		Steel
I		0.2 kg
II		0.4 kg
III		0.3 kg

APPLICATION



INDOOR

ROTEX
Engineering For The Future

FLYING LEAD SOLENOID TYPE : 01, 04, 06

POWER

Voltage	Solenoid		Power (VA)						
	Size	Core Dia					8	12	13
6	I	14					▲		
	II	18							▲
12	I	14					▲	▲	
	II	18							▲
24	I	14					▲	▲	
	II	18							▲
48	II	18							▲
110-120	I①	14						▲	
	II	18							▲
	III	14					▲		
220-240	I①	14						▲	
	II	18							▲
	III	14					▲		

▲ Standard
✓ Optional Available
① Select Current 50 Hz or 60 Hz

STANDARD POWER

Size	Current	Standard Power W, VA
I	AC	6, 12
	DC	8, 8
II	AC	13, 13
	DC	13, 13
III	AC	6, 12
	DC	8, 8

Specifications are subject to change without notice

FLYING LEAD SOLENOID TYPE : 01, 04, 06

SOLENOID ORDERING CODE

III-24V-DC-01-SS-H

I	24V	DC	01	SS	H
SIZE	VOLTAGE	CURRENT	ENCLOSURE	SPECIAL VERSION	INSULATION

SIZE CODE
I
II③
III

6V
12V
24V
48V
110-120V⑧
220-240V⑨

50Hz
60Hz⑧⑨
DC⑮

CABLE LENGTH	CODE
0.6m FLYING LEAD IP54	06
FLYING LEAD 0.6m IP67	01
FLYING LEAD 1.5m IP67	04

FEATURE	CODE
NIL	※①
SURGE SUPPRESSOR	SS
HALF RECTIFIED	RC3

CLASS	CODE
CLASS F	※①
CLASS H	H

NOTE :
① Do not specify
③ Current 50 Hz, 60 Hz, Select Special version RC
⑥ Refer Power table on page 426A
⑧ 110-120V 50 Hz Solenoid can be used for 110V 50 Hz,120V 60 Hz
⑨ 220-240V 50 Hz Solenoid can be used for 220-240V 50 Hz, 240V 60 Hz
⑮ 110-120V, 220-240V, DC can be supplied in Solenoid size II, III

VOLTAGE VARIATION (For Continuous Duty only)

Rated Voltage	Operating Voltage
6	4.8V to 7.2V
12	9.6V to 14.4V
24	19.2V to 28.8V
48	38.4V to 57.6V
110-120	88V to 132V
220-240	176V to 264V

ROTEX
Engineering For The Future

FLYING LEAD SOLENOID TYPE : 01, 04, 06

DIMENSION

SOLENOID TYPE : 01, 04, 06

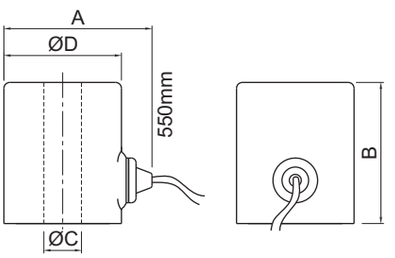

SIZE	A	B	ØC	ØD
I	56	42	14	42
II	64	60	18	50
III	63	43	14	50

OBSELETE PRODUCTS AND ITS INTERCHANGEABILITY

Specifications are subject to change without notice

FLYING LEAD WITH CABLE ENTRY SOLENOID TYPE : 08

CIRCUIT DIAGRAM

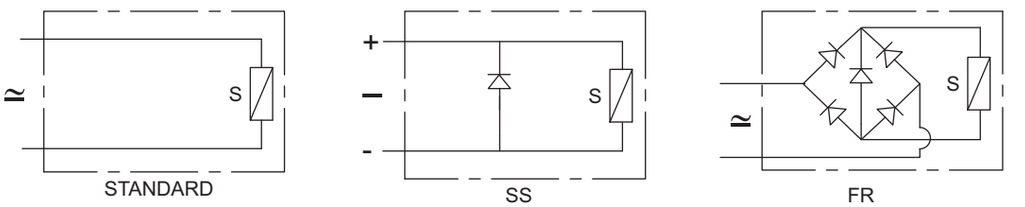

FEATURES

- Designed for extreme environmental condition
- Constructed for lowest temperature rise thus longer life
- 'O' Energiser for higher magnetic linkage
- Wider voltage variation
- UL Listed file number (applied for)

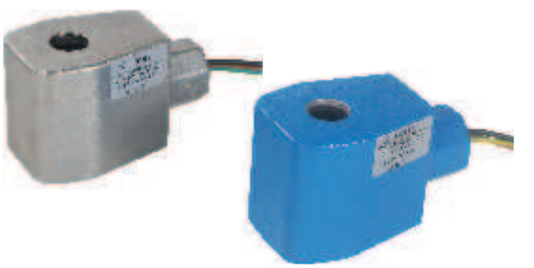

SPECIFICATION

Size	II- 18 mm, III- 13 mm, III & IV - 14 mm
Voltage	6 V, 12 V, 24 V, 110 V, 220 V, 256 V, 110-120V, 220-240V
Current	DC, 50/ 60 Hz/ DC
Enclosure	**Cable Entry** 1/2" NPT (F) **Material** Aluminum Cast, Polyster Powder coat, Colour Black/ Blue Stainless Steel casting
Options	Surge Suppressor(SS), Fully Rectified (FR), Low Power (LW) Manual Reset ON (MR)
Power	Refer to table "Power" on Page 427A
Insulation Class	Class H
Weather Protection	Type 3, 3S, 3R, 4, 4X, 6, 6P
Approval	UL Listed
Voltage Variation	Refer to Voltage Variation Table (on page 427B)
Duty Cycle	100% (ED)
Ambient Temprature	Power ≤ 20W, -60 °C to 100 °C, Power >20W, ≤30W, -60 °C to 70 °C

WEIGHT IN kg

Size	Al/ kg	SS/ kg
II	0.7	0.9
III	0.6	

APPLICATION



ROTEX
Engineering For The Future

FLYING LEAD WITH CABLE ENTRY SOLENOID TYPE : 08

POWER

Voltage	Solenoid		Power (VA)					
	Size	Core Dia	0.4②	1.8②	3.5	8	13	30
6	II	18				✓	▲	
	III	13	✓					
	III	14		✓	✓	▲		
	IV	14		✓				
12	II	18				✓	▲	✓
	III	13	✓					
	III	14		✓	✓	▲		
	IV	14		✓				
24	II	18				✓	▲	✓
	III	13	✓					
	III	14		✓	✓	▲		
	IV	14		✓				
110-120	II	18				✓	▲	✓
	III	14			✓	▲		
220-240	II	18				✓	▲	✓
	III	14				▲		
256②	II	18				✓	▲	✓
	III	14				▲		

▲ Standard
✓ Optional Available

② Select Current DC

STANDARD POWER

Size	Current	Standard Power W, VA
I	AC	6, 12
	DC	8, 8
II	AC	13, 13
	DC	13, 13
III	AC	6, 12
	DC	8, 8

Specifications are subject to change without notice

ROTEX
Engineering For The Future

FLYING LEAD WITH CABLE ENTRY SOLENOID TYPE : 08

SOLENOID ORDERING CODE

III-24V-DC-08-H-02

SIZE	VOLTAGE	CURRENT	ENCLOSURE	SPECIAL VERSION
III	24V	DC	8	LC

SIZE

SIZE CODE
II
III
IV

VOLTAGE

6V
12V
24V
110-120V
220-240V
256V②

CURRENT

50Hz/ DC④
DC

ENCLOSURE

CABLE ENTRY(F)	CODE
1/2" NPT	08

MATERIAL	CODE
AL CAST	※①
SS CAST	CO

SPECIAL VERSION

FEATURE	CODE
NIL	※①
FULLY RECTIFIED	FR
SURGE SUPRESSOR	SS
MANUAL RESET	MR②

INSULATION

CLASS	CODE
CLASS H	※

POWER⑥

VA	CODE
▲	① ※
0.4	LW0.4
1.8	LW2
3.5	LW3.5
5	LW5
8	LW8
15	LW15
20	LW20
30	LW30

APPROVAL

APPROVAL	CODE
UL, US- CANADA	02

NOTE :

① Do not Specify

② Select current DC

④ Select special version 'FR'

⑥ Refer Power table on page 427A

VOLTAGE VARIATION

(For Continuous Duty only)

Rated Voltage	Operating Voltage
6	4.8V to 7.2V
12	9.6V to 14.4V
24	19.2V to 28.8V
48	38.4V to 57.6V
110-120	88V to 132V
220-240	176V to 264V
256	192V to 280V

ROTEX
Engineering For The Future

FLYING LEAD WITH CABLE ENTRY SOLENOID TYPE : 08

DIMENSION

SOLENOID TYPE : 08

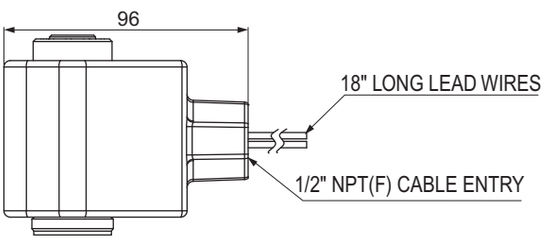

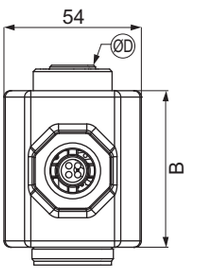

SIZE	B	ØD*
II	61	18
III	47	14
IV	61	14

OBSELETE PRODUCTS AND ITS INTERCHANGEABILITY

Specifications are subject to change without notice

ROTEX
Engineering For The Future

TERMINAL BOX SOLENOID TYPE : 16, 19

CIRCUIT DIAGRAM

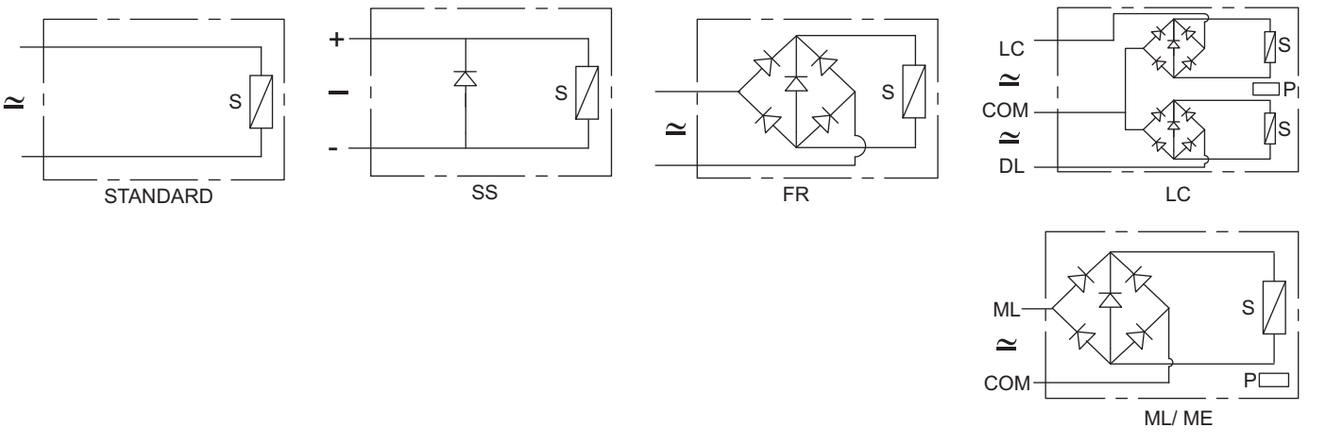

FEATURES

- Designed for extreme environmental condition
- With Integrated terminal box and Horizontal cable entry
- Wider voltage & frequency variation
- 'O' energiser for higher magnetic linkage
- Large terminals for easy connections
- Internal as well as external earth terminal
- Constructed for lowest temperature rise thus longer life



SPECIFICATION

Size	I- 14 mm, II- 18 mm, III- 13 mm, III & IV - 14 mm
Voltage	6 V, 12 V, 24 V, 48 V, 110 V, 120 V, 220 V, 256 V
Current	50 Hz, 60 Hz, DC, 50/ 60 Hz/ DC
Enclosure	**Cable Entry** M25X1.5, Adopted to M20 X 1.5 or 1/2" NPT **Material** Aluminum Cast Painting : Polyster Powder coated Stainless Steel Cast, Optionally Polyster Powder coated Painted
Options	Surge Suppressor(SS), Fully Rectified (FR), Latch (LC), Latch, Manual Reset OFF (ML), Manual Reset ON (MR), LED (LD)
Power	Refer to table "Power" on Page 428A
Insulation Class	Class F, Optionally Class H
Weather Protection	IP67, Optionally IP67M, IP68
Approval	Indian, European, SIL
Voltage Variation	Refer to Voltage Variation Table (on page 428B)
Duty Cycle	100% (ED)
Ambient Temprature	Class F, Power ≤ 13W, -40 °C to 75 °C Class H, Power ≤ 13W, -40 °C to 100 °C, Power ≥ 13W, -40 °C to 75 °C

WEIGHT IN kg

Size	Al	SS
I	0.5	1.2
II	0.8	1.7
III	0.6	1.4
IV	0.8	1.6

APPLICATION



ROTEX
Engineering For The Future

TERMINAL BOX SOLENOID TYPE : 16, 19

POWER

Voltage	Solenoid		Power (VA)								
	Size	Core Dia	0.4②	1.8②	3·5	5	8	12	13	30	20
6	I	14					▲				
	II	18					✓		▲		
	III	13	✓								
	III	14		✓	✓		▲				
	IV	14		✓							
12	I	14		✓			▲	▲			
	II	18					✓		▲	✓	✓
	III	13	✓								
	III	14		✓	✓		▲				
	IV	14		✓							
24	I	14		✓			▲	▲			
	II	18					✓		▲	✓	✓
	III	13	✓								
	III	14		✓	✓	✓	▲				
	IV	14		✓							
48											
	II	18							▲	✓	✓
	III	14		✓	✓		▲				
110-120	I①	14				✓	▲	▲			
	II	18					✓		▲	✓	✓
	III	14			✓		▲				
220-240	I①	14				✓	▲	▲			
	II	18					✓		▲	✓	✓
	III	14					▲				
256②	II	18					✓		▲	✓	✓
	III	14				✓	▲				
440④	III	14						▲			

▲ Standard
✓ Optional Available

① Select Current 50 Hz or 60 Hz
② Select Current DC
④ Select Current 50 Hz

STANDARD POWER

Size	Current	Standard Power W, VA
I	AC	6, 12
	DC	8, 8
II	AC	13, 13
	DC	13, 13
III	AC	6, 12
	DC	8, 8

Specifications are subject to change without notice

TERMINAL BOX SOLENOID TYPE : 16, 19

SOLENOID ORDERING CODE

III-24DC-16-CO-SS-LD-LW5-H

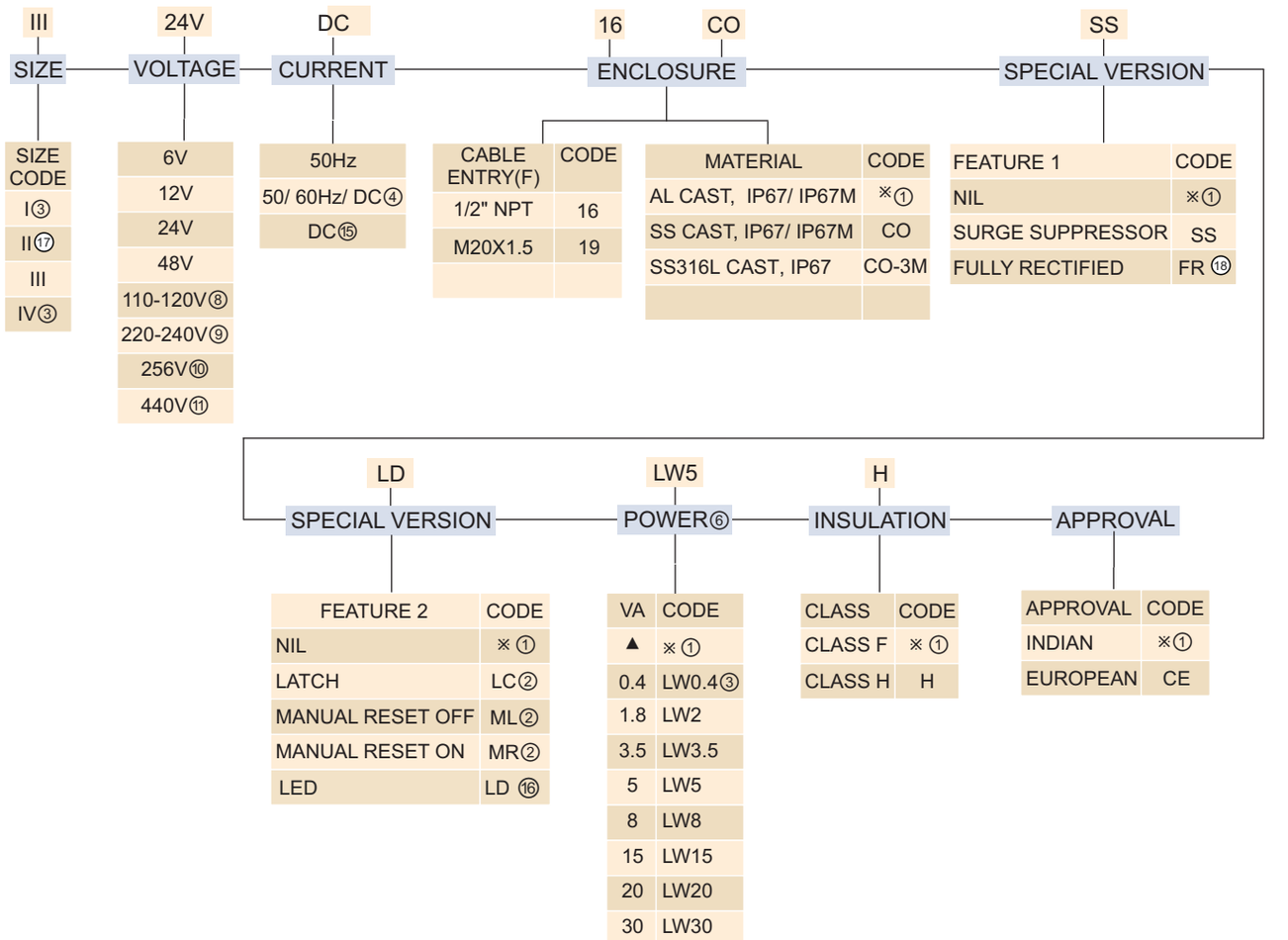

SIZE CODE
I③
II⑰
III
IV③

6V
12V
24V
48V
110-120V⑧
220-240V⑨
256V⑩
440V⑪

50Hz
50/ 60Hz/ DC④
DC⑮

CABLE ENTRY(F)	CODE
1/2" NPT	16
M20X1.5	19

MATERIAL	CODE
AL CAST, IP67/ IP67M	※①
SS CAST, IP67/ IP67M	CO
SS316L CAST, IP67	CO-3M

FEATURE 1	CODE
NIL	※①
SURGE SUPPRESSOR	SS
FULLY RECTIFIED	FR ⑱

FEATURE 2	CODE
NIL	※①
LATCH	LC②
MANUAL RESET OFF	ML②
MANUAL RESET ON	MR②
LED	LD ⑯

VA	CODE
▲	※①
0.4	LW0.4③
1.8	LW2
3.5	LW3.5
5	LW5
8	LW8
15	LW15
20	LW20
30	LW30

CLASS	CODE
CLASS F	※①
CLASS H	H

APPROVAL	CODE
INDIAN	※①
EUROPEAN	CE

NOTE : ① Do not specify

② Voltage 24V, 110-120V, 220-240V current 50/ 60 Hz/ DC power standard size II/ III

③ Current 50/ 60 Hz/ DC Special version FR can not be opted

④ Select Option FR for 50/ 60 Hz/ DC current

⑥ Refer Power table on page 428A

⑧ 110-120V 50 Hz Solenoid can be used for 110V 50 Hz,120V 60 Hz

⑨ 220-240V Solenoid can be used for 220-240V 50 Hz, 240V 60 Hz

⑩ Only for DC current

⑪ Current 50 Hz, Size III

⑮ 110-120V, 220-240V, DC can be supplied in Solenoid size II, III

⑯ Size II & III Only

⑰ Select Option FR for 50Hz and 60Hz

⑱ Full Rectified with Surge Suppressor provided in II, III, IV

VOLTAGE VARIATION (For Continuous Duty only)

Rated Voltage	Operating Voltage
6	4.8V to 7.2V
12	9.6V to 14.4V
24	19.2V to 28.8V
48	38.4V to 57.6V
110-120	88V to 132V
220-240	176V to 264V
256	192V to 280V
440	350V to 480V

ROTEX
Engineering For The Future

TERMINAL BOX SOLENOID TYPE : 16, 19

DIMENSION

SOLENOID TYPE : 16

CABLE ENTRY
Include drwg. with adopter
16 MS
16

CABLE ENTRY M20X1.5

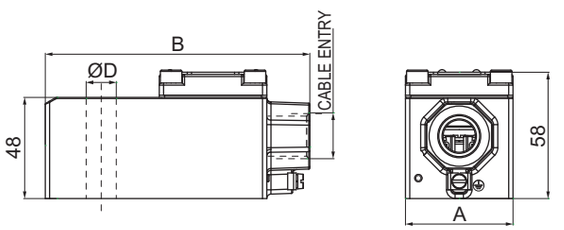

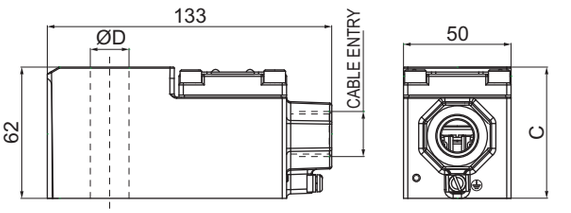

SIZE	A	B	ØD
I	42	116	14
III	50	124	14
III	50	124	13

SIZE	C	ØD
II	61	18
IV	51	14

CABLE ENTRY M20X1.5 & 1/2" NPT (With Adopter)

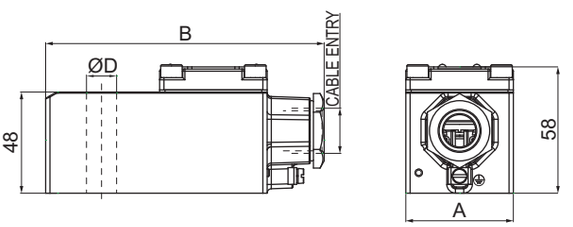

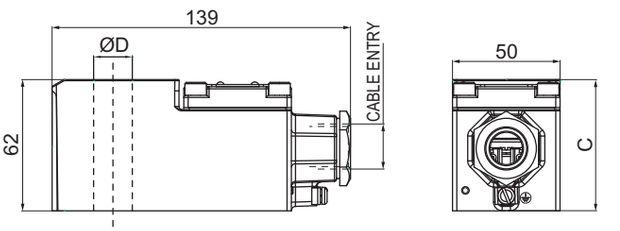

SIZE	A	B	ØE
I	42	122	14
III	50	130	14
III	50	130	13

SIZE	C	ØD
II	61	18
IV	51	14

OBSELETE PRODUCTS AND ITS INTERCHANGEABILITY

 Replace with Solenoid code 16 or 16MS along with Guide and Plunger assembly	 Solenoid Type 19 Replace with coil code 16MS			

Specifications are subject to change without notice

TERMINAL BOX (BCE) TYPE : 17

CIRCUIT DIAGRAM

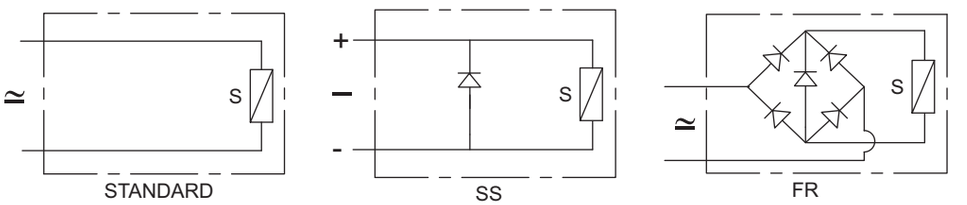

FEATURES

- Designed for extreme environmental condition
- Large terminals for easy connection
- Constructed for lowest temperature rise thus longer life
- 'O' Energiser for higher magnetic linkage
- Wider voltage variation
- Bottom Cable entry to avoid rain or process fluid entering into the termination area.
- For ease of operation and maintenance LED can be provided to confirm avalibility of voltage to the coil terminals
- UL Listed, file number E342217
- Dual gasket for better weather proof protection

UL CE

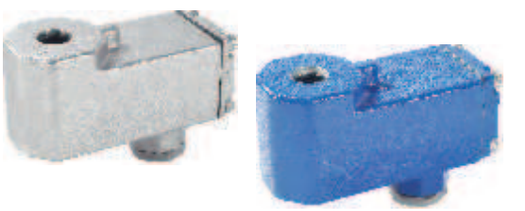

SPECIFICATION

Size	II - 18 mm, III - 13 mm, III & IV - 14 mm	
Voltage	6 V, 12 V, 24 V, 110 V, 120 V, 220 V, 256 V	
Current	50 Hz, 60 Hz, DC, 50/ 60 Hz/ DC	
Enclosure	**Cable Entry**	M25 X 1.5, Adopted to M20 X 1.5 or 1/2" NPT
	Material	Aluminum Cast colour Blue polyester powder coat, Stainless Steel Cast
Options	Surge Suppressor (SS), Fully Rectified (FR), Low Power (LW), Manual Reset (MR)	
Power	Refer to table "Power" on page 428E	
Insulation Class	Class H	
Weather Protection	Type 3, 35, 4, 4X, 6, 6P, IP67, IP68	
Approval	UL Listed, CE	
Voltage Variation	Refer to Voltage Variation table on page 428F	
Duty Cycle	100% (ED)	
Ambient Temprature	Power ≤ 20W, -60 °C to 100 °C, Power ≥ 20W, -60 °C to 75 °C	

WEIGHT IN kg

Size	Al/ kg	SS/ kg
II	0.9	1.6
III	0.8	1.4

APPLICATION



ROTEX
Engineering For The Future

TERMINAL BOX (BCE) TYPE : 17

POWER

Voltage	Solenoid		Power (VA)								
	Size	Core Dia	0.4②	1.8②	3.5	5	8	12	13	30	20
6	II	18					✓		▲		
	III	13	✓								
	III	14		✓	✓		▲				
	IV	14		✓							
12	II	18					✓		▲	✓	✓
	III	13	✓								
	III	14		✓	✓		▲				
	IV	14		✓							
24	II	18					✓		▲	✓	✓
	III	13	✓								
	III	14		✓	✓		▲				
	IV	14		✓							
48	II	18							▲		
	III	13					▲				
110-120	II	18					✓		▲	✓	✓
	III	13									
	III	14				✓	▲	▲			
	IV	14									
220-240	II	18					✓		▲	✓	✓
	III	14			✓		▲	▲			
	IV	14									
256②	II	18					✓		▲	✓	✓
	III	14					▲				
	IV	14									

▲ Standard
✓ Optional Available
② Only for DC Current

STANDARD POWER

Size	Current	Standard Power W, VA
I	AC	6, 12
	DC	8, 8
II	AC	13, 13
	DC	13, 13
III	AC	6, 12
	DC	8, 8

Specifications are subject to change without notice

TERMINAL BOX (BCE) TYPE : 17

SOLENOID ORDERING CODE

III-24V-DC-17-CO-SS-LD-LW5-H-02

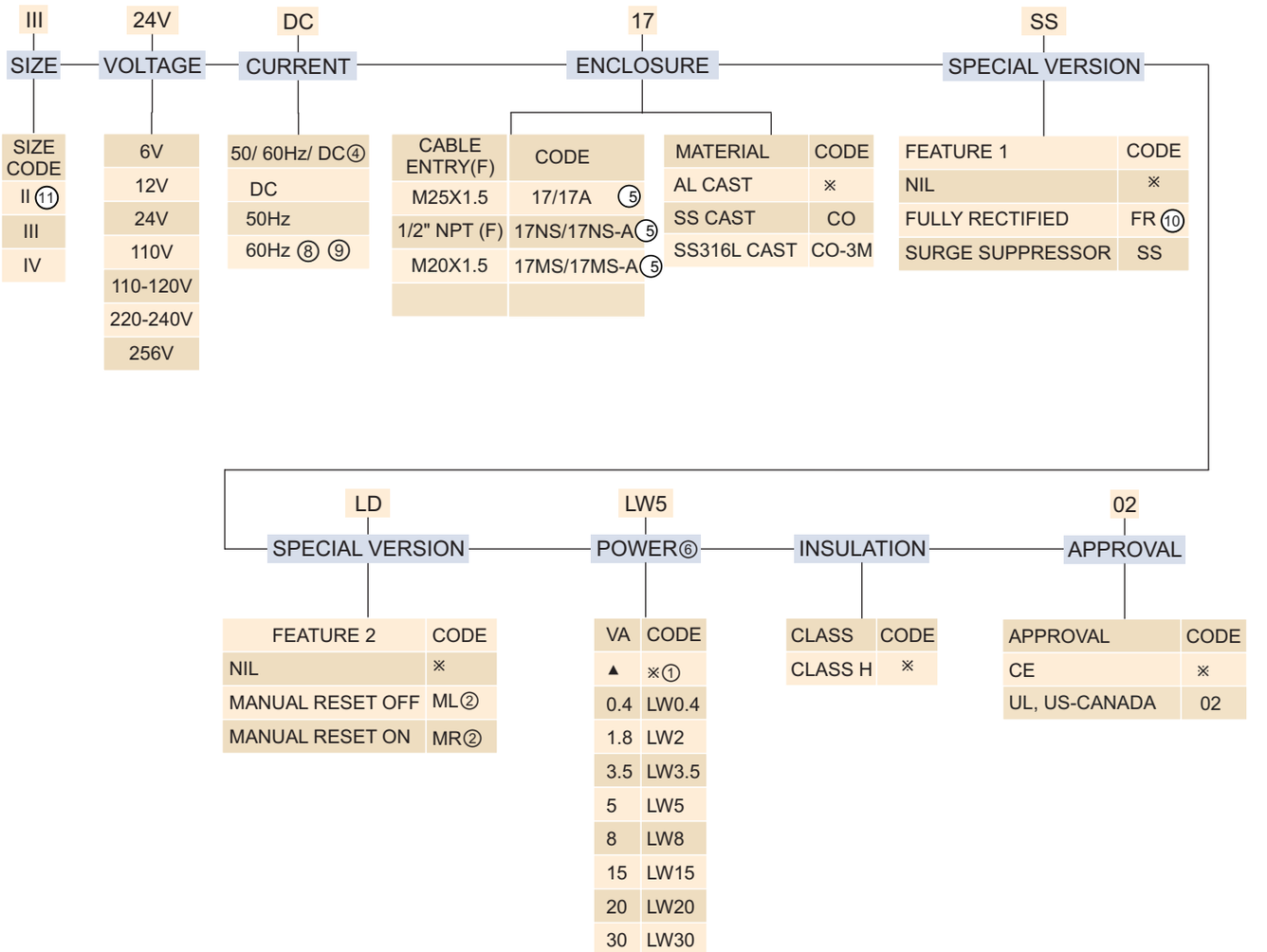

NOTE : ① Do not specify

② Available in size II and III select power standard voltage 24V, 110-120V, 220-240V

④ Select special version FR

⑤ IP68 Certified for 17A, 17NS-A, 17MS-A

⑥ Refer Power table on page 428E for size, Voltage and Power

⑧ 110-120V 50 Hz Solenoid can be used for 110V 50 Hz,120V 60 Hz

⑨ 220-240V Solenoid can be used for 220-240V 50 Hz, 240V 60 Hz

⑩ Full Rectified with Surge Suppressor provided in II, III, IV

⑪ Select Special Version FR for 50Hz and 60Hz.

VOLTAGE VARIATION (For Continuous Duty only)

Rated Volatge	Operating Voltage
6	4.8V to 7.2V
12	9.6V to 14.4V
24	19.2V to 28.8V
48	38.4V to 57.6V
110-120	88V to 132V
220-240	176V to 264V
256	192V to 280V

ROTEX
Engineering For The Future

TERMINAL BOX (BCE) TYPE : 17

MARKING

ROTEX AUTOMATION LIMITED
www.rotexautomation.com

c UL us TYPE
3, 3R, 3S, 4, 4X, 6 & 6P

MODEL : III-110-120V-50Hz-60Hz/DC-7-02-FR-LW5

SR. NO. : 15100100 - 07/14-081

Ambient Temperature
-60 °C to 100 °C POWER ≤ 20W
-60 °C to 70 °C > 20W POWER ≤ 30W

DUTY CYCLE : CONTINUOUS

DIMENSION SOLENOID TYPE : 17

WITH CABLE ENTRY M25X1.5

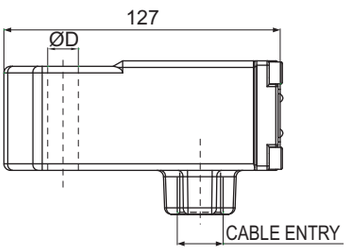

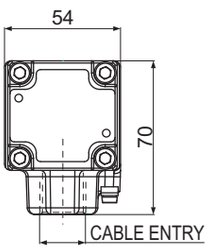

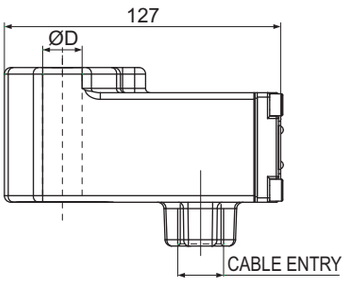

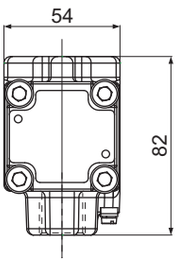

	ØD
III	13
III	14

	ØD
II	18
IV	14

CABLE ENTRY M20X1.5, 1/2" NPT(F) (With Adopter)

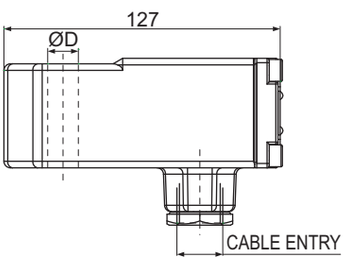

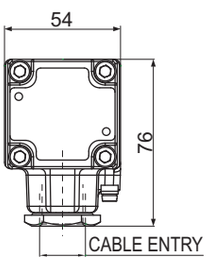

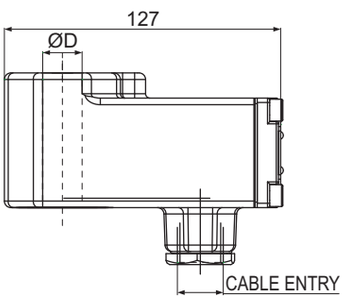

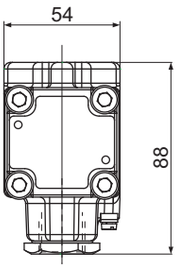

	ØD
III	13
III	14

	ØD
II	18
IV	14

OBSELETE PRODUCTS AND ITS INTERCHANGEABILITY

EXPLOSION PROOF SOLENOID TYPE : 37, 39 Ex d

CIRCUIT DIAGRAM

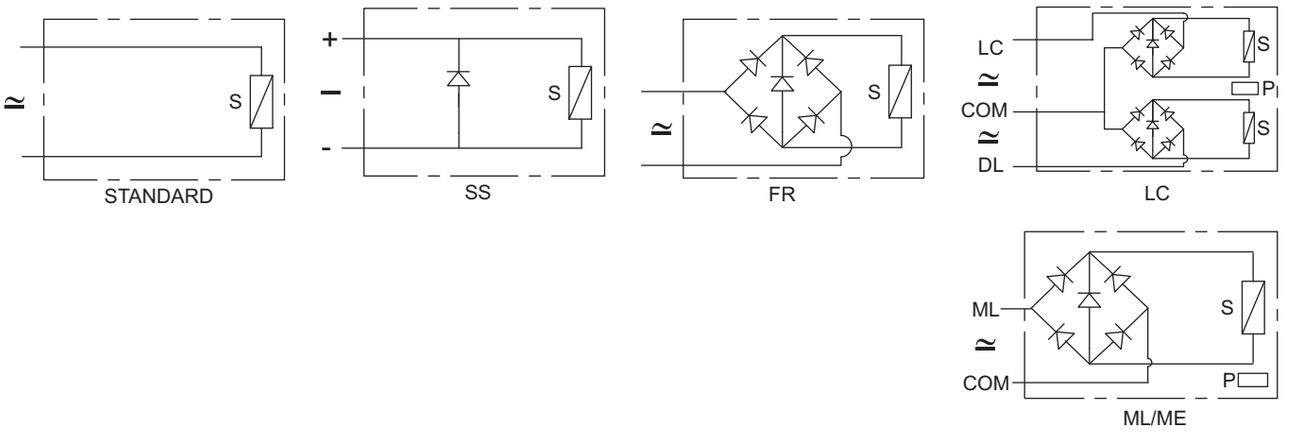

FEATURES

- Designed for extreme environmental condition
- With Integrated terminal box and Horizontal cable entry
- Large terminals for easy connections
- Constructed for lowest temperature rise thus longer life
- 'O' Energiser for higher magnetic linkage
- Wider voltage variation
- Surger Suppressor Provided
- Dual gasket



SPECIFICATION

Size	I- 14 mm, II- 18 mm, III- 13 mm, III & IV - 14 mm
Voltage	6 V, 12 V, 24 V, 48 V, 110 V, 120 V, 220 V, 256 V
Current	50 Hz, 60 Hz, DC, 50/ 60/ DC
Enclosure	**Cable Entry** M25X1.5, Adopted to M20X1.5 or 1/2" NPT ((INDIAN Approval) M20X1.5, 1/2" NPT (37-01, 39-01) (Other than INDIAN Approval) **Material** Aluminum Cast, Polyster Powder coat, Colour Red Stainless Steel Cast, Painted Optionally Grey Polyster Powder coat
Options	Corrosive Enviornment (CO), Manual Reset ON (MR ON), Manual Reset OFF (MR OFF), Low Power (LW), Latch (LC), Surge Suppressor(SS), Fully Rectified (FR)
Power	Refer to table "Power" on page 429A
Insulation Class	Class H
Weather Protection	IP66, IP67, IP67M (Refer marking on page 429C)
Approval	INDIAN, ATEX, CU-TR, INMETRO, CCOE, DGMS, SIL
Voltage Variation	Refer to Voltage Variation table on page 429B
Duty Cycle	100% (ED)
Ambient Temprature	Refer to Ambient temperature table on page 429C

WEIGHT IN kg

Size	Al	SS
I	0.5	1.2
II	0.8	1.7
III	0.6	1.4
IV	0.8	1.6

APPLICATION



ROTEX
Engineering For The Future

EXPLOSION PROOF SOLENOID TYPE : 37, 39 Ex d

POWER

Voltage	Solenoid		Power (VA)								
	Size	Core Dia	0.4②	1.8②	3.5	5	8	12	13	30	20
6	I	14					▲				
	II	18					✓		▲		
	III	13	✓								
	III	14		✓	✓		▲				
	IV	14		✓							
12	I	14		✓③			▲	▲			
	II	18					✓		▲	✓	✓
	III	13	✓								
	III	14		✓	✓		▲				
	IV	14		✓							
24	I	14		✓③			▲	▲			
	II	18					✓		▲	✓	✓
	III	13	✓								
	III	14		✓	✓	✓	▲				
	IV	14		✓							
48											
	II	18							▲	✓	✓
	III	14		✓	✓		▲				
110-120	I①	14				✓③		▲			
	II	18					✓		▲	✓	✓
	III	14			✓	✓	▲				
220-240	I ①	14						▲			
	II	18					✓		▲	✓	✓
	III	14				✓	▲				
256②	II	18					✓		▲	✓	✓
	III	14					▲				
440④	III	14						▲			

▲ Standard
✓ Optional Available

① Current 50 Hz or 60 Hz
② Only for DC Current
③ Should be Opted for 3/2 & 5/2 pilot operated valve
④ Current 50 Hz only

STANDARD POWER

Size	Current	Standard Power W, VA
I	AC	6, 12
	DC	8, 8
II	AC	13, 13
	DC	13, 13
III	AC	6, 12
	DC	8, 8

Specifications are subject to change without notice

EXPLOSION PROOF SOLENOID TYPE : 37, 39 Ex d

SOLENOID ORDERING CODE

III-24V-DC-37-CO-SS-LD-LW5-H

III	24V	DC	37	SS
SIZE	VOLTAGE	CURRENT	ENCLOSURE	SPECIAL VERSION

SIZE CODE
I③
II
III
IV

6V
12V
24V
48V
110-120V⑮
220-240V⑮
256V⑨
440V⑩

50Hz
60Hz⑧⑨
50/60Hz/DC④
DC⑮

CABLE ENTRY(F)	CODE
1/2" NPT	37 ⑯
M20X1.5	39 ⑯

MATERIAL	CODE
AL CAST, IP66	※①
SS CAST, IP66	CO
SS316L CAST, IP66	CO-3M

FEATURE 1	CODE
NIL	※①
SURGE SUPPRESSOR	SS
FULLY RECTIFIED	FR

LD	LW5	H	01
SPECIAL VERSION	POWER⑥	INSULATION	APPROVAL⑱

FEATURE 2	CODE
NIL	※①
MANUAL RESET OFF	ML②
MANUAL RESET ON	MR②
LED	LD ⑲
LATCH	LC ②

VA	CODE
▲	※①
0.4	LW0.4
1.8	LW1.8
3.5	LW3.5
5	LW5
8	LW8
15	LW15
20	LW20
30	LW30

CLASS	CODE
CLASS H	※①

APPROVAL	CODE
CCOE/PESO+BIS	※①
CE-ATEX	01
INDIA-ATEX	01B
INMETRO+ATEX	03
Cu-TR-EAC+ATEX	04
DGMS+CCOE/PESO+BIS	MN

NOTE : ① Do not specify

② Voltage 24, 110-120V, 220-240V current 50/ 60 Hz/ DC Power standard size II or III

③ Current 50/ 60 Hz/ DC & Special version FR can not be opted

④ Select special version FR

⑥ Refer Power table on page 429A

⑧ 110-120V 50 Hz Solenoid can be used for 110V 50Hz,120V 60Hz

⑨ 220-240V 50Hz Solenoid can be used for 240V 60Hz, 220-240V 50Hz

⑩ 50 Hz current, Size III only

⑮ Current DC size II, III

⑯ IP67 Certified by IS, CCOE/ PESO, D MS

⑱ Add SL for SIL capable certified coil

⑲ Size II & III Only

⑳ 1.8 Watt means LW1.8

VOLTAGE VARIATION (For Continuous Duty only)

Rated Voltage	Operating Voltage
6	4.8V to 7.2V
12	9.6V to 14.4V
24	19.2V to 28.8V
48	38.4V to 57.6V
110-120	88V to 132V
220-240	176V to 264V
256	205V to 280V
440	350V to 480V

APPROVAL

Approval	certifying Agencies	reference Number
INDIAN	CMRI	KLPL/Ex/R/12-007
	KLPL (Re-Validated)	CMRI/TC/P/H-1415
BIS INDIAN		7229976
CCOE/ PESO INDIAN		P-218046/1
DGMS INDIAN		230 of 2011
EUROPEAN/ ATEX	CESI, Italy	CESI 03 ATEX 344 Extension No. 01/12
INMETRO	CEPEL	CEPEL 08-1717X
CU-TR		RU C-IN.ГБ08.B.01100

ROTEX
Engineering For The Future

EXPLOSION PROOF SOLENOID TYPE : 37, 39 Ex d

MARKING

Marking	Ambient Temperature
ATEX	
II 2GD Ex d IIC T6 Gb Ex tb IIIC T80 °C Db IP66	- 40 °C ≤ Ta < 35 °C
II 2GD Ex d IIC T5 Gb Ex tb IIIC T95 °C Db IP66	- 40 °C ≤ Ta ≤ 50 °C
II 2GD Ex d IIC T4 Gb Ex tb IIIC T130 °C Db IP66	- 40 °C ≤ Ta ≤ 60 °C
INDIAN, CCOE/PESO, DGMS	Refer to Table for Ambient Temp.
Ex d IIC Tx IP67	- 20 °C ≤ Ta ≤ AA °C
INMETRO	
II 2GD Ex d IIC T6 Gb Ex tb IIIC T85 °C Db IP66	- 40 °C ≤ Ta < 35 °C
II 2GD Ex d IIC T5 Gb Ex tb IIIC T100 °C Db IP66	- 40 °C ≤ Ta ≤ 50 °C
II 2GD Ex d IIC T4 Gb Ex tb IIIC T135 °C Db IP66	- 40 °C ≤ Ta ≤ 60 °C
CU-TR	
1 Ex d IIC T6 Gb X/Ex tb IIIC T80 °C Db	- 40 °C to 35 °C
1 Ex d IIC T5 Gb X/Ex tb IIIC T95 °C Db	- 40 °C to 50 °C
1 Ex d IIC T4 Gb X/Ex tb IIIC T130 °C Db	- 40 °C to 60 °C

AMBIENT TEMPERATURE (INDIAN Approval)

SIZE	MAX. POWER	MAX. AMBIENT TEMP. °C		
		T6 (80)	T5 (95)	T4 (130)
I	5	65	70	-
	8	60	70	-
III	5	70	-	-
	8	60	70	-
	15	50	65	70
II	8	65	70	-
	10	60	70	-
	13	60	70	-
	20	55	70	-
	30	40	55	70
IV	5	70	-	-
	11	65	70	-

DIMENSION

SOLENOID TYPE : 37 & 39

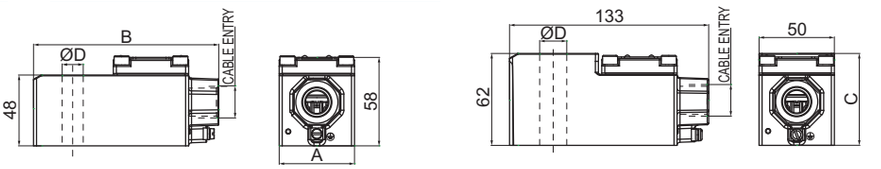

SIZE	A	B	ØD
I	42	116	14
III	50	124	14
III	50	124	13

COIL TYPE	CABLE ENTRY	APPROVAL INDIAN	OTHER THAN INDIAN
37	M25X1.5(F)	✓	
37	1/2"NPT(F)		✓
39	M20X1.5(F)		✓
37NS	1/2"NPT(F)	✓	
37MS	M20X1.5(F)	✓	

SIZE	C	ØD
II	61	18
IV	51	14

CABLE ENTRY M20X1.5, 1/2" NPT(F) (With Ex Adopter) (INDIAN Approval)

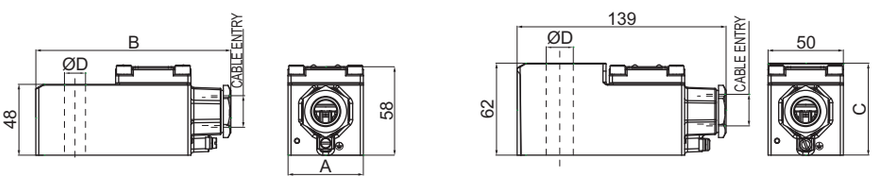

SIZE	A	B	ØD
I	42	122	14
III	50	130	14
III	50	130	13

COIL TYPE	CABLE ENTRY	APPROVAL INDIAN
37	1/2"NPT(F)	✓
39	M20X1.5(F)	✓
37MS	M20X1.5(F)	✓
37NS	1/2"NPT(F)	✓

SIZE	C	ØD
II	61	18
IV	51	14

OBSELETE PRODUCTS AND ITS INTERCHANGEABILITY

 Replace Solenoid code 37 or 37MS along with Guide & Plunger assembly	 Replace Solenoid code 37 or 37MS along with Guide & Plunger assembly	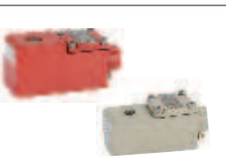 Solenoid code 39 replace with Solenoid code37MS		

Specifications are subject to change without notice

ROTEX
Engineering For The Future

EXPLOSION PROOF SOLENOID TYPE : 58 & 58-LT Ex emb

CIRCUIT DIAGRAM

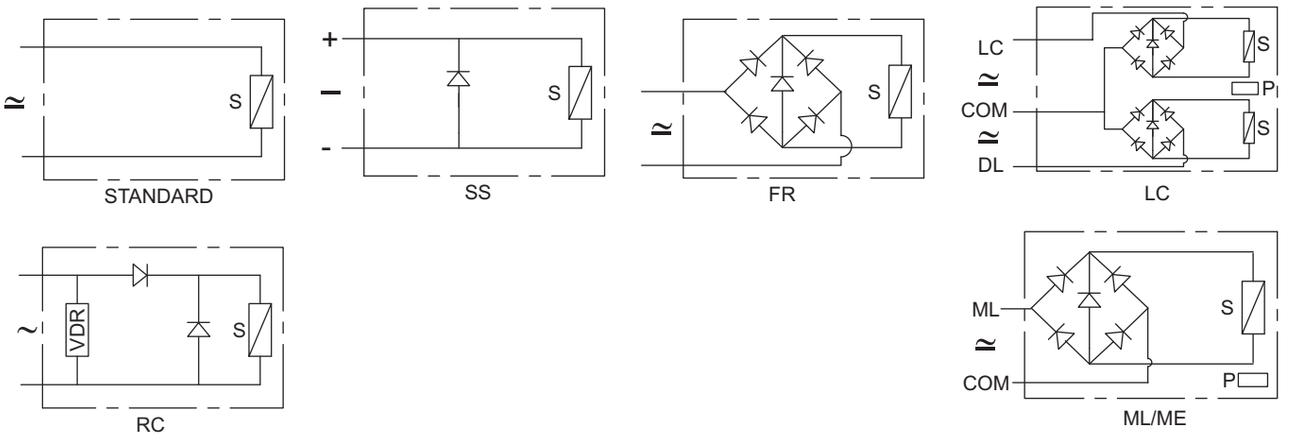

FEATURES

- Designed for extreme environmental condition
- Integrated terminal box having Horizontal cable entry
- Large terminals for easy connections
- Constructed for lowest temperature rise thus longer life
- 'O' Energiser for higher magnetic linkage
- Wider voltage variation
- Can in be installed zone 1, 2, 21, 22



SPECIFICATION

Size	I- 14 mm, II- 18 mm, III- 13 mm, III & IV - 14 mm
Voltage	6 V, 12 V, 24 V, 48 V, 110 V, 120 V, 230 V, 256 V
Current	50 Hz, 60 Hz, DC, 50-60Hz DC
Enclosure	**Cable Entry** M25X1.5, Adopted to M20X1.5 or 1/2" NPT **Material** Aluminum Cast, Polyster Powder coated, Colour Black Stainless Steel Cast
Options	Corrosive Enviornment (CO), Manual Reset ON (MR), Manual Reset, OFF (ML), Low Power (LW), Latch (LC), Surge Suppressor(SS), Fully Rectified (FR), Half Rectified (RC)
Power	Refer to table "Power" on page 430E
Insulation Class	Class H
Weather Protection	IP67
Approval	ATEX
Voltage Variation	Refer to Voltage Variation table on page 430F
Duty Cycle	100% (ED)
Ambient Temprature	-60 °C to 70 °C Refer to Marking table on page 430G

WEIGHT IN kg

Size	Al	SS
I	0.5	1.2
II	0.8	1.7
III	0.7	1.4
IV	0.8	1.6

APPLICATION



ROTEX
Engineering For The Future

EXPLOSION PROOF SOLENOID TYPE : 58 & 58-LT — Ex emb

POWER

Voltage	Solenoid		Power (VA)								
	Size	Core Dia	1.0②	1.8②	3.5	5	8	12	13	30	20
6 ②	I	14					▲				
	II	18							▲		
	III	13									
	III	14									
	IV	14									
12	I ⑤	14					▲				
	II	18							▲		
	III	13	✓③								
	III	14		✓③	✓						
	IV	14		✓							
24	I ⑤	14		✓③			▲	▲			
	II	18					✓		▲	✓	✓
	III	13	✓③								
	III	14		✓③	✓	✓	▲				
	IV	14		✓							
48											
	II	18							▲		
	III	14					▲				
110-120	I①⑤	14						▲			
	II	18					✓		▲	✓	✓
	III	14			✓	✓	▲				
220-240	I ①⑤	14						▲			
	II	18					✓		▲	✓	✓
	III	13									
	III	14				✓	▲				
256②	II	18							▲	✓	✓
	III	14					▲				

▲ Standard
✓ Optional Available

① Current 50 Hz or 60 Hz
② Only for DC Current
③ Should be Opted for 3/2 & 5/2 pilot operated valve
④ Current 50 Hz only
⑤ Current 50 Hz, 60Hz or DC

STANDARD POWER

Size	Current	Standard Power W, VA
I	AC	6, 12
	DC	8, 8
II	AC	13, 13
	DC	13, 13
III	AC	6, 12
	DC	8, 8

Specifications are subject to change without notice

EXPLOSION PROOF SOLENOID TYPE : 58 — Ex emb

SOLENOID ORDERING CODE

III-24V-DC-58-CO-SS-LD-LW5

III	24V	DC	58					SS		LD	LW5	H	
SIZE	VOLTAGE	CURRENT	ENCLOSURE					SPECIAL VERSION		SPECIAL VERSION	POWER⑥	INSULATION	APPROVAL⑯

SIZE

SIZE CODE
I③
II⑰
III
IV

VOLTAGE

6V
12V
48V
110-120V⑮
220-240V⑮
256V⑮

CURRENT

50Hz
60Hz⑧⑨
50/60Hz/DC④
DC⑮

ENCLOSURE

Ambient Temp.	MATERIAL	CODE
- 40 °C to 70 °C	AL CAST	58
	SS CAST	58-CO
- 60 °C to 70 °C	AL CAST	58LT
	SS CAST	58LT-CO

CABLE ENTRY(F)	CODE
M25X1.5	※ ①
1/2" NPT	NS
M20X1.5	MS

SPECIAL VERSION

FEATURE 1	CODE
SURGE SUPPRESSOR	※ ①
FULLY RECTIFIED	FR
HALF RECTIFIED	RC

SPECIAL VERSION

FEATURE 2	CODE
NIL	※ ①
MANUAL RESET OFF	ML ②
MANUAL RESET ON	MR ②
LED	LD
LATCH	LC ②

POWER⑥

VA	CODE
▲	※ ①
1.0	LW1
1.8	LW2
3.5	LW3.5
5	LW5
8	LW8
15	LW15
20	LW20
30	LW30

INSULATION

CLASS	CODE
CLASS H	※ ①

APPROVAL⑯

APPROVAL	CODE
CE-ATEX	01

NOTE : ① Do not specify

② Voltage 24, 110-120V, 220-240V current 50/ 60 Hz/ DC Power standard size II or III

③ Current 50 Hz/ 60 Hz or DC, Special version FR can not be opted

④ Select special version FR, Size II, III, IV

⑥ Refer Power table on page 430E

⑧ 110-120V 50 Hz Solenoid can be used for 110V 50 Hz,120V 60 Hz

⑨ 220-240V 50 Hz Solenoid can be used for 240V 60 Hz, 220-240V 50 Hz

⑮ Current DC size II, III, IV

⑯ Add SL for SIL capable certified coil

⑰ Select Special Version FR for 50Hz and 60Hz

VOLTAGE VARIATION (For Continuous Duty only)

Rated Voltage	Operating Voltage
6	4.8V to 7.2V
12	9.6V to 14.4V
24	19.2V to 28.8V
48	38.4V to 57.6V
110-120	88V to 132V
220-240	176V to 264V
256	205V to 280V

APPROVAL

Approval	Certifying Agencies	Reference Number
EUROPEAN/ ATEX	TEKNIKA INSPECIA, a.s.	1408X

ROTEX
Engineering For The Future

EXPLOSION PROOF SOLENOID TYPE : 58 Ex emb

MARKING

SOLENOID TYPE 58

Size III 15W Coil
EX e mb IIC T6 - T4 Gb IP67
Ex tb IIIC T6 - T4 °C Db IP67
-40 °C ≤ Ta ≤ 50 °C for T6
-40 °C ≤ Ta ≤ 65 °C for T5
-40 °C ≤ Ta ≤ 70 °C for T4

Size III 5W Coil
EX e mb IIC T6 Gb IP67
Ex tb IIIC T6 °C Db IP67
-40 °C ≤ Ta ≤ 70 °C for T6

Size III 8W, Size II 10W Size I 8W, Size II 13W
EX e mb IIC T6 - T5 Gb IP67
Ex tb IIIC T6 - T5 °C Db IP67
-40 °C ≤ Ta ≤ 60 °C for T6
-40 °C ≤ Ta ≤ 70 °C for T5

Size II 20W Coil
EX e mb IIC T6 - T5 Gb IP67
Ex tb IIIC T6 - T5 °C Db IP67
-40 °C ≤ Ta ≤ 55 °C for T6
-40 °C ≤ Ta ≤ 70 °C for T5

Size II 8W, Size I 5W, Size IV 11W
EX e mb IIC T6 - T5 Gb IP67
Ex tb IIIC T6 - T5 °C Db IP67
-40 °C ≤ Ta ≤ 60 °C for T6
-40 °C ≤ Ta ≤ 70 °C for T5

Size II 30W Coil
Ex e mb IIC T6 - T4 Gb IP67
Ex tb IIIC T6 - T4 °C Db IP67
-40 °C ≤ Ta ≤ 40 °C for T6
-40 °C ≤ Ta ≤ 55 °C for T5
-40 °C ≤ Ta ≤ 70 °C for T4

SOLENOID TYPE 58-LT

Size III 15W Coil
EX e mb IIC T6 - T4 Gb IP67
Ex tb IIIC T6 - T4 °C Db IP67
-60 °C ≤ Ta ≤ 50 °C for T6
-60 °C ≤ Ta ≤ 65 °C for T5
-60 °C ≤ Ta ≤ 70 °C for T4

Size III 5W Coil
EX e mb IIC T6 Gb IP67
Ex tb IIIC T6 °C Db IP67
-60 °C ≤ Ta ≤ 70 °C for T6

Size III 8W, Size II 10W Size I 8W, Size II 13W
EX e mb IIC T6 - T5 Gb IP67
Ex tb IIIC T6 - T5 °C Db IP67
-60 °C ≤ Ta ≤ 60 °C for T6
-60 °C ≤ Ta ≤ 70 °C for T5

Size II 20W Coil
EX e mb IIC T6 - T5 Gb IP67
Ex tb IIIC T6 - T5 °C Db IP67
-60 °C ≤ Ta ≤ 55 °C for T6
-60 °C ≤ Ta ≤ 70 °C for T5

Size II 8W, Size I 5W, Size IV 11W
EX e mb IIC T6 - T5 Gb IP67
Ex tb IIIC T6 - T5 °C Db IP67
-60 °C ≤ Ta ≤ 60 °C for T6
-60 °C ≤ Ta ≤ 70 °C for T5

Size II 30W Coil
Ex e mb IIC T6 - T4 Gb IP67
Ex tb IIIC T6 - T4 °C Db IP67
-60 °C ≤ Ta ≤ 40 °C for T6
-60 °C ≤ Ta ≤ 55 °C for T5
-60 °C ≤ Ta ≤ 70 °C for T4

DIMENSION SOLENOID TYPE : 58, 58-LT

SIZE	A	B	ØD
I	42	116	14
III	51	124	14

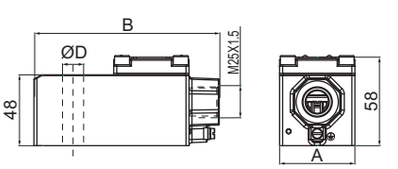

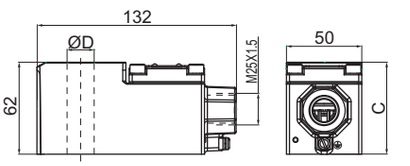

SIZE	C	ØD
II	58	18
IV	58	14

CABLE ENTRY M20X1.5, 1/2" NPT(F) (With Adopter)

SIZE	A	B	ØD
I	42	122	14
III	51	130	14

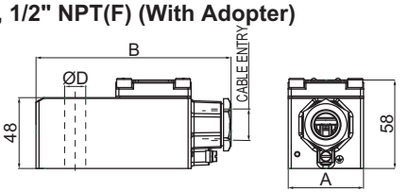

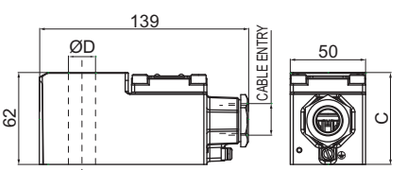

SIZE	C	ØD
II	58	18
IV	58	14

Specifications are subject to change without notice

EXPLOSION PROOF JUNCTION BOX SOLENOID (BCE) TYPE : 87 Ex d

CIRCUIT DIAGRAM

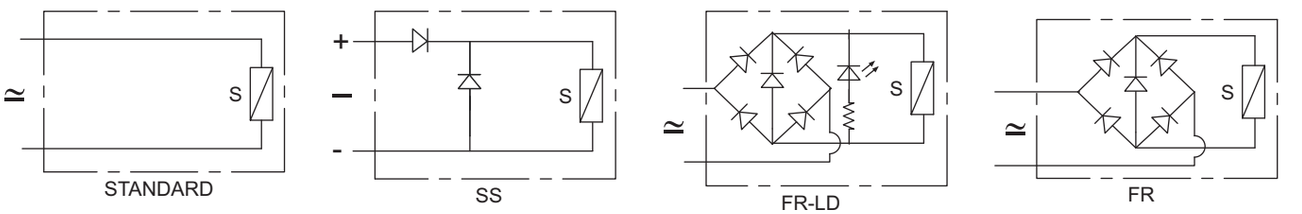

FEATURES

- Designed for extreme environmental condition
- Large terminals for easy connections
- Constructed for lowest temperature rise thus longer life
- 'O' Energiser for higher magnetic linkage
- Wider voltage variation
- Bottom Cable entry to avoid rain or process fluid entering into the termination area.
- For ease of operation and maintenance LED can be provided to confirm avalibility of voltage to the Solenoid terminals
- Dual gasket

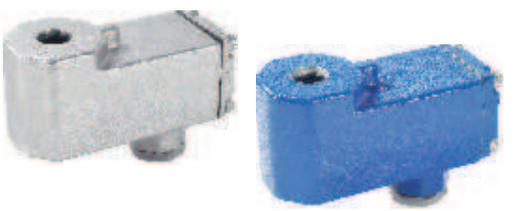

SPECIFICATION

Size	II - 18 mm, III - 14 mm, IV - 14 mm	
Voltage	6 V, 12 V, 24 V, 48 V, 110 V, 120 V, 220 V, 256 V	
Current	50 Hz, 60 Hz, DC, 50 Hz/ 60 Hz/ DC	
Enclosure	**Cable Entry**	M25 X 1.5, Adopted to M20 X 1.5 or 1/2" NPT
	Material	Aluminum Cast, Polyester Powder Coat, Colour Blue Stainless Steel Cast
Options	Surge Suppressor (SS), Fully Rectified (FR), LED (LD), Low Power (LW), Menual Reset (MR)	
Power	Refer to table "Power" on page 431A	
Insulation Class	Class H	
Weather Protection	IP67, IP67 M Optionally IP68	
Approval	INDIAN, ATEX, CU-TR, IECEx, CCOE, DGMS ①, SIL	
Voltage Variation	Refer to Voltage Variation table on page 431B	
Duty Cycle	100% (ED)	
Ambient Temprature	Refer to Ambient temperature table on page 429C	

① DGMS applied for

WEIGHT IN kg

Size	Al	SS
II	0.9	1.6
III	0.8	1.4
IV	0.9	1.6

APPLICATION



ROTEX
Engineering For The Future

EXPLOSION PROOF JUNCTION BOX SOLENOID (BCE) TYPE : 87 Ex d

POWER

Voltage	Solenoid		Power (VA)								
	Size	Core Dia	0.4②	1.8②	3.5	5	8	12	13	30	20
6	II	18					✓		▲		
	III	13	✓								
	III	14		✓	✓	✓	▲				
	IV	14		✓							
12	II	18					✓		▲	✓	✓
	III	13	✓								
	III	14		✓	✓	✓	▲	▲			
	IV	14		✓							
24	II	18					✓		▲	✓	✓
	III	13	✓								
	III	14		✓	✓	✓	▲	▲			
	IV	14		✓							
48	II	18							▲	✓	✓
	III	13									
	III	14		✓	✓	✓	▲	▲			
	IV	14									
110-120	II	18					✓		▲	✓	✓
	III	14				✓	▲	▲			
220-240	II	18					✓		▲	✓	✓
	III	14				✓	▲	▲			
256②	II	18					✓		▲	✓	✓
	III	14					▲				
	IV	14									

▲ Standard
✓ Optional Available
② Only for DC Current
③ Should be Opted for 3/2 & 5/2 pilot operated valves

STANDARD POWER

Size	Current	Standard Power W, VA
I	AC	6, 12
	DC	8, 8
II	AC	13, 13
	DC	13, 13
III	AC	6, 12
	DC	8, 8

Specifications are subject to change without notice

ROTEX
Engineering For The Future

EXPLOSION PROOF JUNCTION BOX SOLENOID (BCE) TYPE : 87 Ex d

SOLENOID ORDERING CODE

III-24V-DC-87-CO-SS-LD-LWS-H-07

III — SIZE — 24V — VOLTAGE — DC — CURRENT — 87 — ENCLOSURE — SS — SPECIAL VERSION

SIZE CODE
II ⑩
III
IV

VOLTAGE
6V
12V
24V
48V
110V
120V⑧
220V⑨
256V

CURRENT
50Hz
60Hz⑦⑧
50/60 Hz/DC④
DC

CABLE ENTRY(F)	CODE
M25X1.5	87
1/2" NPT (F)	87NS
M20X1.5	87MS

MATERIAL	CODE
AL CAST, IP67/ IP67 M	※①
SS CAST, IP67/ IP67 M	CO
SS316L CAST, IP67	CO-3M

FEATURE 1	CODE
SURGE SUPPRESSOR	SS ※①
FULLY RECTIFIED	FR⑤

LD — SPECIAL VERSION — LW5 — POWER⑥ — INSULATION — 07 — APPROVAL

FEATURE 2	CODE
NIL	※①
LATCH	LC②
MANUAL RESET OFF	ML②
MANUAL RESET ON	MR②
LED	LD

VA	CODE
▲	※①
0.4	LW0.4
1.8	LW2
3.5	LW3.5
5	LW5
8	LW8
15	LW15
20	LW20
30	LW30

CLASS	CODE
CLASS H	※①

APPROVAL	CODE
CCOE/PESO+BIS	※①
IEC Ex+ATEX	01
INMETRO+ATEX	03
Cu-TR-EAC+ATEX	04
DGMS+CCOE/PESO+BIS	MN

NOTE : ① Do not specify
② Voltage 24V, 110-120V, 220-240V current 50-60 Hz/ DC power standard size II or II
④ Select Special Version FR
⑤ Solenoid suitable for 50 Hz/ 60 Hz/ DC current, Select special version FR
⑥ Refer Power table on page 430A
⑧ 110-120V 50 Hz Solenoid can be used for 110V 50 Hz,120V 60 Hz
⑨ 220-240V Solenoid can be used for 220-240V 50 Hz, 240V 60 Hz
⑩ Select Special Version FR for 50Hz and 60Hz

VOLTAGE VARIATION (For Continuous Duty only)

Rated Volatge	Operating Voltage
6	4.8V to 7.2V
12	9.6V to 14.4V
24	19.2V to 28.8V
48	38.4V to 57.6V
110-120	88V to 132V
220-240	176V to 264V
256	192V to 280V

ROTEX
Engineering For The Future

EXPLOSION PROOF JUNCTION BOX SOLENOID (BCE) TYPE : 87 Ex d

MARKING

Temperature Class	Ambient
ATEX, IECEx	
II 2GD Ex d IIC T6 Gb Ex tb IIIC T80 °C Db IP67	- 60 °C < Ta < XX °C
II 2GD Ex d IIC T5 Gb Ex tb IIIC T95 °C Db IP67	- 60 °C < Ta < XX °C
II 2GD Ex d IIC T4 Gb Ex tb IIIC T130 °C Db IP67	- 60 °C < Ta < XXX °C
II 2GD Ex d IIC T3 Gb Ex tb IIIC T155 °C Db IP67	- 60 °C < Ta < XXX °C
INDIAN, DGMS, CCOE	
Ex d IIC T6 Gb Ex tb IIIC T80 °C Db IP67/ IP67 M/IP68	- 60 °C < Ta < XX °C
Ex d IIC T5 Gb Ex tb IIIC T95 °C Db IP67/ IP67 M/IP68	- 60 °C < Ta < XX °C
Ex d IIC T4 Gb Ex tb IIIC T130 °C Db IP67/ IP67 M/IP68	- 60 °C < Ta < XXX °C
Ex d IIC T3 Gb Ex tb IIIC T155 °C Db IP67/ IP67 M/IP68	- 60 °C < Ta < XXX °C
CU-TR	
Ex d IIC T6 IP67 Ex tb IIIC T80 °C Db IP67	- 60 °C < Ta < 70 °C
Ex d IIC T5 IP67 Ex tb IIIC T95 °C Db IP67	- 60 °C < Ta < 70 °C
Ex d IIC T4 IP67 Ex tb IIIC T130 °C Db IP67	- 60 °C < Ta < 100 °C
Ex d IIC T3 IP67 Ex tb IIIC T155 °C Db IP67	- 60 °C < Ta < 100 °C

AMBIENT TEMPERATURE

SIZE	MAX. POWER	MAX. AMBIENT TEMPERATURE °C			
		T6	T5	T4	T3
III	5	65	80	100	
	8	60	75	100	
	15	50	65	100	
II	8	65	80	100	
	13	60	75	100	
	20		45	80	100
	30			60	70
IV	5	70	85	100	
	11	65	80	100	

e.g. (1) Solenoid Size III, Power 8W
ATEX approval II2 GD Ex d IIC T6 Gb Ex t IIC T80 Db IP67
-60 °C ≤ Ta ≤ 60 °C

(2) Solenoid Size II, Power 30W
as per INDIAN approval
Ex d IIC T3 Gb
Ex t IIC T155 Db IP67
-60 °C ≤ Ta ≤ 70 °C

Specifications are subject to change without notice

ROTEX
Engineering For The Future

EXPLOSION PROOF JUNCTION BOX SOLENOID (BCE) TYPE : 87 Ex d

APPROVAL

Approval	certifying Agencies	reference Number
INDIAN	KLPL	
BIS		7229976
CCOE/ PESO		
DGMS		
ATEX	DNV	DNV 12 ATEX 112883X
IECEx	DNV	IECEx, DNV 13.0006X
CU-TR		RU C-IN. ГБ08.B.01100

DIMENSION SOLENOID TYPE : 87

CABLE ENTRY M25X1.5

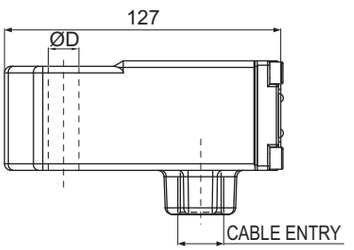

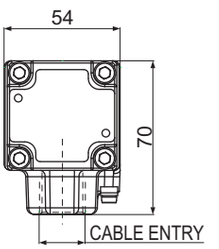

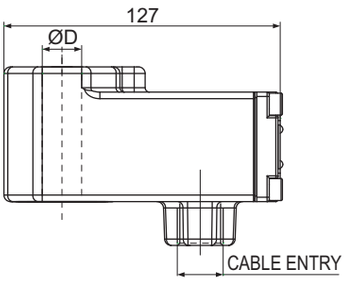

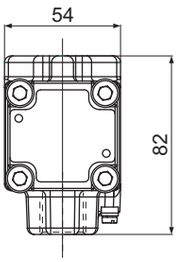

	ØD
III	13
III	14

	ØD
II	18
IV	14

CABLE ENTRY M20X1.5, 1/2" NPT(F) (With Adopter)

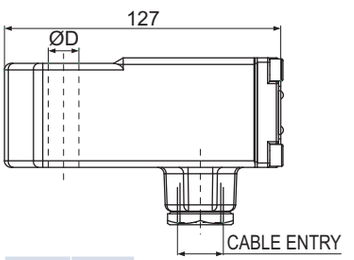

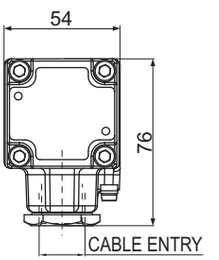

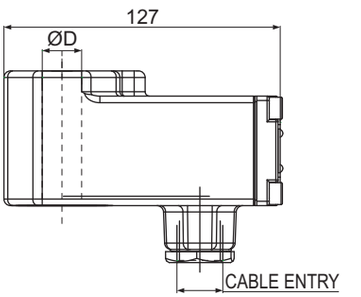

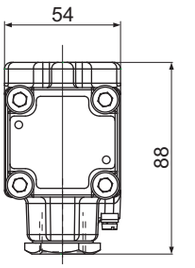

	ØD
III	13
III	14

	ØD
II	18
IV	14

OBSELETE PRODUCTS AND ITS INTERCHANGEABILITY

 Replace Solenoid code 87NS or 87MS along with Guide and Plunger assembly	 Replace Solenoid code 87 or 87MS along with Guide and Plunger assembly	 Solenoid code 39 replace with Solenoid code 87MS		

ROTEX
Engineering For The Future

INTRINSICALLY SAFE SOLENOID Ex ia

BARRIER SELECTION

LEGAL CRITERIA

To meet requirement of installing Valves with Intrinsically safe Solenoid in the hazardous location of zone 0,zone 1, or zone 2, Power to the Intrinsically Safe Solenoid has to be supplied through certified Barrier Zener Diode, Solenoid Driver, Remote I/O (Power Source).

For meeting safety, it is essential to select and match entity parameter of Barrier (Power Source) as well as Field Device (Solenoid Valve) being installed in the hazardous environment. Uo, Io, Po, Co, Lo are the Entity Parameters of the Power Source

Ui, Ii, Pi, Ci, Li are the Entity Parameters of the Field Device Ui (Voltage), Ii (Current), Pi (Power), of the solenoid (Field Device) should be more than Uo (Voltage), Io (Current), Po (Power), of the Power Source. i.e. (Ui ≥ Uo, Ii ≥ Io, Pi ≥ Po)

Ci (Capacitance), Li (Inductance) of the field device and Cc (Capacitance), Lc (Inductance) of the Cable should be less than Co (Capacitance), Lo (Inductance) of the Power Source
i.e.(Ci + Cc ≤ Co Li + Lc ≤ Lo)

FUNCTIONAL CRITERIA

Barrier Data

Output Volt @ Zero Current (V_{B0}) : _____ Volt
Output Volt @ Maximum Current (V_{BM}) : _____ Volt
Maximum Output Current (I_B) : _____ mA

Solenoid Data

Minimum Operating Volt (V_C) : _____ Volt
Minimum Operating Current (I_C) : _____ mA

Permissible Cable Length (CL)

Resistance Based

Resistance Based
Maximum Allowable Cable Resistance (R_C) Ohm
$Rc = [V_{B0} – ((V_{B0}-V_{BM}) * I_C / I_B)] * 1000/ I_C$
Allowable Maximum Cable Length (CL_R)should have Resistance ≤ R_C

Capacitance Based

Allowable Capacitance of the Barrier (C_O)
Cable Capacitance (C_C)
Coil Capacitance (C_i) : $C_C = 0$ (for ROTEX IS Solenoid)
$C_O \geq C_C + C_i$
Allowable Maximum Cable Length (CL_C) should have Capacitance ≤ C_O

Inductance Based

Allowable Inductance of the Barrier (L_B)
Cable Inductance (L_C)
Solenoid Inductance (L_S) : $L_S = 0$ (for ROTEX IS Solenoid)
$L_O \geq L_C + L_i$

Allowable Maximum Cable Length (CL_L) should have Inductance ≤ L_O

CL should be minimum of CL_R, CL_C, CL_L

CL should be minimum of CL_R, CL_C, CL_L

Specifications are subject to change without notice

ROTEX
Engineering For The Future

INTRINSICALLY SAFE SOLENOID WITH CIRCUIT TYPE : 62, 66, 63, 64 Ex ia

CIRCUIT DIAGRAM

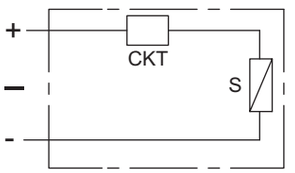



Type : 63, 64

FEATURES

- Designed for extreme environmental conditions
- Large terminals for easy connections
- Bottom Cable entry to avoid rain or process fluids entering into the termination area
- Can be adopted for any valve with core tube 14mm

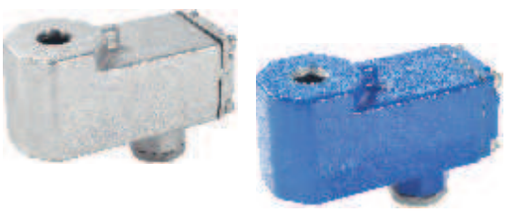

Type : 62, 66

SPECIFICATION

Size	III, IV	
Voltage	24 V	
Current	DC	
Enclosure	**Cable Entry**	M25 X 1.5, Adopted to M20 X 1.5 or 1/2" NPT
	Material	Aluminum Cast, Polyester Powder Coat, Colour Blue Stainless Steel Cast
Options	LED (LD)	
Power	Refer entity & minimum operating parameter on page 432A	
Insulation Class	Class H	
Weather Protection	IP67	
Approval	INDIAN, ATEX, CU-TR, IECEx, CCOE, DGMS ①	
Duty Cycle	100% (ED)	
Ambient Temperature	Refer to marking on page 432C	

① DGMS applied for

WEIGHT IN kg

Type	Al	SS
II	0.9	1.6
III	0.8	1.4
IV	0.9	1.6

APPLICATION



INDOOR OUTDOOR

ROTEX
Engineering For The Future

INTRINSICALLY SAFE SOLENOID WITH CIRCUIT TYPE : 62, 66, 63, 64 Ex ia

MINIMUM OPERATING PARAMETER

Operating Parameter	IS Coil with circuit (Size-III) Coil Type : 66	IS Coil with circuit (Size-IV) Coil Type : 62	IS Coil with cut & LED Type : 66 LD	IS Coil with circuit Type : 62 LD
Minimum Voltage	10 Volt	12.5 Volt	10 Volt	14 Volt
Minimum Current	20mA	25.5mA	21 mA	28.5 mA
Minimum Power	0.20 Watt	0.3 Watt	0.21 Watt	0.4 Watt
LED	No	No	Yes	Yes
Valve Type	2XXXX, 3XXXX, 4XXXX 5XXXX, 3XXX, VB (Except 30308, 30334, 30138 & 30318 etc.)	30318LW & P3017	2XXXX, 3XXXX, 4XXXX 5XXXX, 3XXX, VB (Except 30308, 30334, 30138 & 30318 etc.)	30318LW & P3017

ENTITY PARAMETER

Entity Parameter	
Ui	32V DC
Ii	230mA
Pi	2.3W
Ci	0
Li	0

RESPONSE ON TIME

Voltage	10	11	12	14	18	22	24	26	30	32
Current mA	20	22	24	28.5	37	45.5	49.7	54	63	67
Delay Time in Mili Sec.	4800	3800	2500	1600	850	650	450	400	250	250

RESPONSE OFF TIME

10mS to 20mS

Specifications are subject to change without notice

ROTEX
Engineering For The Future

INTRINSICALLY SAFE SOLENOID WITH CIRCUIT TYPE : 62, 66 Ex ia

SOLENOID ORDERING CODE

III-24V-DC-66-CO-MS-07

III — SIZE | CODE | 24V — VOLTAGE | DC — CURRENT | 66 CO — ENCLOSURE | INSULATION | 07 — APPROVAL

SIZE	CODE	24V	DC
III	66		
	66LD①		

CABLE ENTRY(F)	CODE
M25X1.5	66/ 66LD
1/2" NPT	66NS/ 66LDNS
M20X1.5	66MS/ 66LDMS

MATERIAL	CODE
AL CAST, IP67	※
SS CAST, IP67	CO
SS316L CAST, IP67	CO-3M

CLASS	CODE
CLASS H	※

APPROVAL	CODE
CCOE/PESO+BIS	※
IEC Ex+ATEX	01
INMETRO+ATEX	03
Cu-TR-EAC+ATEX	04
DGMS+CCOE/PESO+BIS	MN

IV-24V DC-62-CO-05

IV — SIZE | CODE | 24V — VOLTAGE | DC — CURRENT | 62 CO — ENCLOSURE | INSULATION | 05 — APPROVAL

SIZE	CODE	24V	DC
IV	62		
	62LD①		

CABLE ENTRY(F)	CODE
M25X1.5	62/ 62LD
1/2" NPT (F)	62NS/ 62LD NS
M20X1.5	62MS/ 62LD MS

MATERIAL	CODE
AL CAST, IP67	※
SS CAST, IP67	CO
SS316L CAST, IP67	CO-3M

CLASS	CODE
CLASS H	※

APPROVAL	CODE
CCOE/PESO+BIS	※
IEC Ex+ATEX	01
INMETRO+ATEX	03
Cu-TR-EAC+ATEX	04
DGMS+CCOE/PESO+BIS	MN

Note : ① 66LD & 62LD Provided with LED can be supplied with INDIAN, CCOE/ PESO, DGMS approval

② Approval INDIAN/CCOE/PESO/DGMS only

③ Surge Suppressor Provided

APPROVAL

Solenoid Type : 62, 66

Approval	Certifying Agencies	Reference Number
INDIAN	KLPL	KLPL/Ex/13-022X
	NA	
DGMS	DGMS	232 of 2011
BIS		7560881
CCOE/ PESO	PESO	
EUROPEAN/ ATEX	Baseefa	Baseefa 12 ATEX 0243X
CU-TR		RU C- IN.ГБ08.B.01100
INMETRO		
IECEx	Baseefa	IECEx BAS 12.0128XIssu1

MARKING

ATEX & IECEx	AMBIENT TEMPERATURE
Ex I M I Ex ia II Ma	- 60 °C ≤ Ta ≤ +75 °C
Ex II 1G Ex ia IIC T5 Ga	- 60 °C ≤ Ta ≤ +75 °C
Ex II 1G Ex ia IIC T6 Ga	- 60 °C ≤ Ta ≤ +60 °C
Ex II 1D Ex ia IIIC T200 125 °C IP67Da	- 60 °C ≤ Ta ≤ +75 °C
INDIAN, PESO/ CCOE, DGMS	(FOR COIL TYPE 63)
Ex ia I/IIC T5, IP67	- 40 °C ≤ Ta ≤ +75 °C
Ex ia I/IIC T6, IP67	- 40 °C ≤ Ta ≤ +60 °C
CU-TR	
Ex ia I or	- 60 °C ≤ Ta ≤ 75 °C
Ex ia IIC T5 Ga	- 60 °C ≤ Ta ≤ 75 °C
Ex ia IIC T6 Ga	- 60 °C ≤ Ta ≤ 60 °C
Ex ia IIIC T_{200} 125 °C Da	

* Only for SS cast enclosure

ROTEX
Engineering For The Future

INTRINSICALLY SAFE SOLENOID WITH CIRCUIT TYPE : 62, 66, 63, 64 Ex ia

DIMENSION SOLENOID TYPE : 62, 66

CABLE ENTRY M25X1.5

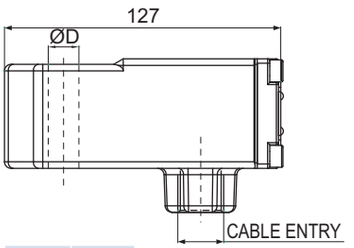

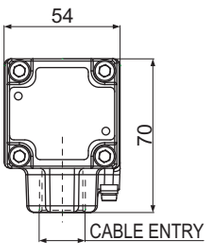

	ØD
III	13
III	14

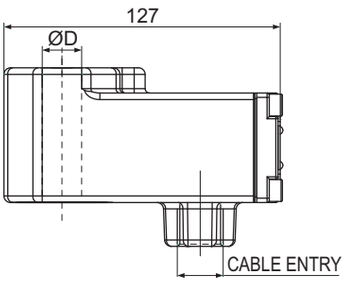

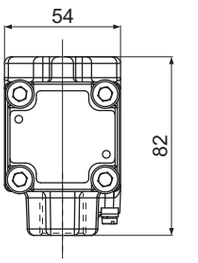

	ØD
II	18
IV	14

CABLE ENTRY M20X1.5, 1/2" NPT (With Adopter)

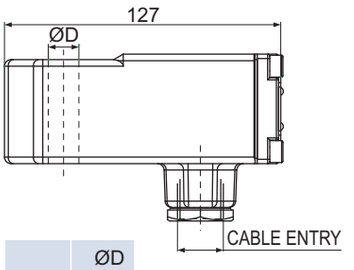

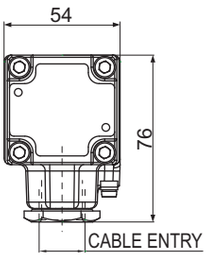

	ØD
III	13
III	14

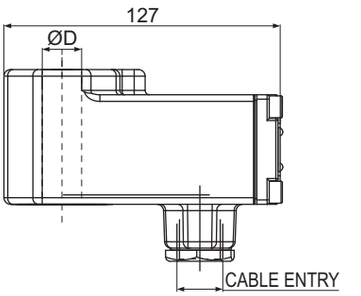

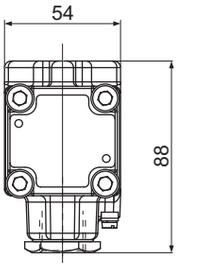

	ØD
II	18
IV	14

OBSELETE PRODUCTS AND ITS INTERCHANGEABILITY

Replace with Solenoid type 66 along with Guide and pressure assembly	Type : 63, 64, 63-01, 64-01  Replace with Solenoid Type 66			

Specifications are subject to change without notice

LOW POWER INTRINSICALLY SAFE SOLENOID TYPE : 65 CR Ex ia

CIRCUIT DIAGRAM

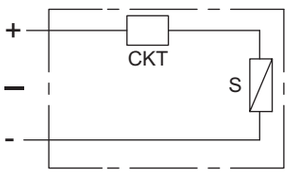



FEATURES

- Designed for extreme environmental conditions
- 'O' Energiser for higher magnetic linkage
- DIN Plug provided

SPECIFICATION

Size	III - 13 mm	
Voltage	24 V	
Current	DC	
Enclosure	**Cable Entry**	Pg-9, DINPLUG AS PER DIN 43650A
	Material	Steel chrome plated
Insulation Class	Class H	
Weather Protection	IP67	
Approval	INDIAN, CCOE, DGMS①, GOST R	
Duty Cycle	100% (ED)	

① DGMS applied for

ENTITY PARAMETER

Entity Parameter	
Ui	32V DC
Ii	230mA
Pi	2.3W
Ci	0
Li	0

WEIGHT IN kg

Type	Al/ kg	SS
III	0.37	

APPLICATION



ROTEX
Engineering For The Future

LOW POWER INTRINSICALLY SAFE SOLENOID TYPE : 65 CR Ex ia

SOLENOID ORDERING CODE

III-24V-DC-65CR

III	24V	DC	65CR	1	H
SIZE	VOLTAGE	CURRENT	ENCLOSURE	APPROVAL	INSULATION

SIZE
III

24V

DC

CABLE ENTRY	CODE
PG-9	65CR

APPROVAL	CODE
INDIAN	※
PESO/ CCOE	PE
DGMS, CCOE	MN
GOST R	04
INMETRO	03

CLASS	CODE
CLASS H	※

SOLENOID MARKING

Aluminium, Cast	Satinless Steel, Cast
INDIAN	
Ex ia I/ IIC T5, IP67	- 40 °C ≤ Ta ≤ 75 °C
IEx ia I/ IIC T6 IP67	- 40 °C ≤ Ta ≤ 60 °C

Note : ① Surge Suppressor Provided

MARKING

GOST R	
1Ex (ia) dIIC T6	- 40 °C to +70 °C

MINIMUM OPERATING PARAMETER

Valve Code I3XXX & I5XXX	Max. Pressure 11bar
Minimum Voltage	14V
Minimum Current	25mA
Minimum Power	0.35W
Valve Code I3XXXEP & I5XXXEP	Max. Pressure 14bar
Response ON	50 ms
Response OFF	30 ms

APPROVAL

Approval	Certifying Agencies	Reference Number
INDIAN	KLPL	KLPL/Ex/13-022X
BIS		7560881
CCOE/ PESO*		
DGMS		231 of 2011
GOST R	CIS	РОСС IN.ГБ06.B01292
INMETRO	CEPEL	CEPEL08.1718

DIMENSION

SOLENOID TYPE : 65 CR

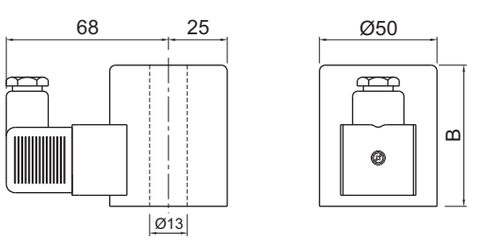

SIZE	B	ØC
III	56	13

Specifications are subject to change without notice

LOW POWER INTRINSICALLY SAFE SOLENOID TYPE : 67, 71 Ex ia

CIRCUIT DIAGRAM

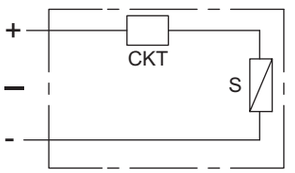

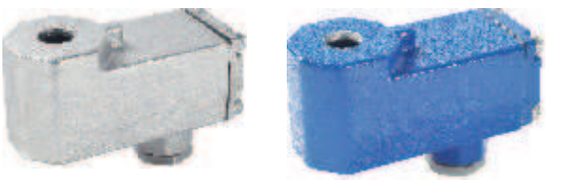

TYPE 71



TYPE 67

FEATURES

- Designed for extreme environmental conditions
- Large terminals for easy connections
- Constructed for lowest temperature rise thus longer life
- 'O' Energiser for higher magnetic linkage
- Wider voltage variation

SPECIFICATION

Size	III - 13 mm, IV - 14 mm	
Voltage	24 V	
Current	DC	
Enclosure	**Horizontal Cable Entry**	Type 67
	Bottom Cable Entry	Type 71
Cable Entry	M25 X 1.5, Adopted to M20 X 1.5 or 1/2" NPT	
Approval	INDIAN, ATEX, CU-TR, CCOE, DGMS ①, IECEx	
Ambient Temperature	-60 °C to 70 °C	

WEIGHT IN kg

TYPE 67

Size	Al/ kg	SS/ kg
III	0.6	1.4
IV	0.8	1.6

TYPE 71

Size	Al/ kg	SS/ kg
III	0.8	1.4
IV	0.9	1.6

APPLICATION



INDOOR OUTDOOR

ROTEX
Engineering For The Future

LOW POWER INTRINSICALLY SAFE SOLENOID TYPE : 67, 71 Ex ia

SOLENOID ORDERING CODE

III-24V-DC-67

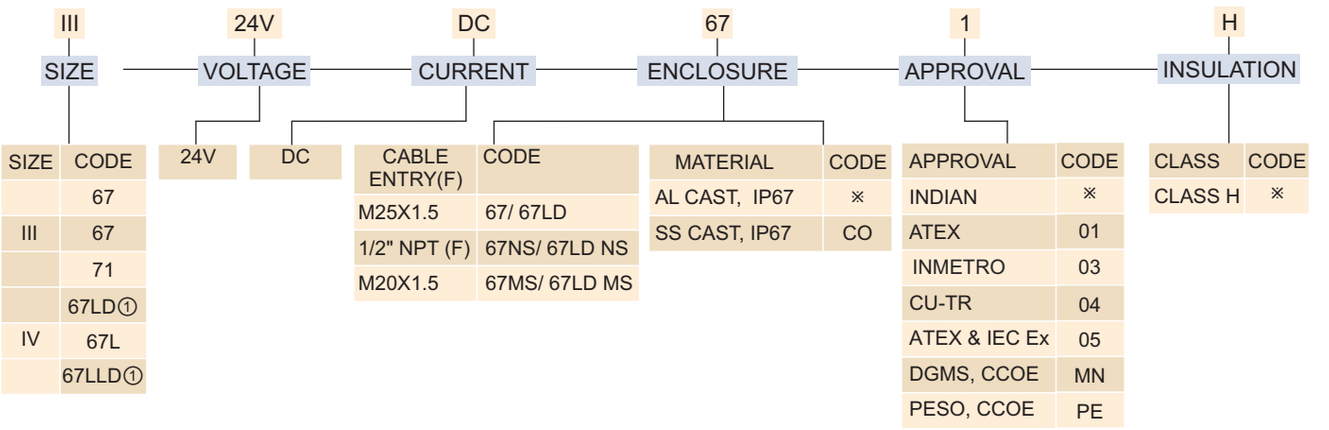

SIZE	CODE
	67
III	67
	71
	67LD①
IV	67L
	67LLD①

24V	DC

CABLE ENTRY(F)	CODE
M25X1.5	67/ 67LD
1/2" NPT (F)	67NS/ 67LD NS
M20X1.5	67MS/ 67LD MS

MATERIAL	CODE
AL CAST, IP67	※
SS CAST, IP67	CO

APPROVAL	CODE
INDIAN	※
ATEX	01
INMETRO	03
CU-TR	04
ATEX & IEC Ex	05
DGMS, CCOE	MN
PESO, CCOE	PE

CLASS	CODE
CLASS H	※

IV-24V-DC-71-05

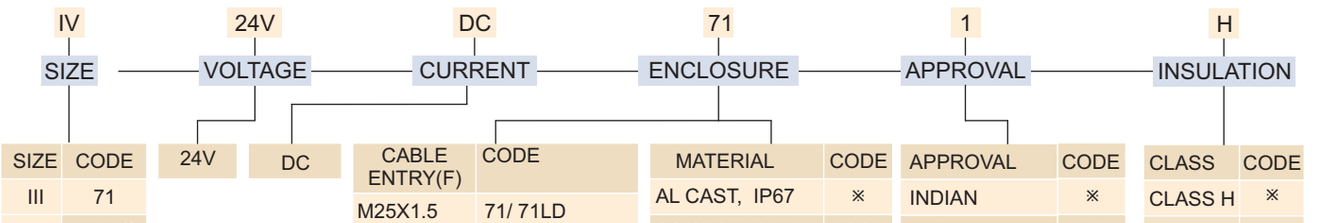

SIZE	CODE
III	71
	71LD①
	71L
IV	71LLD①

24V	DC

CABLE ENTRY(F)	CODE
M25X1.5	71/ 71LD
1/2" NPT (F)	71NS/ 71LD NS
M20X1.5	71MS/ 71LD MS
3/4" NPT (F)	71NL/ 71LD NL

MATERIAL	CODE
AL CAST, IP67	※
SS CAST, IP67	CO

APPROVAL	CODE
INDIAN	※
ATEX	01
INMETRO	03
CU-TR	04
PESO/ CCOE	PE
ATEX & IEC Ex	05

CLASS	CODE
CLASS H	※

Note : ① 67LD, 71LD, 67LLD, 71LLD Supplied with LED (Mention 'LD' Code) and can be supplied with INDIAN, CCOE/PESO, DGMS approval

② Surge Suppressor Provided

APPROVAL

Type : 67

Approval	Certifying Agencies	Reference Number
INDIAN	CMRI CIMFR	CMRI/TC/SR/H-834
	KLPL ()Revalidated	KLPL/Ex/13-022X
BIS		7560881
CCOE/ PESO		
DGMS	DGMS	231 of 2011
INMETRO	CEPL	CEPL 08.1718
CU-TR		RU C- IN.ГБ08.B.01100
ATEX	Baseefa	Baseefa12ATEX0243X
IECEx	Baseefa	IECEx BAS 12.0128X

Type : 71

Approval	Certifying Agencies	Reference Number
INDIAN	KLPL Revalidated	KLPL/Ex/13-022X
BIS		7560881
CCOE/ PESO*		
DGMS*		
CU-TR		RU C- IN.ГБ08.B.01100
ATEX	Baseefa	Baseefa12ATEX0243X
IECEx	Baseefa	IECEx BAS 12.0128X

Specifications are subject to change without notice

1

ROTEX
Engineering For The Future

LOW POWER INTRINSICALLY SAFE SOLENOID TYPE : 67, 71 Ex ia

ENTITY PARAMETER

Entity Parameter	
Ui	32V
Ii	230mA
Pi	2.3W
Ci	0
Li	0

MINIMUM OPERATING PARAMETER

Operating Parameter	VALVE TYPE I3XXX & I5XXX, Pressure Maximum 11 kg/ cm2				VALVE TYPE I3XXXEP & I5XXXEP Pressure Maximum 8 kg/ cm2			
	Solenoid Code				Solenoid Code			
	67	67LD	67L	67LLD	67	67LD	67L	67LLD
Minimum Voltage	14V	15V	CONTACT ROTEX		11V	11V	CONTACT ROTEX	
Minimum Current	25mA	28mA			19mA	22mA		
Minimum Power	0.35W	0.42W			0.21W	0.24W		
LED	NO	YES	NO	YES	NO	YES	NO	YES
Response ON	60 ms							
Response OFF	40 ms							

Operating Parameter	VALVE TYPE I3XXX & I5XXX, Pressure Maximum 11 kg/ cm2				VALVE TYPE I3XXXEP & I5XXXEP Pressure Maximum 8 kg/ cm2			
	Solenoid Code				Solenoid Code			
	71	71LD	71L	71LLD	71	71LD	71L	71LLD
Minimum Voltage	14V	14V	CONTACT ROTEX		11V	11V	CONTACT ROTEX	
Minimum Current	25mA	28mA			19mA	22mA		
Minimum Power	0.35W	0.42W			0.21W	0.24W		
LED	NO	YES	NO	YES	NO	YES	NO	YES
Response ON	60 ms							
Response OFF	40 ms							

MARKING

Solenoid Type : 67, 67LD

	Ambient Temperature
ATEX & IECEx	
I M1 Ex ia II Ma*	- 60 °C ≤ Ta ≤ 75 °C
II 1G Ex ia IIC T5 Ga	- 60 °C ≤ Ta ≤ 75 °C
II 1G Ex ia IIC T6 Ga	- 60 °C ≤ Ta ≤ 60 °C
II 1D Ex ia IIIC T200 125 °C Da IP67	- 60 °C ≤ Ta ≤ 75 °C
INDIAN, DGMS,CCOE/ PESO	
Ex ia IIC T5 Ga	- 60 °C ≤ Ta ≤ 75 °C
Ex ia IIC T6 Ga	- 60 °C ≤ Ta ≤ 60 °C
CU-TR	
Exia I	- 60 °C to +75 °C
Ex ia IIC T5	- 60 °C to +75 °C
Ex ia IIC T6	- 60 °C to +75 °C
Ex ia IIIC T200 125 °C Da IP67	- 60 °C ≤ Ta ≤ 75 °C

* Only for SS cast enclosure

Solenoid Type : 71, 71LD

	Ambient Temperature
ATEX & IECEx	
I M1 Ex ia II Ma*	- 60 °C ≤ Ta ≤ 75 °C
II 1G Ex ia IIC T5 Ga	- 60 °C ≤ Ta ≤75 °C
II 1G Ex ia IIC T6 Ga	- 60 °C ≤ Ta ≤ 60 °C
II 1D Ex ia IIIC T200 125 °C Da IP67	- 60 °C ≤ Ta ≤ 75 °C
INDIAN, DGMS,CCOE/ PESO	
Ex ia IIC T5 Ga	- 60 °C ≤ Ta ≤ 75 °C
Ex ia IIC T6 Ga	- 60 °C ≤ Ta ≤ 60 °C
CU-TR	
Exia I	- 60 °C to +75 °C
Ex ia IIC T5	- 60 °C to +75 °C
Ex ia IIC T6	- 60 °C to +75 °C
Ex ia IIIC T200 125 °C Da IP67	- 60 °C ≤ Ta ≤ 75 °C

* Only for SS cast enclosure

ROTEX
Engineering For The Future

LOW POWER INTRINSICALLY SAFE SOLENOID TYPE : 67, 71 Ex ia

DIMENSION SOLENOID TYPE : 71

CABLE ENTRY M25X1.5

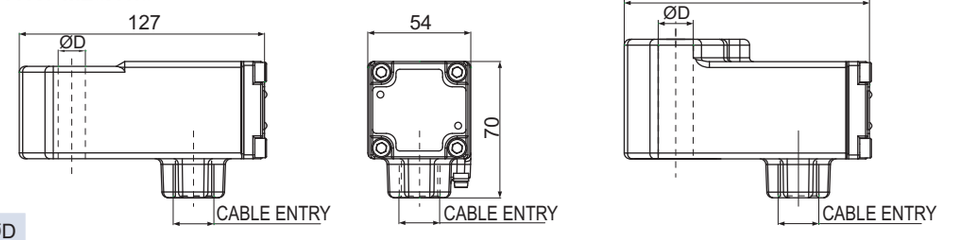

	ØD
III	13
III	14

	ØD
II	18
IV	14

CABLE ENTRY M20X1.5, 1/2" NPT (With Adopter) **SOLENOID TYPE : 71**

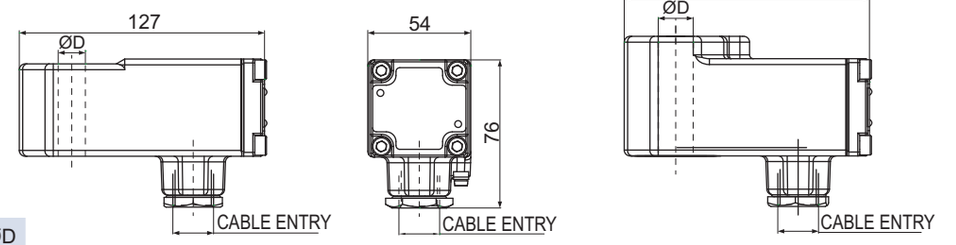

	ØD
III	13
III	14

	ØD
II	18
IV	14

CABLE ENTRY M20X1.5 **SOLENOID TYPE : 67**

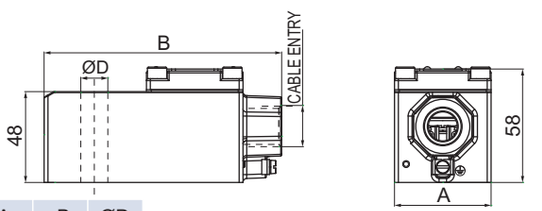

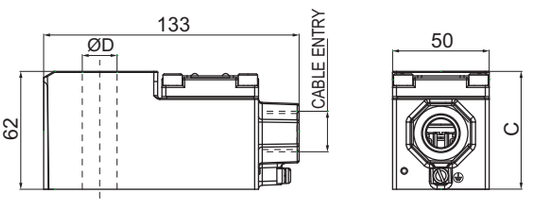

SIZE	A	B	ØD
I	42	116	14
III	50	124	14
III	50	124	13

SIZE	C	ØD
II	61	18
IV	51	14

CABLE ENTRY M20X1.5 & 1/2" NPT (With Adopter)

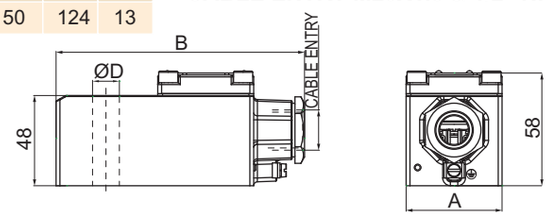

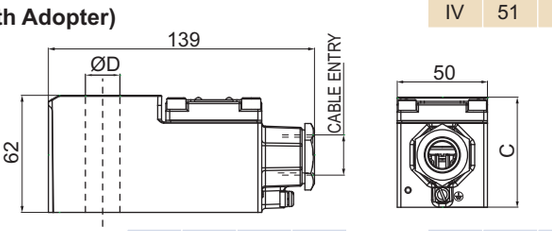

SIZE	A	B	ØE
I	42	122	14
III	50	130	14
III	50	130	13

SIZE	C	ØD
II	61	18
IV	51	14

OBSELETE PRODUCTS AND ITS INTERCHANGEABILITY

	 Coil Type 72 & 73 is been Replaced by 67 & 71			

Specifications are subject to change without notice

SELECTION GUIDE : BARRIER/ REMOTE I/O

BARRIER	INTRINSICALLY SAFE COIL	
	LOW POWER	WITH CIRCUIT
MTL		
MTL 3021	✓	✓
MTL 3022	✓	✓
MTL 4021	✓	✓
MTL 4021S	✓	✓
MTL 4023	✓	✓
MTL 4024	✓	✓
MTL 4025	✓	✓
MTL 5021	✓	✓
MTL 5022	✓	✓
MTL 5023	✓	✓
MTL 5024	✓	✓
MTL 5025	✓	✓
PEPPLER AND FUCHS		
KFDO-SD2-Ex 1.1045		
KFDO-SD2-Ex1.1045		
KFD2-SL2-Ex1.B		
KFD2-SL2-Ex1.B		
KFD2-SD-Ex 1.48	✓	✓
KFD2-SD-Ex 1.48.90A	✓	✓
KFD2-SD-Ex 1.17	✓	✓
KFD2-SL-Ex 1.48	✓	✓
KFD2-SL-Ex 1.48.90A	✓	✓
KFD2-VD-Ex 1.1560	✓	✓
KFD2-VD-Ex 1.1835	✓	✓
KFD2-VM-Ex 1.35L	✓	✓
KFD2-SL2-Ex 1	✓	✓
KFD2-SL2-Ex 1.B	✓	✓
KFD2-SL2-Ex 1.LK		
KFD2-SL2-Ex 2	✓	✓
KFD2-BO-Ex	✓	✓
KFD2-BO-Ex 2.2	✓	✓
TRUCK		
MK72-S09-Ex 0/24VDC	✓	✓
MK72-S12-Ex 0/24VDC	✓	✓
MK72-S13-Ex 0/24VDC	✓	✓
MK72-S14-Ex 0/24VDC	✓	✓
MK72-S15-Ex 0/24VDC		
MK72-S16-Ex 0/24VDC	✓	✓
MK72-S17-Ex 0/24VDC	✓	✓
MK72-S18-Ex 0/24VDC	✓	✓
MK72-S19-Ex 0/24VDC	✓	✓
MK72-S20-Ex 0/24VDC	✓	✓
MK72-S21-Ex 0/24VDC	✓	✓
MK72-S22-Ex 0/24VDC	✓	✓
MK72-S10-Ex 0/24VDC	✓	✓

REMOTE I/O	INTRINSICALLY SAFE COIL	
	LOW POWER	WITH CIRCUIT
STAHL		
9475/12-04-11	✓	✓
9475/12-04-21	✓	✓
9475/22-04-21	✓	✓
9475/12-04-31	✓	✓
9475/12-08-51	✓	✓
9475/22-08-51	✓	✓
9475/12-08-61	✓	✓
9475/22-08-61	✓	✓
TRUCK		
DO 40 Ex	✓	✓
AI 40 Ex	✓	✓
AO 40 Ex	✓	✓
AOH 40 Ex	✓	✓
SIEMENS		
6ES7132-7RD00-0ABO	✓	✓
6ES7132-7RD10-0ABO	✓	✓
6ES7132-7RD20-0ABO	✓	✓
PEPPERL+FUCHS		
FB 2201 B	✓	✓
FB 2202 B	✓	✓
FB 2203 B	✓	✓
FB 2204 B	✓	✓
FB 2204 D	✓	✓
FB 2205 B	✓	✓
FB 2212 B	✓	✓
FB 2212 D	✓	✓
FB 2213 B	✓	✓
FB 2213 D	✓	✓
FB 6210 B	✓	✓
FB 6211 B	✓	✓
FB 6212 B	✓	✓
FB 6213 B	✓	✓
FB 6214 B	✓	✓
FB 6215 B	✓	✓
LB 6110 A	✓	✓
LB 6111 A	✓	✓
LB 6112 A	✓	✓
LB 6113 A	✓	✓
LB 6114 A	✓	✓
LB 6115 A	✓	✓
PR ELECTRONICS		
9203B1	✓	✓
9203B2	✓	✓

CONTACT ROTEX IN CASE IF YOU INTEND TO USE BARRIER OTHER THAN ONE LISTED ABOVE

Specifications are subject to change without notice

SPECIAL VALVES



HOT AIR GATE/ FUEL VALVE OPERATION FOR BOILER

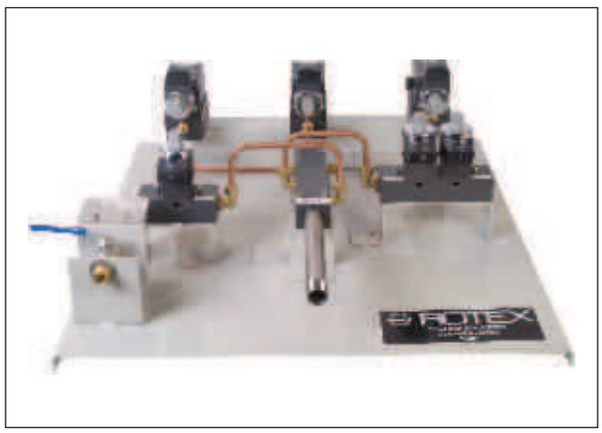

UNLOADER PANEL



CONTROL FOR BOILER

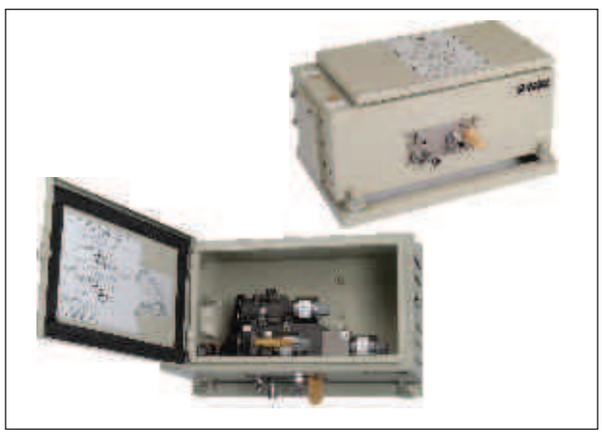

ANTI COLLISION DEVICE (SAFETY ITEM FOR CONTROLLING BRAKES OF LOCOMOTIVE)



VALVES FOR NUCLEAR POWER PLANT

Specifications are subject to change without notice

SPECIAL VALVES



VACUUM CIRCUIT BREAKER



AUTOMOBILE
(HVAC)



SHUT DOWN VALVE
(NUCLEAR PLANT)



RAILWAY PASSENGER COACH



HOT AIR GATE
OPERATION IN BOILER
HOUSE OF THERMAL POWER PLANT



4\2 DIRECT ACTING VALVE 250 bar
(NUCLEAR PLANT)



BRAKE OPERATION



SHUT OFF VALVE FOR CORROSIVE/
INTRAVENOUS FLUID



LPG SHUT OFF VALVE

ROTEX
Engineering For The Future

SPECIAL VALVES



STEEL PLANT



HOT FLUE GAS (300 °C)
ANALYSER VALVE



DUAL FLOW VALVE



AUTOMOBILE HVAC



HIGH PRESSURE HIGH
TEMPERATURE FLUID ANALYSER



CNG DISPENSING



HIGH PRESSURE VALVE



LINE BREAK VALVE



TORQUE LIMITING VALVE

Specifications are subject to change without notice

SPECIAL VALVES



VACUUM CIRCUIT BREAKER VALVE



AUTOMOBILE
FUEL CUT OFF VALVE



VACUUM RELEASE VALVE



HIGH PRESSURE 400 bar SUB BASE
MOUNTED VALVE



DRESSER NUT TYPE PIPE
MOUNTED PULSE VALVE



HIGH PRESSURE
HAND OPERATED 3/2 VALVE



GANG MOUNTED 3/2 VALVE



5/3 DIRECT ACTING VALVE



WATER FILLING

ROTEX
Engineering For The Future

SPECIAL VALVES



3/2 SUB BASE MOUNTED VALVE



GANG MOUNTED 3/2,5/2 VALVE



HAND, SWITCH, PUSH BUTTON OPERATED VALVE



PNEUMATIC/ ELECTRO PNEUMATIC, POSITIONER



STAINLESS STEEL BODY PULSE JET VALVE



PNEUMATIC CYLINDER Ø 32 - Ø 160



LPG, WATER, FUEL DISPENSING VALVE



PETROL, DIESEL DISPENSING VALVE WITH Ex m SOLENOID LED



FLANGED END ANGLE SEAT VALVE

Specifications are subject to change without notice

ADDITIONAL CATALOGUES

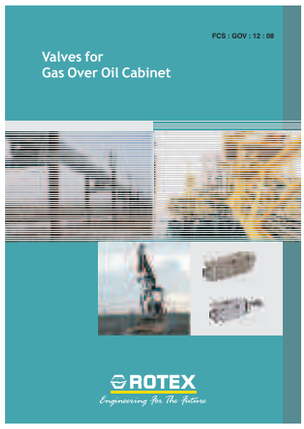

GAS OVER OIL



ANGLE SEAT VALVE



MAGNET VALVE FOR RAILWAY



ACTUATOR
HIGH TORQUE



ROTARY ACTUATOR ECF



LIMITSWITCH/ POSITIONER BOX



POSITIONER

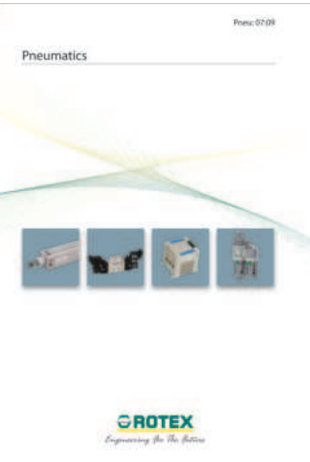

PNEUMATIC

ROTEX
Engineering For The Future

ORDERING REQUIREMENT : NEW VALVE/ APPLICATION

If you do not find what you need in this catalogue, please contact ROTEX with following information:
(Please fill in as much as possible information available with you, enabling us to quote / supply the most suitable and economical product).

VALVE

Type of Valve	:	Direct Acting/ Internal Pilot Operated/ External Pilot Operated
Valve Configuration	:	2/2, 3/2, 4/2, 5/2 or 5/3
Function	:	Normally Closed (NC)/ Normally Open (NO)/ Mixing/ Diverting/ Universal/ Bi-functional/ Impulse Type/ Center Off/ Center Exhaust /Center Pressurized/ Latched/ Redundant/ Pinch Valve
Connection	:	1/8", 1/4", 3/8", 1/2", 3/4", 1", 11/4", 11/2", 2", 21/2", 3" BSP or NPT or Flanged or other (Please specify) SUB BASE MOUNTED/ CNOMO/ NAMUR
Media	:	Air/ Water/ Liquid/ Gases/ Nitrogen/ Oxygen/ Diesel/ Furnace Oil/ CNG/ Neptha or any other (Please Specify)._____ *C
Media Temperature	:	
Seals	:	NBR, EPDM, Viton, NEOPRENE, PTFE, SILICON, SAPPHIRE, POLYURETHENE, HYPOLAN OR OTHERS **The seat material will be generally selected by ROTEX depending upon media, media pressure and media temperature.**
Orifice	:	____mm, Flow Factor: kv ____ or Cv____
Flow Required	:	____ l/ min Line Pressure :_____ bar ____ Nm3/hr. Allowable Pressure Drop :_____ bar
[If used for Cylinder	:	Bore Dia____ mm, Stroke: ___ mm, Speed: ___ Cycle/ min/ ___cm/ sec]
Body Material	:	Surface Treated Aluminum, Brass, SS or any other (Please Specify)
Internals	:	Std/ Stainless Steel
Manual Override	:	NIL/ Push Button/ Locking Arrangement/ Screw Driver/ Lever
Media Pressure	:	Minimum Operating Pressure: ___ bar Maximum Operating Pressure___ bar
Environment/ Ambient	:	Dusty, Hot (___*C), Dry, Wet, Corrosive, Explosion Risk, Weatherproof, Protection IP55, IP65, IP67, IP68 any other (Please specify)

Provide following information only when AIR OPERATED Valve or EXTERNAL PILOT OPERATED Valve is selected.

External Fluid : Media _____ Minimum Pressure_____ bar,
Maximum Pressure_____ bar

Specifications are subject to change without notice

ORDERING REQUIREMENT : NEW VALVE/ APPLICATION

SOLENOID

- Voltage : _____ Volt, Current : _____ AC 50Hz/ AC 60Hz/ DC
- Coil Construction : Flying Lead/ Plug In Type/ Terminal Box/ Flameproof with Junction Box/ Intrinsically safe/ Latch type, Intrinsically safe/ Latch

Applicable Only when Terminal Box Solenoid or Flameproof Solenoid is selected

Cable Entry : 3/4" ET (F) / 1/2"NPT (F)/ M20 X 1.5

- Insulation Class : Standard Class F. ROTEX Solenoids can withstand Ambient (-) 20 ºC to + 80 ºC and Media Temperature (-) 20 ºC to + 70 ºC, Specify if class H is desired
- Approval : INDIAN, EUROPEAN, US, CANADA, BRAZIL, GOST etc.

ACCESSORIES:

1) Dust Cap (2) Sintered Bronze Muffler (3) Mounting Bolts (4) O-rings for Manifold.

Application:

Installation Details:

CONSTRAIN

- DIMENSIONS
- PORT ORIENTATION
- MOUNTING DIMENSIONS
- FUNCTIONALITY

Provide model number, manufactures name and address of the existing solenoid Valve/ Valve of other make. If possible you may e-mail the photograph of the solenoid Valve/ Valve.

REQUIREMENT

One time/ Regular

One time Quantity : ..... Nos.

Regular Qty : ..... Nos./ Month/ Quarter

CONTACT DETAILS

Please provide us your Name, Designation, Division, Name and Address of your Organization, Telephone and Fax Number, E-mail Address, Mobile Number.

NOTE

1) If any more information is available with you, please provide the same.

TYPE	Printed Page Number	PDF Page Number	TYPE	Printed Page Number	PDF Page Number	TYPE	Printed Page Number	PDF Page Number	TYPE	Printed Page Number	PDF Page Number
3001	302	270	21104	111	73	24212	85	46	32301	143	109
3002	302	270	21107	254	223	26106	361	327	33101	145	111
3012	292	260	21109	113	75	26106D	365	331	33101	147	113
3013	292	260	21201	97	59	26108	359	325	33123	203	172
3068	294	262	21201	214	183	26108D	363	329	50401	315	281
3072	295	263	21202	97	59	26114	367	333	50401	337	304
3204	288	256	21202	214	183	30106	309	275	50402	315	281
3205	290	258	21203	97	59	30111	189	157	51400	197	166
3224	287	255	21204	111	73	30111	214	183	51400	214	183
3274	288	256	22101	97	59	30112	189	157	51400	155	121
3275	290	258	22101	214	183	30125	117	79	51401	214	183
3318	300	268	23101	105	67	30125	214	183	51401	155	121
3319	300	268	23102	107	69	30126	117	79	51402	155	121
3322	298	266	23103	101	63	30127	254	223	51404	197	166
3359	380	346	23103	214	183	30138	313	279	51408	177	146
3383	380	346	23104	103	65	30138LW	329	296	51412	177	146
3400	299	267	23104	214	183	30150	381	347	51416	179	148
5004	303	271	23201	107	69	30152	149	115	51420	179	148
7204	382	348	23203	101	63	30170	127	90	51424	317	283
7205	382	348	23203	214	183	30201	117	79	51427	254	223
7210	381	347	23204	103	65	30206	117	79	51432	171	140
7211	381	347	23204	214	183	30211	189	157	51432	214	183
7232	382	348	24100	95	57	30212	189	157	51432	155	121
8204	384	350	24100	214	183	30252	149	115	51433	214	183
8205	384	350	24101	85	46	30270	127	90	51433	155	121
8210	384	350	24101	214	183	30301	214	183	51434	155	121
8211	384	350	24102	85	46	30301	117	79	51435	173	142
8232	384	350	24102	214	183	30308	129	92	51440	163	131
9204	384	350	24103	85	46	30309	129	92	51440	214	183
9205	384	350	24103	214	183	30310	117	79	51441	163	131
9210	384	350	24106	349	314	30316	193	161	51441	214	183
9211	384	350	24106	373	339	30317	193	161	51442	319	285
9232	384	350	24106A	349	314	30318	311	277	51442	337	304
20101	73	33	24106D	355	320	30329	129	92	51445	201	170
20101	214	183	24106TM	375	341	30332	193	161	51450	337	304
20105	129	92	24108	345	310	30333	129	92	51450	321	287
20106	129	92	24108	373	339	30334	133	97	52400	155	121
20108	185	153	24108D	353	318	30370	127	90	52433	155	121
20116	109	71	24108TM	374	340	31115	254	223	53400	167	136
20123	73	33	24109	85	46	31119	214	183	53400	205	174
20124	73	33	24110	286	254	31119	135	100	53402	167	136
20126	73	33	24112	85	46	31119	147	113	53402	171	140
20126V1	73	33	24113	349	314	31120	214	183	53402	205	174
20159	369	335	24114	357	322	31120	135	100	53440	169	138
20170	83	44	24114	373	339	31121	135	100	53445	207	176
20172	91	53	24114G	357	322	31122	151	117	57400	197	166
20201	79	40	24114G	373	339	31123	195	164	57400	159	127
20201	214	183	24114TM	375	341	31124	254	223	57400	292	260
20202	79	40	24115	95	57	31205	195	164	57401	159	127
20205	129	92	24115	214	183	31206	135	100	57402	159	127
20206	129	92	24117	351	316	31207	151	117	57404	171	140
20208	185	153	24118	347	312	31209	214	183	57404	214	183
20209	185	153	24201	85	46	31209	135	100	57404	159	127
20270	83	44	24201	214	183	31210	214	183	57405	214	183
21101	97	59	24202	85	46	31210	135	100	57405	159	127
21101	214	183	24202	214	183	31301	214	183	57406	159	127
21102	97	59	24203	85	46	31301	139	105	57407	173	142
21102	214	183	24203	214	183	32101	147	113	57408	159	127
21103	97	59	24209	85	46	32301	214	183	57409	159	127

TYPE	Printed Page Number	PDF Page Number
57410	159	127
57424	197	166
57440	165	133
57440	214	183
57441	165	133
57441	214	183
57442	319	285
57442	337	304
57445	201	170
57450	321	287
57450	337	304
58440	169	138
58445	207	176
201A	77	38
201B	77	38
201C	77	38
202A	77	38
202B	77	38
202C	77	38
209F	93	55
209G	93	55
209H	93	55
209I	93	55
209J	93	55
209K	93	55
209L	93	55
209M	93	55
211A	77	38
211B	77	38
211C	77	38
301A	123	86
301B	123	86
301C	123	86
302A	123	86
302B	123	86
302C	123	86
30318LW	327	294
303A	123	86
303B	123	86
303C	123	86
304A	125	88
304B	125	88
305A	125	88
305B	125	88
3275I	290	258
3318MM	300	268
3318MN	300	268
3319MM	300	268
3319MN	300	268
51442IS	333	300
51450IS	335	302
51450LW	331	298
57442IS	333	300
57450IS	335	302
57450LW	331	298
7210MR	383	349
GOV1	378	344
GOV2	378	344
I2001	218	187
I3001	218	187
I3002	218	187
I3003	218	187
I3004	218	187
I3005	218	187
I3006	218	187
I3007	218	187
I5001	218	187
I5002	218	187
I5003	218	187
I5004	218	187
I5005	218	187
I5006	218	187
L2001	240	209
L2002	240	209
L2003	250	209
L2005	250	209
L3001	240	209
L3002	240	209
L3003	240	209
L3004	240	209
L3005	240	209
L3006	240	209
L3007	240	209
L3009	250	219
L3010	250	219
L3011	250	219
L3012	250	219
L3013	250	219
L3014	250	219
L3015	240	209
L3016	240	209
L3017	250	219
L3018	250	219
L3019	250	219
L3019	250	219
L3020	240	209
L5004	250	219
L5005	250	219
L5008	250	219
M2001	236	205
M2002	236	205
M2003	230	199
M2004	230	199
M2005	230	199
M2006	230	199
M3001	236	205
M3002	236	205
M3003	236	205
M3004	236	205
M3005	230	199
M3006	230	199
M3007	230	199
M3008	230	199
M3009	230	199
M3010	230	199
M3011	236	205
M3012	230	199
M3013	236	205
L5006	250	219
P3017	245	214
M3014	234	203
M3016	234	203
M3015	233	202
M5001	236	205
M5002	236	205
M5003	236	205
M5004	230	199
M5005	230	199
M5006	230	199
MF01, MF02	209	178
MF03 TO MF15	210	179
MF11 TO MF15	211	180
MF16 TO MF18	212	181
MF37	371	337
MF38	371	337
P3001	245	214
P3002	245	214
P3003	245	214
P3004	245	214
P3005	245	214
P3006	245	214
P3007	245	214
P3008	245	214
P3009	245	214
P3010	245	214
P3011	245	214
P5001	245	214
P5002	245	214
P5003	245	214
P5004	245	214
P5005	245	214
P5006	245	214
P5007	245	214
P5008	245	214
P5009	245	214
P5010	245	214
P5011	245	214
P5012	245	214
VB26	296	264
VB4	296	264
VB9	296	264
VAD213NC	323	290
VAD213NCFC	325	292
VAD214NC	323	290
VAD214NCFC	325	292